Hammond
Power Solutions

LR 3902

DRY TYPE
TRANSFORMER
77U5
E112313
LISTED

GUELPH, ONT. BARABOO,WI COMPTON, CA MONTERREY, MX

THREE PHASE DRY TYPE DRIVE ISOLATION TRANSFORMER
TRANSFORMATEUR TRIPHASÉ POUR VARIATEUR DE VITESSE DE MOTEURS

HV/HT	230V
BIL	–
TERM. BORNES	H1 H2 H3

VOLTS	CURRENT COURANT	% RATED VOLTAGE % TENSION NOMINALE	CONNECTION EACH PHASE CONNEXION PAR PHASE
242	418	105	1
230	439	100	2
218	462	95	3

LV/BT	230Y/133V
BIL	–
TERM. BORNES	X0 X1 X2 X3

Cust. Ref. Réf. du client	
Serial No. No. de série	
Part No. No. de pièce	DM175CC
kVA	175
TYPE	K
Cooling Refroidissement	ANN
Temp. Rise Échauffement	150 ° C
Temp. Class Classe de Temp.	220 ° C
Frequency Fréquence	60 Hz
Impédance % @ 170 °C	6.2
Encl. Type Type de boîtier	3R
Wt Poids lbs/kg	975/443
Winding Enroulement	AL

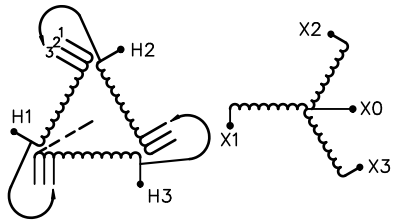

SPACINGS BETWEEN ANY VENTILATED ENCLOSURE PANEL AND ANY ADJACENT WALL SHALL BE A MINIMUM OF 5 INCHES

d0031025b

8 03423 00397 5

TITLE:	3PH DRIVE TRANSFORMER NAMEPLATE INFORMATION			
2	21/07/16	PP	EDB UPDATE	DES: GPATEL
1	14/06/04	GP	HCN: 42500	DATE: 05/08/17
NO.	DATE	BY	REVISION	SCALE: NTS

Hammond Power Solutions Inc.

SHEET 1 OF 2

EDBDM175CC

2.0 jwen 2021/07/16 15:10

FRONT VIEW

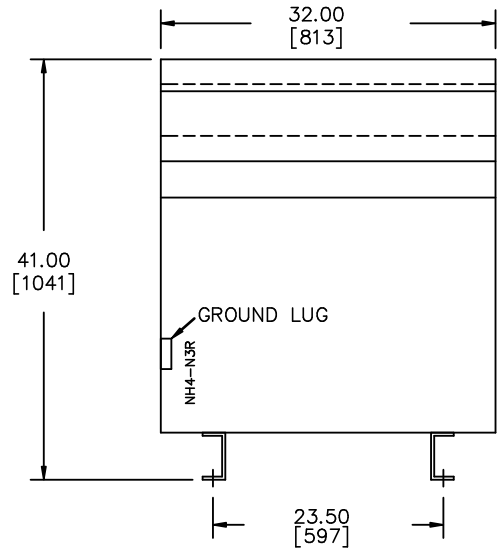

SIDE VIEW

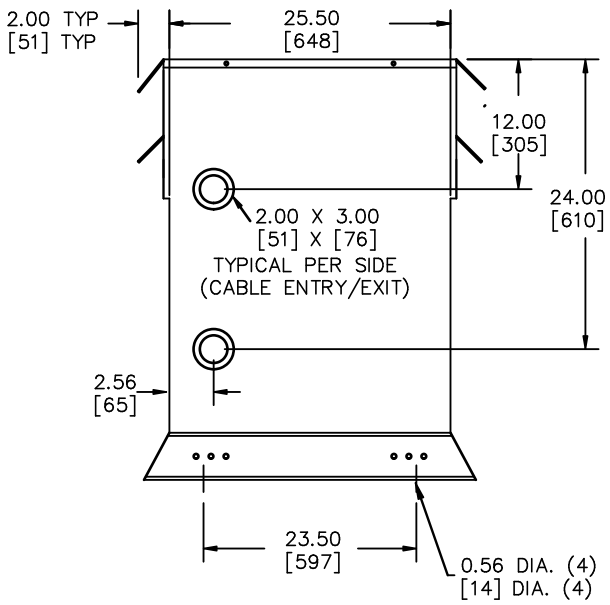

All Dimensions in inches[mm]

ENCLOSURE COLOR :ANSI 61 GREY – OUTDOOR

H.V.1. TERMINAL DETAIL

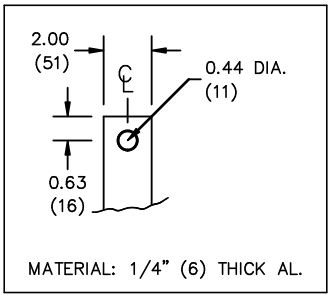

L.V.1. TERMINAL DETAIL

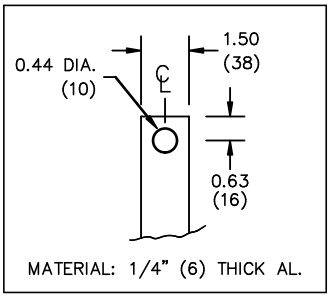

CUSTOMER NOTES:

- HV1 TERMINATED AT TOP FRONT
- LV1 TERMINATED AT BOTTOM FRONT
- C/W 1–"NC"– THERMOSTAT PER COIL CONNECTED TO T.B.

Hammond Power Solutions Inc.

TITLE: 3PH DRIVE TRANSFORMER

NO.	DATE	BY	REVISION	SCALE: NTS
2	21/07/16	PP	EDB UPDATE	DES: GPATEL
1	14/06/04	GP	HCN: 42500	DATE: 05/08/17

SHEET 2 OF 2

EDBDM175CC

2.0 jwen 2021/07/16 15:10