Hammond Power Solutions

LR 3902

DRY TYPE TRANSFORMER 77U5 E112313 LISTED

GUELPH, ONT. BARABOO,WI COMPTON, CA MONTERREY, MX

THREE PHASE DRY TYPE DRIVE ISOLATION TRANSFORMER
TRANSFORMATEUR TRIPHASÉ POUR VARIATEUR DE VITESSE DE MOTEURS

HV/HT	480V
BIL	–
TERM. BORNES	H1 H2 H3

VOLTS	CURRENT COURANT	% RATED VOLTAGE % TENSION NOMINALE	CONNECTION EACH PHASE CONNEXION PAR PHASE
504	200	105	1
480	210	100	2
456	222	95	3

LV/BT	240Y/139V
BIL	–
TERM. BORNES	X0 X1 X2 X3

Cust. Ref. Réf. du client	
Serial No. No. de série	
Part No. No. de pièce	DM175KDC
kVA	175
TYPE	K
Cooling Refroidissement	ANN
Temp. Rise Échauffement	150 ° C
Temp. Class Classe de Temp.	220 ° C
Frequency Fréquence	60 Hz
Impédance % @ 170 °C	5.8
Encl. Type Type de boîtier	3R
Wt Poids lbs/kg	1100/499
Winding Enroulement	CU

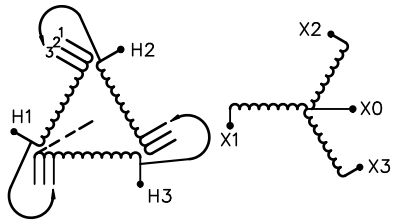

SPACINGS BETWEEN ANY VENTILATED ENCLOSURE PANEL AND ANY ADJACENT WALL SHALL BE A MINIMUM OF 5 INCHES EXCEPT WHEN WALL MOUNTED USING APPROVED WALL MOUNTING KIT

d0031102b

8 03423 00404 0

Hammond Power Solutions Inc.

TITLE: 3PH DRIVE TRANSFORMER NAMEPLATE INFORMATION

NO.	DATE	BY	REVISION	
1	21/07/16	PP	EDB UPDATE	DES: RMOVVA
				DATE: 17/07/12
				SCALE: NTS

SHEET 1 OF 2

EDBDM175KDC

1.0 jwen 2021/07/16 15:11

FRONT VIEW

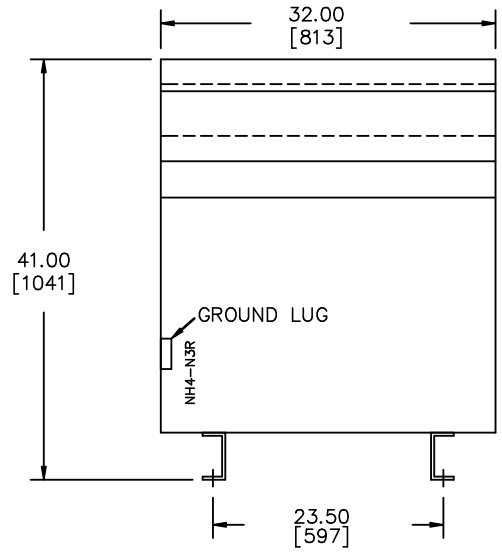

SIDE VIEW

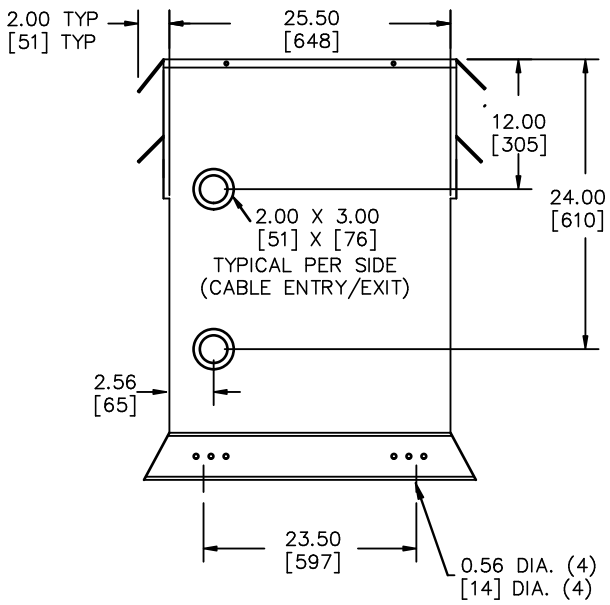

All Dimensions in inches[mm]

ENCLOSURE COLOR :ANSI 61 GREY – OUTDOOR

HV TERMINAL DETAIL

MECHANICAL TYPE LUGS INCLUDED
SUITABLE FOR 600MCM–2 CU/AL
CONDUCTORS
1 CONDUCTOR PER PHASE

LV TERMINAL DETAIL

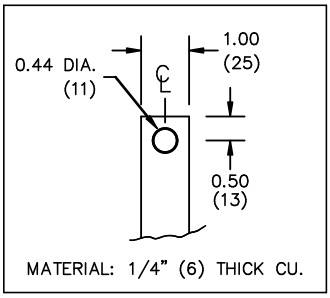

MATERIAL: 1/4" (6) THICK CU.

CUSTOMER NOTES:

– HV TERMINATED AT TOP FRONT
– LV TERMINATED AT BOTTOM FRONT
– C/W 1–"NC"– THERMOSTAT PER COIL CONNECTED TO T.B.

Hammond Power Solutions Inc.

TITLE: 3PH DRIVE TRANSFORMER

NO.	DATE	BY	REVISION
1	21/07/16	PP	EDB UPDATE

DES: RMOVVA
DATE: 17/07/12
SCALE: NTS

SHEET 2 OF 2

EDBDM175KDC

1.0 jwen 2021/07/16 15:11