F 133x79

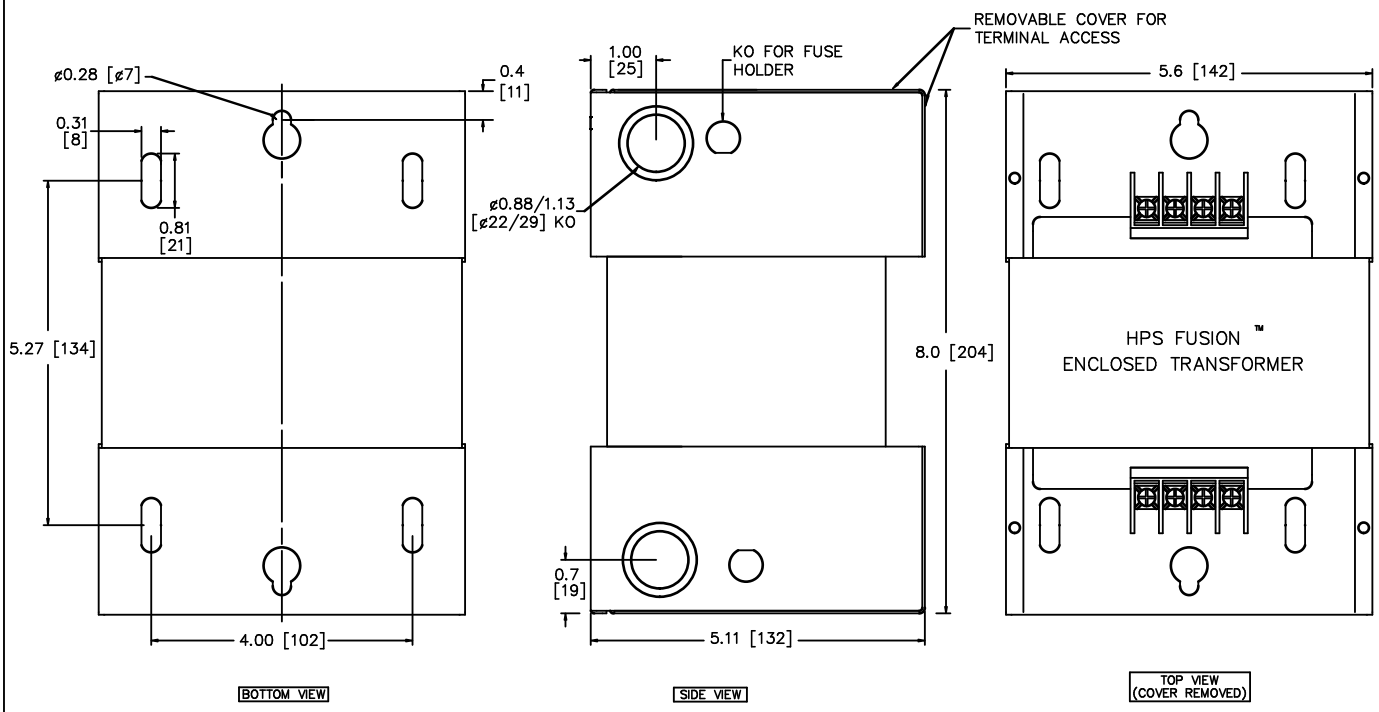

TOLERANCE +/− 0.1 IN [+/−2.5 MM]
ALL DIMENSIONS IN INCHES [MM]

*OPTIONAL FUSEHOLDER KIT (P/N FSFH1) WILL ADD 0.71"[18 MM] TO THE WIDTH

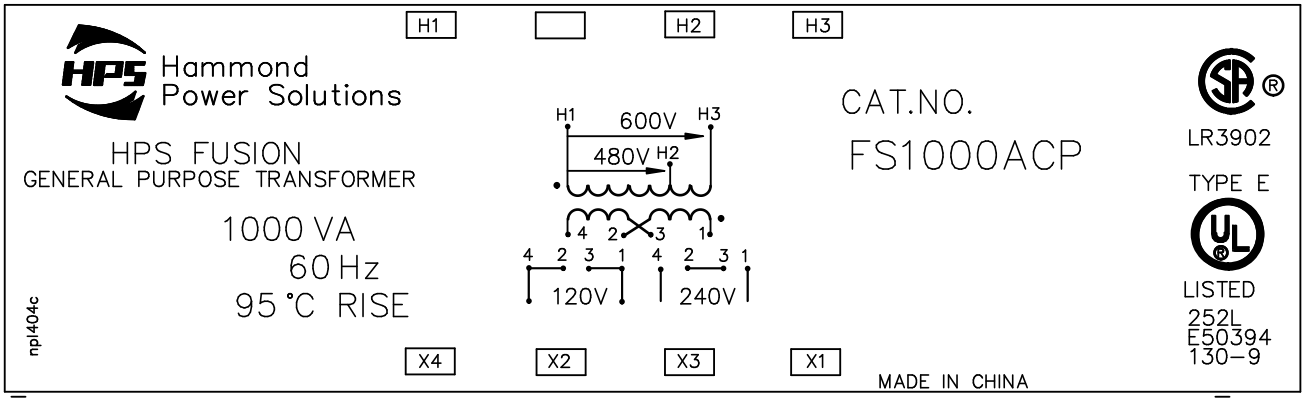

NOTES:

Hammond Power Solutions Inc.	TITLE: 1 PH ENCLOSED GENERAL PURPOSE TX				SHEET 1 OF 1
				DES: WWONG	EDBFS1000ACP
				DATE: 10/05/19	
NO.	DATE	BY	REVISION	SCALE: NTS	

0.3 wwong 2021/05/31 14:38