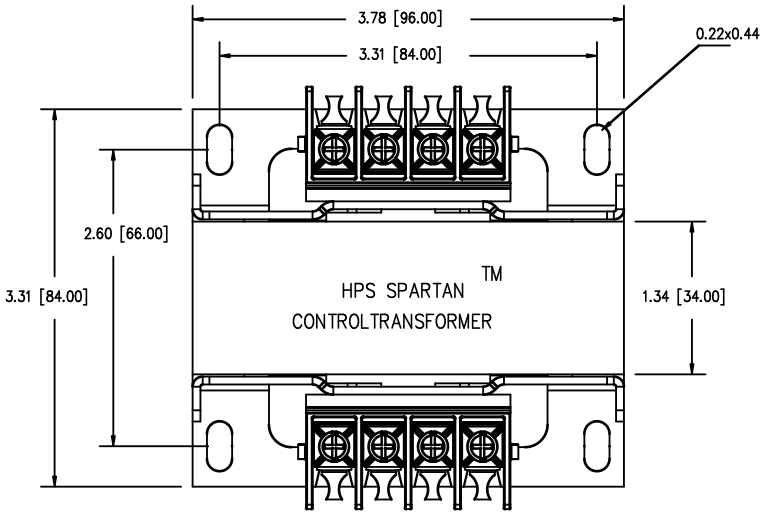

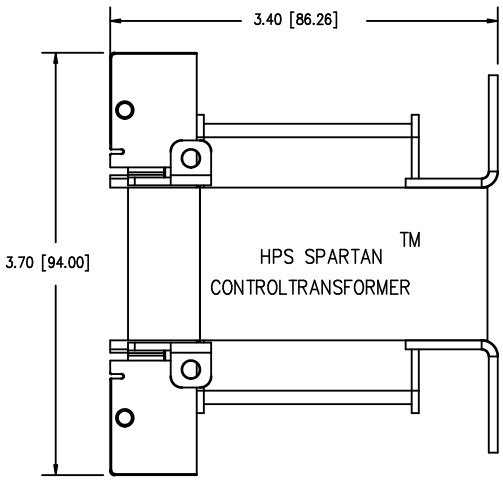

ALL DIMENSIONS ARE IN INCHES
* TOLERANCES STD. + / − 0.1 INCHES [+ / − 3 MM]

* OPTIONAL FUSEBLOCK ADAPTER KIT (P/N SPFBAK1) WILL ADD 0.38"[9.65] TO THE HEIGHT

* OPTIONAL PRIMARY AND SECONDARY FINGERGUARDS (P/N SPFG1) WILL ADD 0.19"[4.9] TO THE HEIGHT AND 0.38"[9.65] TO THE DEPTH

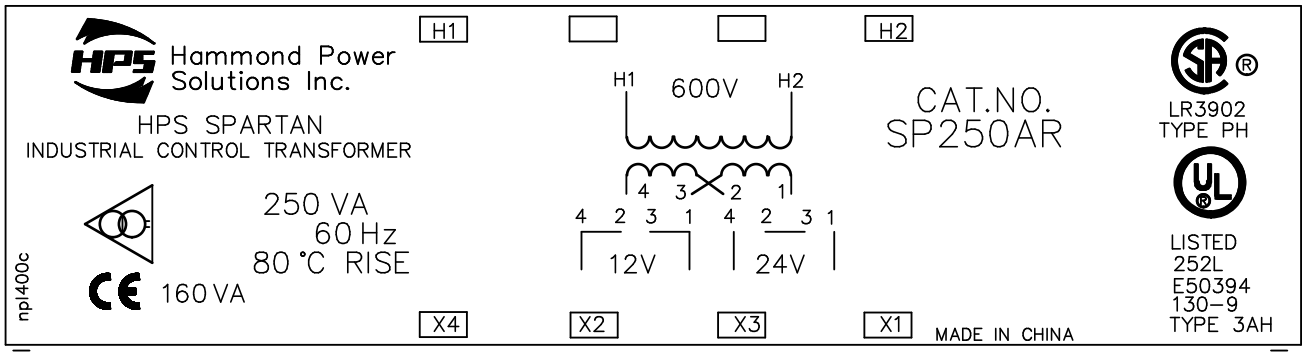

NOTES:

Hammond Power Solutions Inc.	TITLE: SPARTAN 1 PHASE CONTROL TRANSFORMER				SHEET 1 OF 1
				DES: WWONG	EDBSP250AR
				DATE: 09/10/19	
	NO.	DATE	BY	REVISION	SCALE: NTS

0.1 wwong 2009/12/21 16:21