







HPS Spartan™

Industrial Open Core & Coil Control Transformer

Hammond Power Solutions

HPS Spartan

Transformateur de contrôle type ouvert

Hammond Power Solutions Inc. (HPS) is the North American leader for the design and manufacture of high quality standard and custom electrical dry-type transformers and related engineered magnetic devices. Our global footprint has expanded with the addition of facilities in Europe & India. HPS excels at designing products that have very specific application constraints. Having an extensive engineering resource, HPS offers the broadest range of electrical products in the industry and as a result, the company has grown in many diverse markets and provides services to many global leaders.

Hammond Power Solutions Inc., with its headquarters in Guelph, Ontario, Canada, operates out of ten facilities:

Guelph, Ontario
Baraboo, Wisconsin
Hyderabad, India
Walkerton, Ontario
Compton, California
Monterrey, Mexico
Granby, Quebec

QUALITY

HPS has been highly regarded for quality products and service since inception. Customers have come to rely on our products and services. Extensive testing programs and an exemplary field service record ensures that HPS products not only meet all the standards necessary, but more importantly, fulfill customers expectations and requirements.

DESIGN CAPABILITIES

HPS engineering services are located throughout our manufacturing facilities. Our designs are cost effective and our transformers are built with modern manufacturing techniques. We particularly emphasize our Value Added Engineering whereby our design staff will interface with your team to produce the optimum transformer. Our 3-D modelling design and CAD facilities permits quick and effective communication when time is vital.

CUSTOMERS

Through our extensive standard and custom product offering, HPS is able to provide a convenient one source solution for a wide variety of markets

Our engineering design staff work directly with you to produce the most optimum and cost effective solution for your application. We will design to your specification requirements and all transformers are built with modern manufacturing techniques.

Our innovative products are used in the most demanding applications requiring performance, reliability, and energy efficiency.





MARKETS

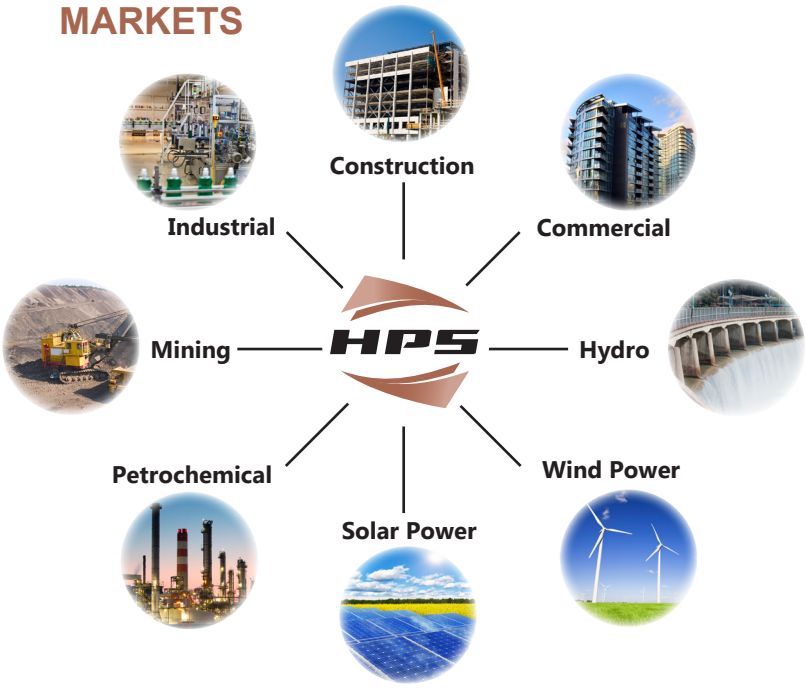

Hammond Power Solutions

VALUE

The HPS Spartan series of industrial control transformers are ideally suited for general purpose, industrial and light duty loads.

Designed for applications where high inrush or machine tool duty are not necessary, the HPS Spartan control transformer offers an efficient and economical solution.

APPLICATIONS


Process Controls


Panel Shops


Machine Automation


Control Boards


HVAC Panels


Power Timers, Solenoids and Controllers

INDUSTRIES


Commercial


Agriculture


Automation

APPROVALS

- Meets NEMA standards
- CSA Certified
- UL Listed
- CE Marked

FEATURES AND BENEFITS

- Multi-voltage primary and secondary models increase range of application per unit
- Standard molded terminal blocks or primary and secondary up to 3000VA (30A) units
- Solid terminal block with standard combination screw connection
- 50/60 Hz (60 Hz on SP***ACP and SP***AR)
- Copper wound coils with high dielectric strength insulation
- Bolted core construction
- Bolt-on mounting brackets
- Vacuum Impregnated with Polyester Resin and oven cured
- Seismically qualified according to International Building Code (IBC) 2018, and the American Society of Civil Engineers ASCE 7-10 specifications, with the following design parameters:
  Spectral acceleration: S_{DS} <= 2.0g
  Importance factor: I_p = 1.5
  Attachment/height ratio: z/h = 1.0"
  O.S.H.P.D California Certified
- Superior insulating materials. The HPS Spartan series transfomer offers the following insulation systems:
  - 130°C (80°C rise) up to 1500 VA
  - 180°C (115°C rise) 2000 VA to 5000 VA
- All units supplied with primary and secondary voltage links/jumpers
- Optional finger guards available[1]
- Optional fuse block adapter kit available[1]
- Supplied with trilingual installation and wiring instruction sheets
- "Premium Packaging"[1] featuring:
  - Premium fluted cartons
  - Custom molded foam inserts
  - Easy removal and repacking
  - Industry's best box label
- 15 year warranty

[1] up to and including 3000VA or 30 amps

HPS Spartan

Transformateur de contrôle type ouvert

GROUP A

Primary Voltage: **600/480** | 575/460 | 550/440
Secondary Voltage: **120 x 240** | 115 x 230 | 110 x 220

60 Hertz

VA Rating	CE VA Rating	Catalog Number	Mtg. Fig.	Output Amps	Overall Dimensions A	B	C	Mounting Centers D	E	Mounting Slot G X H	Height with Finger Guard	Height with Fuse Block Adapter	Approx. Ship Weight Lbs.
50	50	**SP50ACP**	A	0.42/0.21	2.60 [66.04]	3.82 [97.03]	2.60 [66.04]	2.13 [54.11]	2.64 [67.06]	0.22 x 0.44 [5.59 x 11.18]	2.98 [75.70]	2.79 [70.87]	2.2 [1.0]
100	100	**SP100ACP**	A	0.83/0.42	2.99 [75.95]	3.74 [95.00]	2.85 [72.39]	2.52 [64.01]	2.60 [66.04]	0.22 x 0.44 [5.59 x 11.18]	3.23 [82.05]	3.04 [77.22]	3.3 [1.5]
150	150	**SP150ACP**	A	1.25/0.63	2.99 [75.95]	4.29 [108.97]	2.85 [72.39]	2.52 [64.01]	3.15 [80.01]	0.22 x 0.44 [5.59 x 11.18]	3.23 [82.05]	3.04 [77.22]	4.4 [2.0]
250	160	**SP250ACP**	A	2.08/1.04	3.78 [96.02]	4.09 [103.89]	3.40 [86.36]	3.31 [84.08]	2.99 [75.95]	0.22 x 0.44 [5.59 x 11.18]	3.78 [96.02]	3.59 [91.19]	6.4 [2.9]
350	250	**SP350ACP**	A	2.92/1.46	3.78 [96.02]	4.49 [114.05]	3.40 [86.36]	3.31 [84.08]	3.39 [86.11]	0.22 x 0.44 [5.59 x 11.18]	3.78 [96.02]	3.59 [91.19]	7.5 [3.4]
500	300	**SP500ACP**	A	4.17/2.08	4.49 [114.05]	4.69 [119.13]	3.78 [96.02]	3.78 [96.02]	3.66 [92.97]	0.31 x 0.81 [7.88 x 20.58]	4.16 [105.67]	3.97 [100.84]	11.0 [5.0]
750	500	**SP750ACP**	A	6.25/3.13	5.25 [133.35]	5.08[1] [129.06]	4.37 [111.00]	4.50 [114.30]	4.06 [103.13]	0.31 x 0.81 [7.88 x 20.58]	4.75 [120.65]	4.56 [115.83]	18.0 [8.1]
1000	650	**SP1000ACP**	A	8.33/4.17	5.25 [133.35]	5.47[1] [138.97]	4.37 [111.00]	4.50 [114.30]	4.45 [113.03]	0.31 x 0.81 [7.88 x 20.58]	4.75 [120.65]	4.56 [115.83]	21.0 [9.5]
1500	1000	**SP1500ACP**	A	12.5/6.25	5.25 [133.35]	6.85[1] [174.02]	4.37 [111.00]	4.50 [114.30]	5.83 [148.09]	0.31 x 0.81 [7.88 x 20.58]	4.56 [115.83]	4.37 [111.00]	28.0 [12.6]
2000	1300	**SP2000ACP**	A	16.7/8.33	6.38 [162.06]	5.87[1] [149.13]	5.31 [134.88]	5.75 [146.05]	4.84 [122.94]	0.31 x 0.81 [7.88 x 20.58]	5.69 [144.53]	5.50 [139.70]	34.0 [15.3]
3000	2000	**SP3000ACP**	A	25.0/12.5	7.50 [190.50]	7.50 [190.50]	6.50 [165.10]	6.30 [160.02]	6.85 [173.99]	0.44 x 1.00 [11.18 x 25.4]	6.50 [165.10]	6.50 [165.10]	60.0 [27.0]
5000	3000	**SP5000ACP**	C	41.7/20.8	8.98 [228.10]	9.88 [250.96]	7.76 [197.11]	7.40 [187.96]	7.13 [181.11]	0.44 x 1.00 [11.18 x 25.4]	N/A	N/A	93.0 [41.9]

Primary and Secondary voltage links/jumpers supplied standard with all transformers.
Please contact your HPS representative for other requests.
[1] Note: For 750 through 2000 VA units actual overall depth is 0.24" plus the value in column B.
*** See page 10 for dimensional drawings.**

Dimensions in Inches [mm]
Weight in [kg]

GROUP B

Primary Voltage: **600** | 575 | 550
Secondary Voltage: **12 x 24** | 11.5 x 23 | 11 x 22

50/60 Hertz

VA Rating	CE VA Rating	Catalog Number	Mtg. Fig.	Output Amps	Overall Dimensions A	B	C	Mounting Centers D	E	Mounting Slot G X H	Height with Finger Guard	Height with Fuse Block Adapter	Approx. Ship Weight Lbs.
50	50	**SP50AR**	A	4.17/2.08	2.60 [66.04]	3.23 [82.05]	2.60 [66.04]	2.13 [54.11]	2.05 [52.07]	0.22 x 0.44 [5.59 x 11.18]	2.98 [75.70]	2.79 [70.87]	1.5 [0.7]
100	100	**SP100AR**	A	8.33/4.17	2.99 [75.95]	3.74 [95.00]	2.85 [72.39]	2.52 [64.01]	2.60 [66.04]	0.22 x 0.44 [5.59 x 11.18]	3.23 [82.05]	3.04 [77.22]	3.3 [1.5]
150	150	**SP150AR**	A	12.5/6.25	2.99 [75.95]	4.09 [103.89]	2.85 [72.39]	2.52 [64.01]	2.95 [74.93]	0.22 x 0.44 [5.59 x 11.18]	3.23 [82.05]	3.04 [77.22]	3.9 [1.8]
250	160	**SP250AR**	A	20.8/10.4	3.78 [96.02]	3.70 [93.98]	3.40 [86.36]	3.31 [84.08]	2.60 [66.04]	0.22 x 0.44 [5.59 x 11.18]	3.78 [96.02]	3.59 [91.19]	5.2 [2.4]
350	250	**SP350AR**	A	29.2/14.6	3.78 [96.02]	4.29 [108.97]	3.40 [86.36]	3.31 [84.08]	3.19 [81.03]	0.22 x 0.44 [5.59 x 11.18]	3.78 [96.02]	3.59 [91.19]	7.1 [3.2]
500	300	**SP500AR**	B	41.7/20.8	4.49 [114.05]	5.08 [129.04]	3.78 [96.02]	3.78 [96.02]	3.27 [83.06]	0.31 x 0.81 [7.88 x 20.58]	4.16 [105.67]	3.97 [100.84]	9.9 [4.5]

Primary and Secondary voltage links/jumpers supplied standard with all transformers.
Please contact your HPS representative for other requests.
*** See page 10 for dimensional drawings.**

Dimensions in Inches [mm]
Weight in [kg]

GROUP C

Primary Voltage: **240 x 480** | 230 x 460 | 220 x 440
Secondary Voltage: **120 x 240** | 115 x 230 | 110 x 220

50/60 Hertz

VA Rating	CE VA Rating	Catalog Number	Mtg. Fig.	Output Amps	Overall Dimensions A	B	C	Mounting Centers D	E	Mounting Slot G X H	Height with Finger Guard	Height with Fuse Block Adapter	Approx. Ship Weight Lbs.
50	50	**SP50MQMJ**	A	0.42/0.21	2.60 [66.04]	3.35 [85.09]	2.60 [66.04]	2.13 [54.11]	2.17 [55.12]	0.22 x 0.44 [5.59 x 11.18]	2.98 [75.70]	2.79 [70.87]	1.7 [0.8]
100	100	**SP100MQMJ**	A	0.83/0.42	2.99 [75.95]	3.74 [95.00]	2.85 [72.39]	2.52 [64.01]	2.60 [66.04]	0.22 x 0.44 [5.59 x 11.18]	3.23 [82.05]	3.04 [77.22]	3.0 [1.4]
150	150	**SP150MQMJ**	A	1.25/0.63	2.99 [75.95]	4.29 [108.97]	2.85 [72.39]	2.52 [64.01]	3.15 [80.01]	0.22 x 0.44 [5.59 x 11.18]	3.23 [82.05]	3.04 [77.22]	4.3 [2.0]
250	160	**SP250MQMJ**	A	2.08/1.04	3.78 [96.02]	4.09 [103.89]	3.40 [86.36]	3.31 [84.08]	2.99 [75.95]	0.22 x 0.44 [5.59 x 11.18]	3.78 [96.02]	3.59 [91.19]	6.5 [3.0]
350	250	**SP350MQMJ**	A	2.92/1.46	3.78 [96.02]	4.69 [119.13]	3.40 [86.36]	3.31 [84.08]	3.58 [90.94]	0.22 x 0.44 [5.59 x 11.18]	3.78 [96.02]	3.59 [91.19]	8.2 [3.7]
500	300	**SP500MQMJ**	A	4.17/2.08	4.49 [114.05]	4.69 [119.13]	3.78 [96.02]	3.78 [96.02]	3.66 [92.97]	0.31 x 0.81 [7.88 x 20.58]	4.16 [105.67]	3.97 [100.84]	11.0 [5.0]
750	500	**SP750MQMJ**	A	6.25/3.13	5.25 [133.35]	4.69[1] [119.16]	4.37 [111.00]	4.50 [114.30]	3.66 [92.97]	0.31 x 0.81 [7.88 x 20.58]	4.75 [120.65]	4.56 [115.83]	16.0 [7.2]
1000	650	**SP1000MQMJ**	A	8.33/4.17	5.25 [133.35]	5.47[1] [138.97]	4.37 [111.00]	4.50 [114.30]	4.45 [113.03]	0.31 x 0.81 [7.88 x 20.58]	4.75 [120.65]	4.56 [115.83]	21.0 [9.5]
1500	1000	**SP1500MQMJ**	A	12.5/6.25	5.25 [133.35]	6.85[1] [174.02]	4.37 [111.00]	4.50 [114.30]	5.83 [148.09]	0.31 x 0.81 [7.88 x 20.58]	4.75 [120.65]	4.56 [115.83]	28.0 [12.6]
2000	1300	**SP2000MQMJ**	A	16.7/8.33	6.38 [162.06]	5.87[1] [149.13]	5.31 [134.88]	5.75 [146.05]	4.84 [122.94]	0.31 x 0.81 [7.88 x 20.58]	5.50 [139.70]	5.31 [134.88]	35.0 [15.8]
3000	2000	**SP3000MQMJ**	A	25.0/12.5	7.50 [190.50]	7.50 [190.50]	6.50 [165.10]	6.30 [160.02]	7.28 [184.92]	0.44 x 1.00 [11.18 x 25.4]	6.50 [165.10]	6.50 [165.10]	64.0 [28.8]
5000	3000	**SP5000MQMJ**	C	41.7/20.8	8.98 [228.10]	9.88 [250.96]	7.76 [197.11]	7.40 [187.96]	7.28 [184.92]	0.44 x 1.00 [11.18 x 25.4]	N/A	N/A	97.0 [43.7]

Primary and Secondary voltage links/jumpers supplied standard with all transformers.
Please contact your HPS representative for other requests.
[1] Note: For 750 through 2000 VA units actual overall depth is 0.24" plus the value in column B.
*** See page 10 for dimensional drawings.**

Dimensions in Inches [mm]
Weight in [kg]

GROUP D

Primary Voltage: **240 x 480** | 230 x 460 | 220 x 440
Secondary Voltage: **12 x 24** | 11.5 x 23 | 11 x 22

50/60 Hertz

VA Rating	CE VA Rating	Catalog Number	Mtg. Fig.	Output Amps	Overall Dimensions A	B	C	Mounting Centers D	E	Mounting Slot G X H	Height with Finger Guard	Height with Fuse Block Adapter	Approx. Ship Weight Lbs.
50	50	**SP50QR**	A	4.17/2.08	2.60 [66.04]	3.35 [85.09]	2.60 [66.04]	2.13 [54.11]	2.17 [55.12]	0.22 x 0.44 [5.59 x 11.18]	2.98 [75.70]	2.79 [70.87]	1.7 [0.8]
100	100	**SP100QR**	A	8.33/4.17	2.99 [75.95]	3.54 [89.92]	2.85 [72.39]	2.52 [64.01]	2.40 [60.96]	0.22 x 0.44 [5.59 x 11.18]	3.23 [82.05]	3.04 [77.22]	3.0 [1.4]
150	150	**SP150QR**	A	12.5/6.25	2.99 [75.95]	4.29 [108.97]	2.85 [72.39]	2.52 [64.01]	3.15 [80.01]	0.22 x 0.44 [5.59 x 11.18]	3.23 [82.05]	3.04 [77.22]	4.3 [2.0]
250	160	**SP250QR**	A	20.8/10.4	3.78 [96.02]	4.09 [103.89]	3.40 [86.36]	3.31 [84.08]	2.99 [75.95]	0.22 x 0.44 [5.59 x 11.18]	3.78 [96.02]	3.59 [91.19]	6.5 [3.0]
350	250	**SP350QR**	A	29.2/14.6	3.78 [96.02]	4.69 [119.13]	3.40 [86.36]	3.31 [84.08]	3.58 [90.94]	0.22 x 0.44 [5.59 x 11.18]	3.78 [96.02]	3.59 [91.19]	8.3 [3.8]
500	300	**SP500QR**	B	41.7/20.8	4.49 [114.05]	5.47 [138.94]	3.78 [96.02]	3.78 [96.02]	3.66 [92.97]	0.31 x 0.81 [7.88 x 20.58]	4.16 [105.67]	3.97 [100.84]	11.0 [5.0]

Primary and Secondary voltage links/jumpers supplied standard with all transformers.
Please contact your HPS representative for other requests.
*** See page 10 for dimensional drawings.**

Dimensions in Inches [mm]
Weight in [kg]

HPS Spartan
Transformateur de contrôle type ouvert

GROUP E

Primary Voltage: 380/347
Secondary Voltage: 120 x 240

50/60 Hertz

VA Rating	CE VA Rating	Catalog Number	Mtg. Fig.	Output Amps	Overall Dimensions A	Overall Dimensions B	Overall Dimensions C	Mounting Centers D	Mounting Centers E	Mounting Slot G X H	Height with Finger Guard	Height with Fuse Block Adapter	Approx. Ship Weight Lbs.
50	50	**SP50KHP**	A	0.42/0.21	2.60 [66.04]	3.35 [85.09]	2.60 [66.04]	2.13 [54.11]	2.17 [55.12]	0.22 x 0.44 [5.59 x 11.18]	2.98 [75.70]	2.79 [70.87]	1.7 [0.8]
100	100	**SP100KHP**	A	0.83/0.42	2.99 [75.95]	3.74 [95.00]	2.85 [72.39]	2.52 [64.01]	2.60 [66.04]	0.22 x 0.44 [5.59 x 11.18]	3.23 [82.05]	3.04 [77.22]	3.4 [1.6]
150	150	**SP150KHP**	A	1.25/0.63	2.99 [75.95]	4.29 [108.97]	2.85 [72.39]	2.52 [64.01]	3.15 [80.01]	0.22 x 0.44 [5.59 x 11.18]	3.23 [82.05]	3.04 [77.22]	4.4 [2.0]
250	160	**SP250KHP**	A	2.08/1.04	3.78 [96.02]	4.09 [103.89]	3.40 [86.36]	3.31 [84.08]	2.99 [75.95]	0.22 x 0.44 [5.59 x 11.18]	3.78 [96.02]	3.59 [91.19]	6.7 [3.1]
350	250	**SP350KHP**	A	2.92/1.46	3.78 [96.02]	4.69 [119.13]	3.40 [86.36]	3.31 [84.08]	3.58 [90.94]	0.22 x 0.44 [5.59 x 11.18]	3.78 [96.02]	3.59 [91.19]	8.4 [3.8]
500	300	**SP500KHP**	A	4.17/2.08	4.49 [114.05]	4.69 [119.13]	3.78 [96.02]	3.78 [96.02]	3.66 [92.97]	0.31 x 0.81 [7.88 x 20.58]	4.16 [105.67]	3.97 [100.84]	12.0 [5.4]
750	500	**SP750KHP**	A	6.25/3.13	5.25 [133.35]	4.69[1] [119.16]	4.37 [111.00]	4.50 [114.30]	3.66 [92.97]	0.31 x 0.81 [7.88 x 20.58]	4.75 [120.65]	4.56 [115.83]	17.0 [7.7]
1000	650	**SP1000KHP**	A	8.33/4.17	5.25 [133.35]	5.47 [138.97]	4.37 [111.00]	4.50 [114.30]	4.45 [113.03]	0.31 x 0.81 [7.88 x 20.58]	4.75 [120.65]	4.56 [115.83]	21.0 [9.5]
1500	1000	**SP1500KHP**	A	12.5/6.25	6.38 [162.06]	4.88[1] [123.98]	5.31 [134.88]	5.75 [146.05]	3.86 [98.05]	0.31 x 0.81 [7.88 x 20.58]	5.50 [139.70]	5.31 [134.88]	29.0 [13.1]

Primary and Secondary voltage links/jumpers supplied standard with all transformers.
Please contact your HPS representative for other requests.
Dimensions in Inches [mm]
Weight in [kg]
[1] Note: For 750 through 1500 VA units actual overall depth is 0.24" plus the value in column B.
*** See page 10 for dimensional drawings.**

GROUP F

Primary Voltage: 380/347
Secondary Voltage: 12 x 24

50/60 Hertz

VA Rating	CE VA Rating	Catalog Number	Mtg. Fig.	Output Amps	Overall Dimensions A	Overall Dimensions B	Overall Dimensions C	Mounting Centers D	Mounting Centers E	Mounting Slot G X H	Height with Finger Guard	Height with Fuse Block Adapter	Approx. Ship Weight Lbs.
50	50	**SP50KHR**	A	4.17/2.08	2.60 [66.04]	3.35 [85.09]	2.60 [66.04]	2.13 [54.11]	2.17 [55.12]	0.22 x 0.44 [5.59 x 11.18]	2.98 [75.70]	2.79 [70.87]	1.7 [0.8]
100	100	**SP100KHR**	A	8.33/4.17	2.99 [75.95]	3.74 [95.00]	2.85 [72.39]	2.52 [64.01]	2.60 [66.04]	0.22 x 0.44 [5.59 x 11.18]	3.23 [82.05]	3.04 [77.22]	3.3 [1.5]
150	150	**SP150KHR**	A	12.5/6.25	2.99 [75.95]	4.29 [108.97]	2.85 [72.39]	2.52 [64.01]	3.15 [80.01]	0.22 x 0.44 [5.59 x 11.18]	3.23 [82.05]	3.04 [77.22]	4.4 [2.0]
250	160	**SP250KHR**	A	20.8/10.4	3.78 [96.02]	4.09 [103.89]	3.40 [86.36]	3.31 [84.08]	2.99 [75.95]	0.22 x 0.44 [5.59 x 11.18]	3.78 [96.02]	3.59 [91.19]	6.4 [2.9]
350	250	**SP350KHR**	A	29.2/14.6	3.78 [96.02]	4.69 [119.13]	3.40 [86.36]	3.31 [84.08]	3.58 [90.94]	0.22 x 0.44 [5.59 x 11.18]	3.78 [96.02]	3.59 [91.19]	8.1 [3.7]
500	300	**SP500KHR**	B	41.7/20.8	4.49 [114.05]	5.47 [138.94]	3.78 [96.02]	3.78 [96.02]	3.66 [92.97]	0.31 x 0.81 [7.88 x 20.58]	4.16 [105.67]	3.97 [100.84]	11.0 [5.0]

Primary and Secondary voltage links/jumpers supplied standard with all transformers.
Please contact your HPS representative for other requests.
Dimensions in Inches [mm]
Weight in [kg]
*** See page 10 for dimensional drawings.**

GROUP G

Primary Voltage: 277
Secondary Voltage: 120

50/60 Hertz

VA Rating	CE VA Rating	Catalog Number	Mtg. Fig.	Output Amps	Overall Dimensions A	Overall Dimensions B	Overall Dimensions C	Mounting Centers D	Mounting Centers E	Mounting Slot G X H	Height with Finger Guard	Height with Fuse Block Adapter	Approx. Ship Weight Lbs.
50	50	**SP50NJ**	A	0.42	2.60 [66.04]	3.35 [85.09]	2.60 [66.04]	2.13 [54.11]	2.17 [55.12]	0.22 x 0.44 [5.59 x 11.18]	2.98 [75.70]	2.79 [70.87]	1.6 [0.8]
100	100	**SP100NJ**	A	0.83	2.99 [75.95]	3.54 [89.92]	2.85 [72.39]	2.52 [64.01]	2.40 [60.96]	0.22 x 0.44 [5.59 x 11.18]	3.23 [82.05]	3.04 [77.22]	3.2 [1.5]
150	150	**SP150NJ**	A	1.25	2.99 [75.95]	4.29 [108.97]	2.85 [72.39]	2.52 [64.01]	3.15 [80.01]	0.22 x 0.44 [5.59 x 11.18]	3.23 [82.05]	3.04 [77.22]	4.3 [2.0]
250	160	**SP250NJ**	A	2.08	3.78 [96.02]	4.09 [103.89]	3.40 [86.36]	3.31 [84.08]	2.99 [75.95]	0.22 x 0.44 [5.59 x 11.18]	3.78 [96.02]	3.59 [91.19]	6.4 [2.9]
350	250	**SP350NJ**	A	2.92	3.78 [96.02]	4.69 [119.13]	3.40 [86.36]	3.31 [84.08]	3.58 [90.94]	0.22 x 0.44 [5.59 x 11.18]	3.78 [96.02]	3.59 [91.19]	8.1 [3.7]
500	300	**SP500NJ**	A	4.17	4.49 [114.05]	4.69 [119.13]	3.78 [96.02]	3.78 [96.02]	3.66 [92.97]	0.31 x 0.81 [7.88 x 20.58]	4.16 [105.67]	3.97 [100.84]	11.0 [5.0]
750	500	**SP750NJ**	A	6.25	5.25 [133.35]	5.08[1] [129.06]	4.37 [111.00]	4.50 [114.30]	4.06 [103.13]	0.31 x 0.81 [7.88 x 20.58]	4.75 [120.65]	4.56 [115.83]	18.0 [8.1]
1000	650	**SP1000NJ**	A	8.33	5.25 [133.35]	5.47[1] [138.97]	4.37 [111.00]	4.50 [114.30]	4.45 [113.03]	0.31 x 0.81 [7.88 x 20.58]	4.75 [120.65]	4.56 [115.83]	20.0 [9.0]
1500	1000	**SP1500NJ**	A	12.50	5.25 [133.35]	6.85[1] [174.02]	4.37 [111.00]	4.50 [114.30]	5.83 [148.09]	0.31 x 0.81 [7.88 x 20.58]	4.75 [120.65]	4.56 [115.83]	29.0 [13.1]

Primary and Secondary voltage links/jumpers supplied standard with all transformers.
Please contact your HPS representative for other requests.
[1] Note: For 750 through 1500 VA units actual overall depth is 0.24" plus the value in column B.
*** See page 10 for dimensional drawings.**

Dimensions in Inches [mm]
Weight in [kg]

GROUP H

Primary Voltage: **120 x 240** || 115 x 230 || 110 x 220
Secondary Voltage: **12 x 24** || 11.5 x 23 || 11 x 22

50/60 Hertz

VA Rating	CE VA Rating	Catalog Number	Mtg. Fig.	Output Amps	Overall Dimensions A	Overall Dimensions B	Overall Dimensions C	Mounting Centers D	Mounting Centers E	Mounting Slot G X H	Height with Finger Guard	Height with Fuse Block Adapter	Approx. Ship Weight Lbs.
50	50	**SP50PR**	A	4.17/2.08	2.60 [66.04]	3.35 [85.09]	2.60 [66.04]	2.13 [54.11]	2.17 [55.12]	0.22 x 0.44 [5.59 x 11.18]	2.98 [75.70]	2.79 [70.87]	1.7 [0.8]
100	100	**SP100PR**	A	8.33/4.17	2.99 [75.95]	3.74 [95.00]	2.85 [72.39]	2.52 [64.01]	2.60 [66.04]	0.22 x 0.44 [5.59 x 11.18]	3.23 [82.05]	3.04 [77.22]	3.0 [1.4]
150	150	**SP150PR**	A	12.5/6.25	2.99 [75.95]	4.29 [108.97]	2.85 [72.39]	2.52 [64.01]	3.15 [80.01]	0.22 x 0.44 [5.59 x 11.18]	3.23 [82.05]	3.04 [77.22]	4.3 [2.0]
250	160	**SP250PR**	A	20.8/10.4	3.78 [96.02]	3.90 [99.06]	3.40 [86.36]	3.31 [84.08]	2.80 [71.12]	0.22 x 0.44 [5.59 x 11.18]	3.78 [96.02]	3.59 [91.19]	5.9 [2.7]
350	250	**SP350PR**	A	29.2/14.6	3.78 [96.02]	4.69 [119.13]	3.40 [86.36]	3.31 [84.08]	3.58 [90.94]	0.22 x 0.44 [5.59 x 11.18]	3.78 [96.02]	3.59 [91.19]	8.2 [3.7]
500	300	**SP500PR**	B	41.7/20.8	4.49 [114.05]	5.47 [138.94]	3.78 [96.02]	3.78 [96.02]	3.66 [92.97]	0.31 x 0.81 [7.88 x 20.58]	4.16 [105.67]	3.97 [100.84]	11.0 [5.0]

Primary and Secondary voltage links/jumpers supplied standard with all transformers.
Please contact your HPS representative for other requests.
*** See page 10 for dimensional drawings.**

Dimensions in Inches [mm]
Weight in [kg]

HPS Spartan

Transformateur de contrôle type ouvert

GROUP I

Primary Voltage: **208 x 416** | 200 x 400 | 190 x 380
Secondary Voltage: **120 x 240** | 115 x 230 | 110 x 220

50/60 Hertz

VA Rating	CE VA Rating	Catalog Number	Mtg. Fig.	Output Amps	Overall Dimensions A	B	C	Mounting Centers D	E	Mounting Slot G X H	Height with Finger Guard	Height with Fuse Block Adapter	Approx. Ship Weight Lbs.
50	50	**SP50SP**	A	0.42/0.21	2.60 [66.04]	3.35 [85.09]	2.60 [66.04]	2.13 [54.11]	2.17 [55.12]	0.22 x 0.44 [5.59 x 11.18]	2.98 [75.70]	2.60 [66.04]	1.6 [0.8]
100	100	**SP100SP**	A	0.83/0.42	2.99 [75.95]	3.54 [89.92]	2.85 [72.39]	2.52 [64.01]	2.40 [60.96]	0.22 x 0.44 [5.59 x 11.18]	3.23 [82.05]	2.85 [72.39]	3.0 [1.4]
150	150	**SP150SP**	A	1.25/0.63	2.99 [75.95]	4.29 [108.97]	2.85 [72.39]	2.52 [64.01]	3.15 [80.01]	0.22 x 0.44 [5.59 x 11.18]	3.23 [82.05]	2.85 [72.39]	4.3 [2.0]
250	160	**SP250SP**	A	2.08/1.04	3.78 [96.02]	4.09 [103.89]	3.40 [86.36]	3.31 [84.08]	2.99 [75.95]	0.22 x 0.44 [5.59 x 11.18]	3.78 [96.02]	3.40 [86.36]	6.5 [3.0]
350	250	**SP350SP**	A	2.92/1.46	3.78 [96.02]	4.69 [119.13]	3.40 [86.36]	3.31 [84.08]	3.58 [90.94]	0.22 x 0.44 [5.59 x 11.18]	3.78 [96.02]	3.40 [86.36]	8.3 [3.8]
500	300	**SP500SP**	A	4.17/2.08	4.49 [114.05]	4.69 [119.13]	3.78 [96.02]	3.78 [96.02]	3.66 [92.97]	0.31 x 0.81 [7.88 x 20.58]	4.16 [105.67]	3.78 [96.02]	11.0 [5.0]
750	500	**SP750SP**	A	6.25/3.13	5.25 [133.35]	4.69[1] [119.16]	4.37 [111.00]	4.50 [114.30]	3.66 [92.97]	0.31 x 0.81 [7.88 x 20.58]	4.75 [120.65]	4.75 [120.65]	16.0 [7.2]
1000	650	**SP1000SP**	A	8.33/4.17	5.25 [133.35]	5.47[1] [138.97]	4.37 [111.00]	4.50 [114.30]	4.45 [113.03]	0.31 x 0.81 [7.88 x 20.58]	4.75 [120.65]	4.75 [120.65]	20.0 [9.0]
1500	1000	**SP1500SP**	A	12.5/6.25	6.38 [162.06]	4.88[1] [123.98]	5.31 [134.88]	5.75 [146.05]	3.86 [98.05]	0.31 x 0.81 [7.88 x 20.58]	4.75 [120.65]	5.69 [144.53]	27.0 [12.2]

Primary and Secondary voltage links/jumpers supplied standard with all transformers.
Please contact your HPS representative for other requests.
[1] Note: For 750 through 1500 VA units actual overall depth is 0.24" plus the value in column B.
*** See page 10 for dimensional drawings.**

Dimensions in Inches [mm]
Weight in [kg]

GROUP J

Primary Voltage: **208 x 416** | 200 x 400 | 190 x 380
Secondary Voltage: **12 x 24** | 11.5 x 23 | 11 x 22

50/60 Hertz

VA Rating	CE VA Rating	Catalog Number	Mtg. Fig.	Output Amps	Overall Dimensions A	B	C	Mounting Centers D	E	Mounting Slot G X H	Height with Finger Guard	Height with Fuse Block Adapter	Approx. Ship Weight Lbs.
50	50	**SP50SR**	A	4.17/2.08	2.60 [66.04]	3.35 [85.09]	2.60 [66.04]	2.13 [54.11]	2.17 [55.12]	0.22 x 0.44 [5.59 x 11.18]	2.98 [75.70]	2.79 [70.87]	1.6 [0.8]
100	100	**SP100SR**	A	8.33/4.17	2.99 [75.95]	3.54 [89.92]	2.85 [72.39]	2.52 [64.01]	2.40 [60.96]	0.22 x 0.44 [5.59 x 11.18]	3.23 [82.05]	3.04 [77.22]	3.1 [1.4]
150	150	**SP150SR**	A	12.5/6.25	2.99 [75.95]	4.29 [108.97]	2.85 [72.39]	2.52 [64.01]	3.15 [80.01]	0.22 x 0.44 [5.59 x 11.18]	3.23 [82.05]	3.04 [77.22]	4.3 [2.0]
250	160	**SP250SR**	A	20.8/10.4	3.78 [96.02]	4.09 [103.89]	3.40 [86.36]	3.31 [84.08]	2.99 [75.95]	0.22 x 0.44 [5.59 x 11.18]	3.78 [96.02]	3.59 [91.19]	6.5 [3.0]
350	250	**SP350SR**	A	29.2/14.6	3.78 [96.02]	4.69 [119.13]	3.40 [86.36]	3.31 [84.08]	3.58 [90.94]	0.22 x 0.44 [5.59 x 11.18]	3.78 [96.02]	3.59 [91.19]	8.3 [3.8]
500	300	**SP500SR**	B	41.7/20.8	4.49 [114.05]	5.47 [138.94]	3.78 [96.02]	3.78 [96.02]	3.66 [92.97]	0.31 x 0.81 [7.88 x 20.58]	4.16 [105.67]	3.97 [100.84]	11.0 [5.0]

Primary and Secondary voltage links/jumpers supplied standard with all transformers.
Please contact your HPS representative for other requests.
*** See page 10 for dimensional drawings.**

Dimensions in Inches [mm]
Weight in [kg]

OPTIONAL ACCESSORIES

Finger Guards

HPS Spartan industrial control transformers up to and including 3000VA or 30 amps are available with optional finger guards.

Part Number	Applicable Transformer Part Number Suffix's	Applicable VA Sizes
SPFG1	AR, QR, PR, KHR, SR	50 to 350
SPFG1	KHP, SP, NJ	50 to 1500
SPFG1	ACP, MQMJ	50 to 3000

Note: Each finger guard supplies either the primary or secondary side. Finger guard option not available on SP5000ACP and SP5000MQMJ standard units. Add 0.38" per finger guard to overall depth (column B) on units from 50 VA to 500 VA and 0.31" to units from 750 VA to 2000 VA when finger guard has been installed.

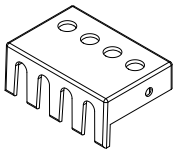

Finger Guard
(Optional)

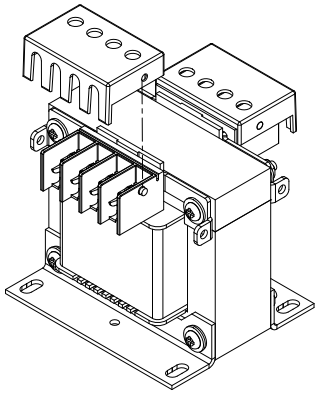

Sample Assembly Drawing for Optional Finger Guard Installation
(Only available for units supplied with either a primary or secondary molded terminal block)

Fuse Block Adapter Kit

HPS Spartan industrial control transformers up to and including 3000VA or 30 amps are available with optional fuse block adapter kits. The Fuse Block Adapter Kit is designed to allow for the installation of any third party after market fuse block assembly onto the industrial control transformer. The transformer must be a unit that incorporates a molded terminal block on either the primary or secondary side.

Note: HPS does not provide any jumpers or appropriate fuses for any after market fuse block you install on the HPS Spartan industrial control transformer. The HPS Fuse Block Adapter Kit provides only the mechanical means of attaching a third party after market fuse block. HPS does not recommend any specific fuse block or fuse supplier. For a recommended size of fuse please refer to the HPS Transformer Products catalog.

Kit Part Number	Applicable Transformer Part Number Suffixes	Applicable VA Sizes
SPFBAK1	AR, QR, PR, KHR, SR	50 to 500
SPFBAK1	KHP, SP, NJ	50 to 1500
SPFBAK1	ACP, MQMJ	50 to 3000

Note: Only 1 fuse block adapter kit is required per transformer. Fuse block adapter kit not available on SP5000ACP and SP5000MQMJ standard units. Add 0.38" per fuse block adapter to overall depth (column B) on units from 750 VA to 3000 VA when optional fuse block adapter is installed.

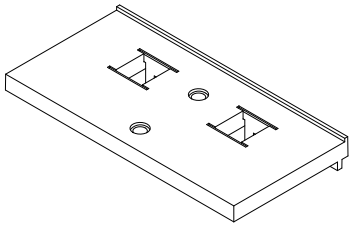

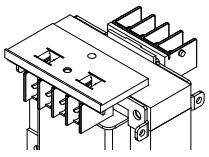

Fuse Block Adapter Kit
(Optional)

Sample Assembly Drawing for Optional Fuse Block Adapter Installation

For detailed installation instructions of HPS Spartan transformers or the optional finger guards and fuse block adapter kits, please visit our website.

HPS Spartan
Transformateur de contrôle type ouvert

DIMENSIONAL DRAWINGS

Some actual transformer units may differ from dimensional drawings shown below.

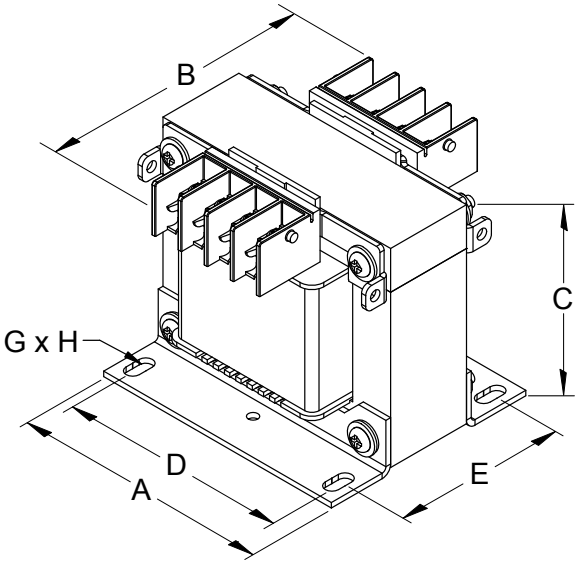

FIGURE A

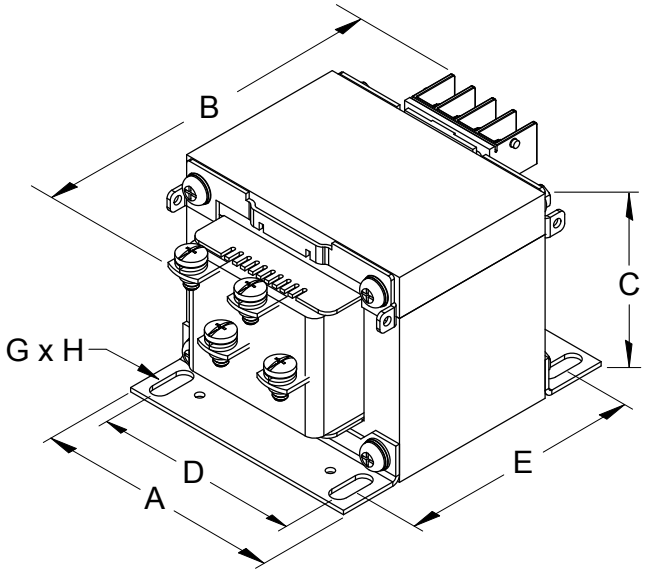

FIGURE B

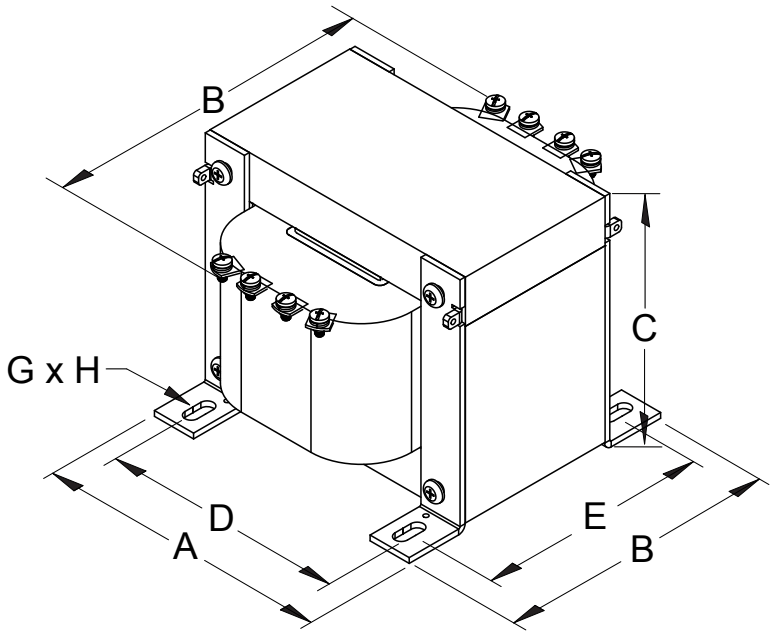

FIGURE C

Hammond Power Solutions

OTHER HPS CONTROL & AUTOMATION PRODUCTS

Control Transformers



HPS Imperator
Molded Machine Tool
Industrial Control Transformer



HPS Fusion
General Purpose Enclosed
Control Transformer



HPS Q-Series
Encapsulated Control
Transformers

Drive Isolation Transformers



HPS Tribune E
Drive Isolation Transformer -
Energy Efficient



HPS Tribune
Drive Isolation Transformer -
Low Efficiency

Reactors & Filters



HPS TruWave
Active Harmonic Filters



HPS Centurion P
Passive Harmonic Filters

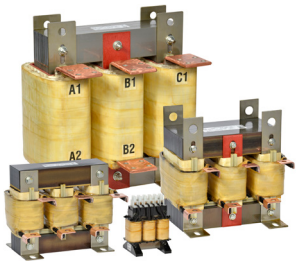

HPS Centurion R
Reactor

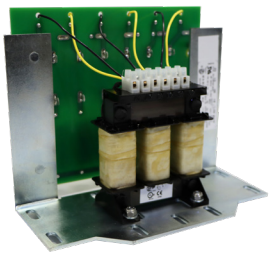

HPS RC Series
dV/dT Filters

Hammond Power Solutions


CANADA


UNITED STATES



MEXICO


ASIA

CANADA
Hammond Power Solutions
595 Southgate Drive
Guelph, Ontario N1G 3W6
Tel: (519) 822-2441
Fax: (519) 822-9701
Toll Free: 1-888-798-8882
sales@hammondpowersolutions.com

UNITED STATES
Hammond Power Solutions
1100 Lake Street
Baraboo, Wisconsin 53913-2866
Tel: (608) 356-3921
Fax: (608) 355-7623
Toll Free: 1-866-705-4684
sales@hammondpowersolutions.com

MEXICO
Hammond Power Solutions Latin America S.
Av. No. 800, Parque Industrial Guadalupe
Guadalupe, NL, Mexico, C.P. 67190.
Tel: (819) 690-8000
sales@hammondpowersolutions.com

ASIA
Hammond Power Solutions Pvt. Ltd.
Plot No 6A, Phase -1, IDA, Pashamylaram,
Patancheru (M) Sangareddy, 502 307, India
Tel: +91-994-995-0009
marketing-india@hammondpowersolutions.com

EMEA (Sales Office)
Hammond Power Solutions SpA
Tel: +49 (152) 08800468
sales-emea@hammondpowersolutions.com

SPACON
Feb 2023