Hammond Power Solutions

LR 3902

DRY TYPE TRANSFORMER 252L E50394

LISTED

GUELPH, ONT. BARABOO,WI COMPTON, CA MONTERREY, MX

THREE PHASE DRY TYPE AUTOTRANSFORMER
AUTOTRANSFORMATEUR SEC TRIPHASÉ

HV/HT	240V 216V
BIL	–
TERM. BORNES	H1 H2 H3 H4 H5 H6

VOLTS	CURRENT COURANT	% RATED VOLTAGE % TENSION NOMINALE	CONNECTION EACH PHASE CONNEXION PAR PHASE
240V 216V	72.2 80.2		H1–H2–H3 H4–H5–H6

LV/BT	208V
BIL	–
TERM. BORNES	X1 X2 X3

Cust. Ref. Réf. du client	
Serial No. No. de série	
Part No. No. de pièce	Y030CECF
kVA	30.0
TYPE	QT
Cooling Refroidissement	ANC
Temp. Rise Échauffement	115 ° C
Temp. Class Classe de Temp.	180 ° C
Frequency Fréquence	60 Hz
Impédance % @ 135 ° C	0.7
Encl. Type Type de boîtier	3R
Wt LBS Poids en lbs.	115
Winding Enroulement	COPPER

SPACINGS BETWEEN ANY ENCLOSURE PANEL AND ANY ADJACENT WALL SHALL BE A MINIMUM OF 1 INCHES

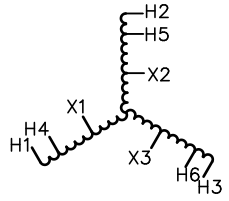

HAM3890

d0033036

8 03423 04612 5

				DES: WWONG	SHEET 1 OF 2
				DATE: 05/03/22	
NO.	DATE	BY	REVISION	SCALE: NTS	

Hammond Power Solutions Inc.

TITLE: 3 PH ENCAPSULATED AUTO TRANSFORMER NAMEPLATE INFORMATION

EDBY030CECF

0.3 mabdelaty 2017/05/03 10:30

FRONT VIEW

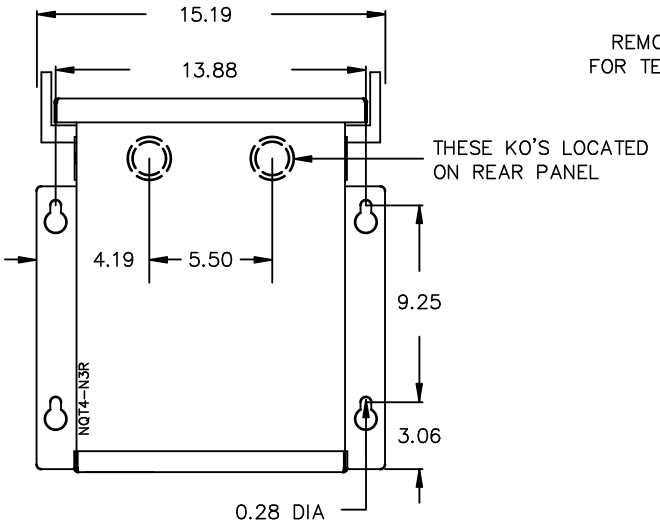

SIDE VIEW

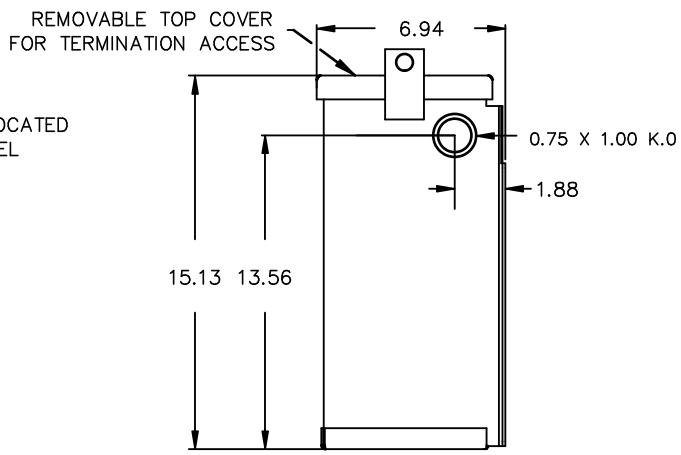

All Dimensions in inches

ENCLOSURE COLOR :ANSI 61 GREY – OUTDOOR

CUSTOMER NOTES:

Hammond Power Solutions Inc.

TITLE: 3 PH ENCAPSULATED AUTO TRANSFORMER

NO.	DATE	BY	REVISION

DES: WWONG
DATE: 05/03/22
SCALE: NTS

SHEET 2 OF 2

EDBY030CECF

0.3 mabdelaty 2017/05/03 10:30