34LYF012

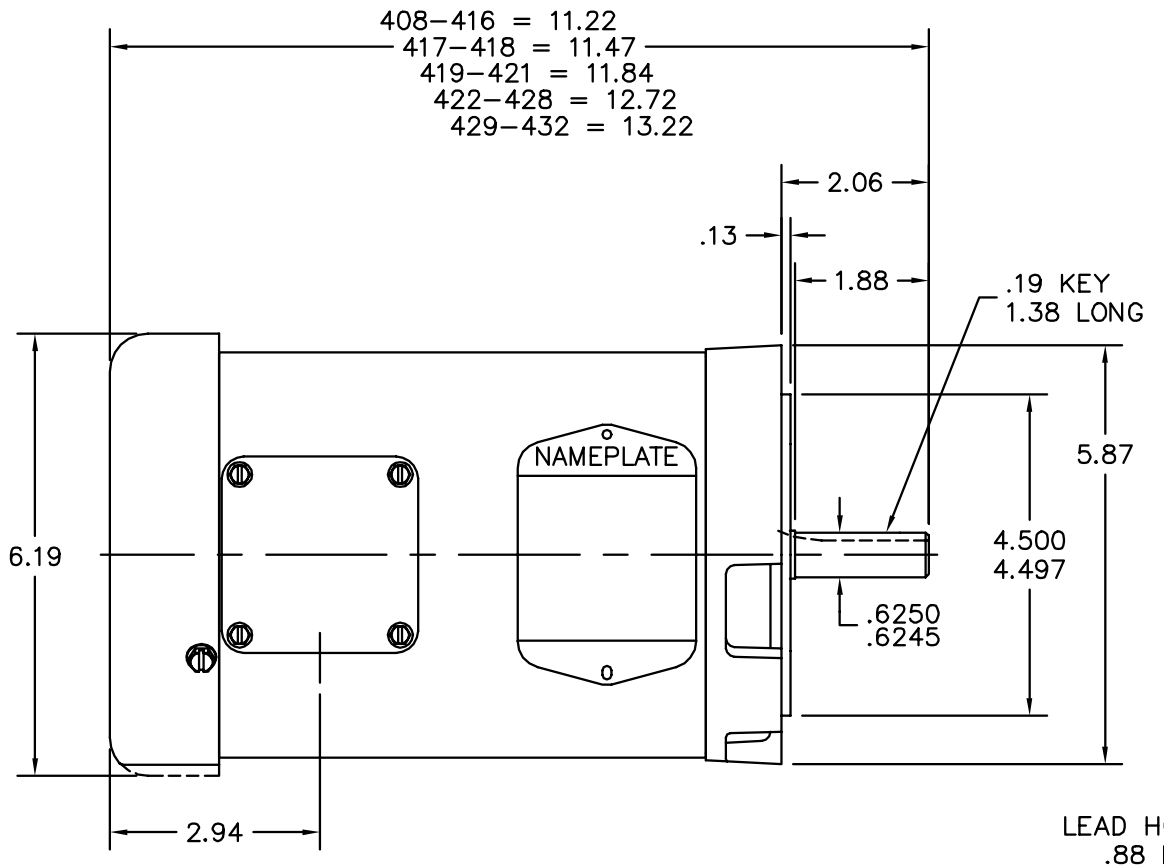

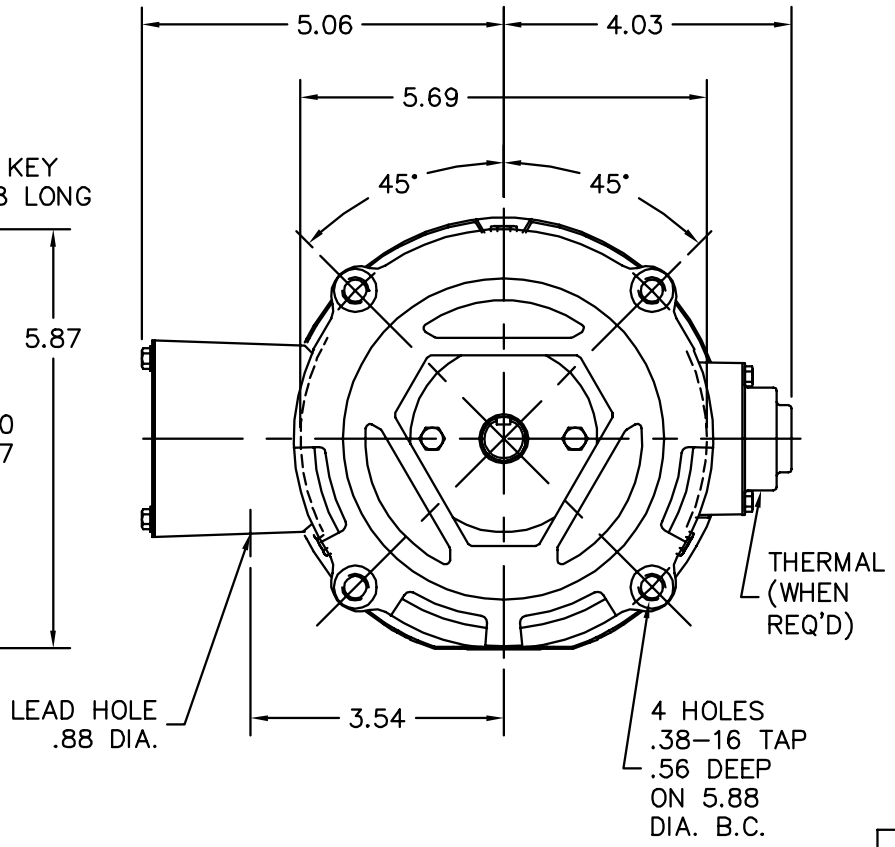

34LYF012

CUSTOMER IS RESPONSIBLE FOR DETERMINING THAT BALDOR'S PRODUCT WILL PERFORM SUITABLY IN THE INTENDED APPLICATION.

REV. DESC: ADD KOBX DIMENSION		
REV. LTR: H	VERSION: 03	TDR: 000000983990
FILE: \AAA\00020\667	REVISED: 01:19:34 06/13/2016	BY: ENMAIYO
MTL: –		

BALDOR

STD VERT MODEL 34M NEMA 56C OPEN W/DRIP COVER

SH 1 of 1