

TOP VIEW

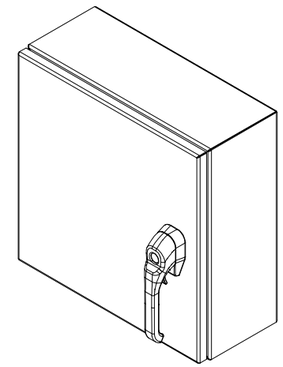

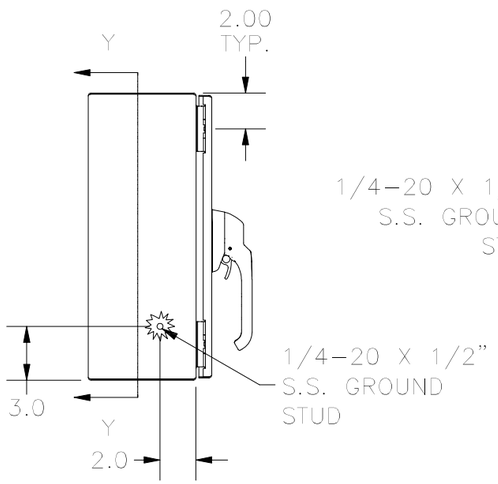

LEFT SIDE VIEW

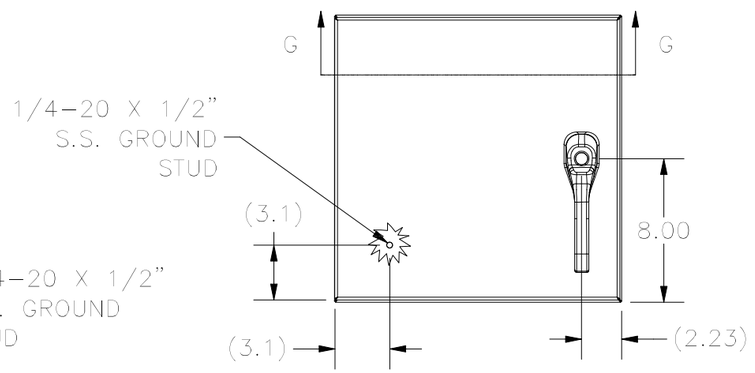

FRONT VIEW

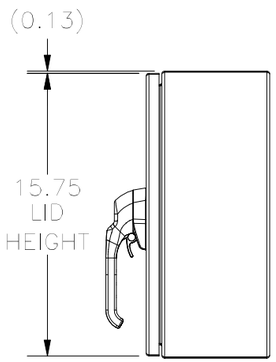

RIGHT SIDE VIEW

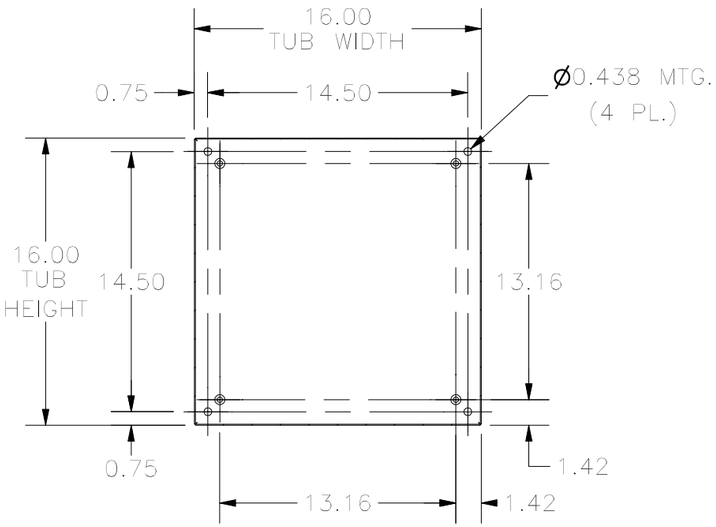

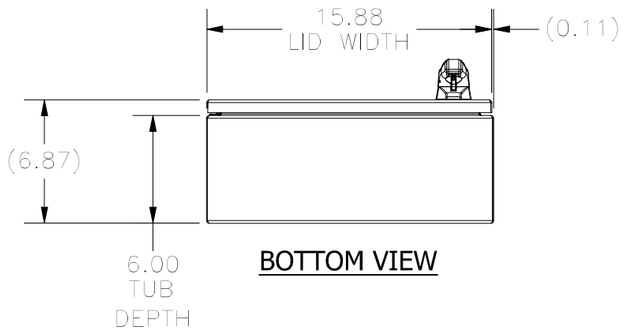

BOTTOM VIEW

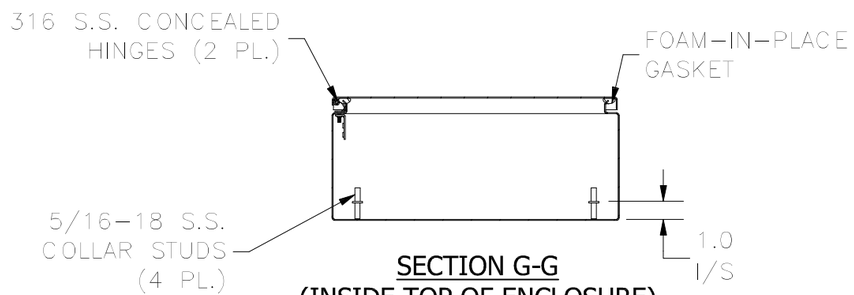

SECTION G-G
(INSIDE TOP OF ENCLOSURE)

SECTION Y-Y
(INSIDE BACK OF ENCLOSURE)

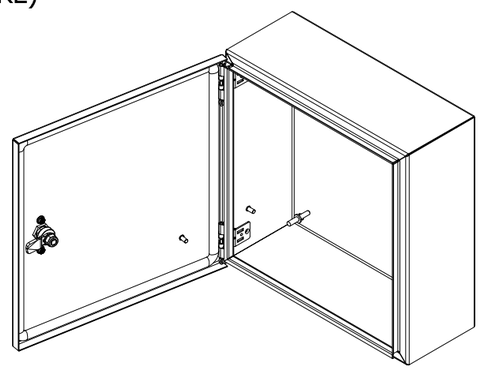

PART #: N412161606SS1PTC
(DATA SUBJECT TO CHANGE WITHOUT NOTICE.)

THIS DRAWING IS PROPERTY OF HUBBELL INC. WIEGMANN
ALL INFORMATION IS PROPRIETARY AND NOT TO BE DUPLICATED