

TOP VIEW

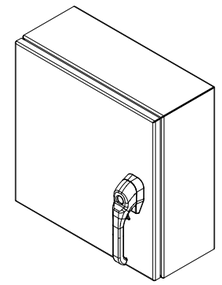

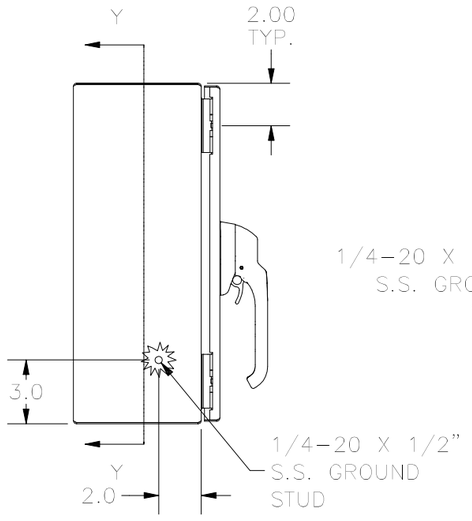

LEFT SIDE VIEW

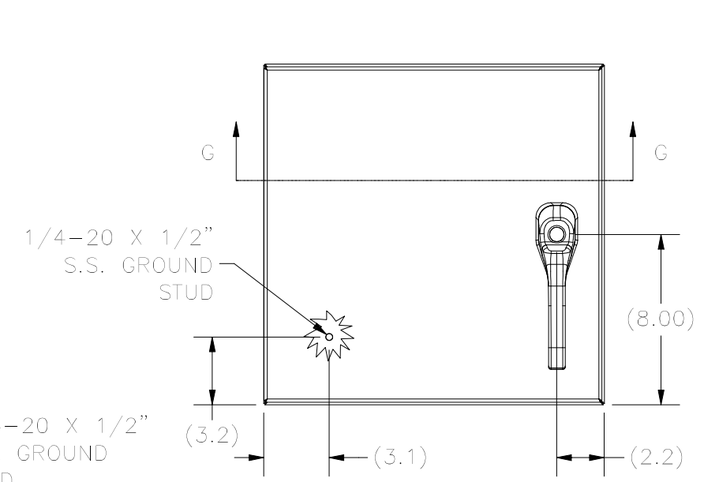

FRONT VIEW

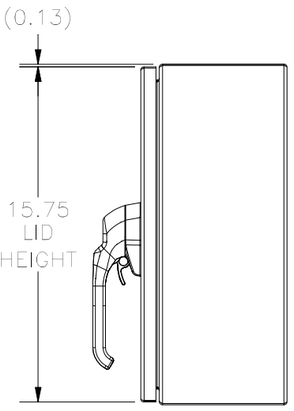

RIGHT SIDE VIEW

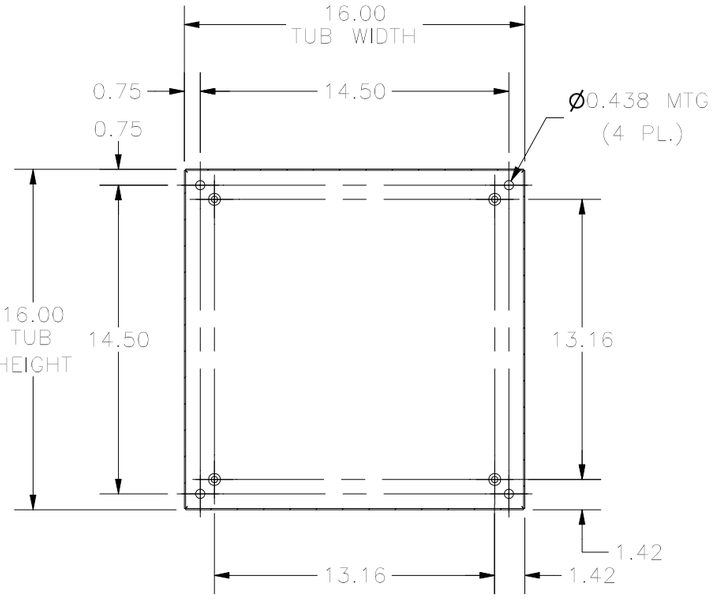

SECTION Y-Y
(INSIDE BACK OF ENCLOSURE)

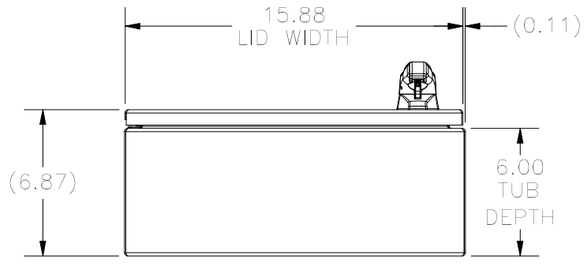

BOTTOM VIEW

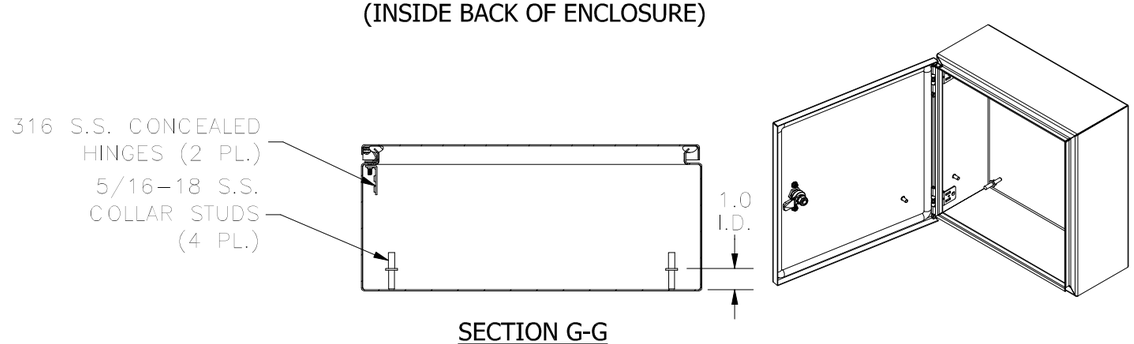

SECTION G-G
(INSIDE TOP OF ENCLOSURE)

PART #: N412161606SSA1PTC
(DATA SUBJECT TO CHANGE WITHOUT NOTICE.)

THIS DRAWING IS PROPERTY OF HUBBELL INC. WIEGMANN
ALL INFORMATION IS PROPRIETARY AND NOT TO BE DUPLICATED