

TOP VIEW (PLATE ONLY)

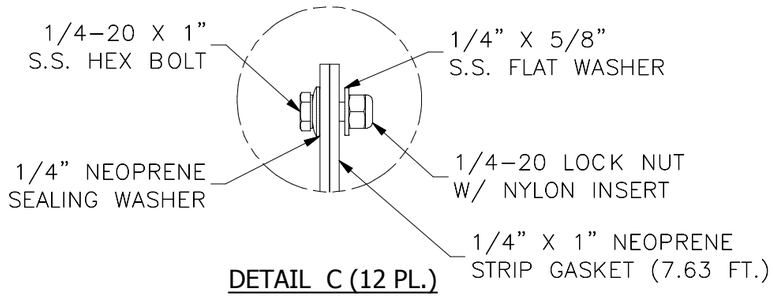

DETAIL C (12 PL.)

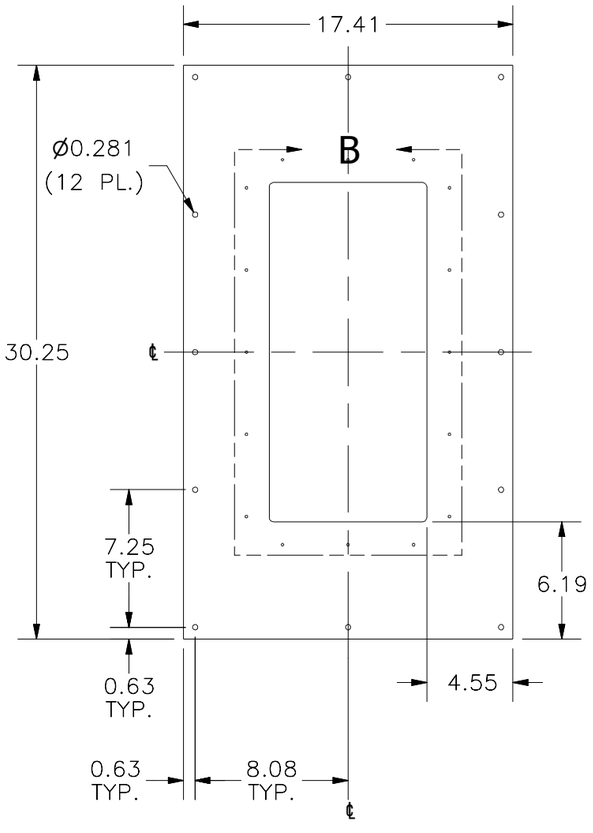

FRONT VIEW (PLATE ONLY)



ASSM. RIGHT SIDE VIEW

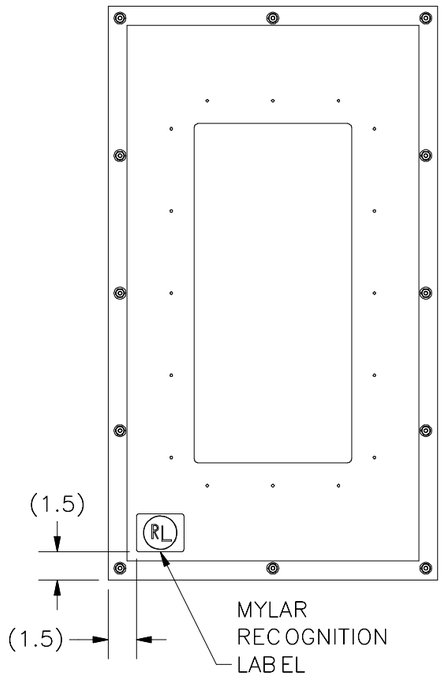

REAR VIEW

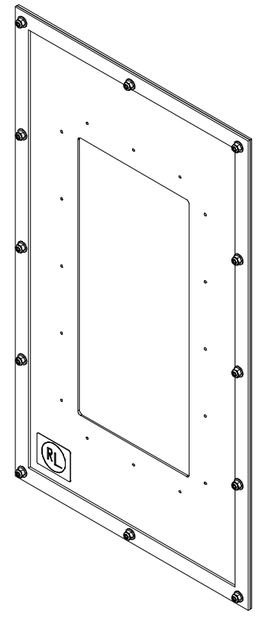

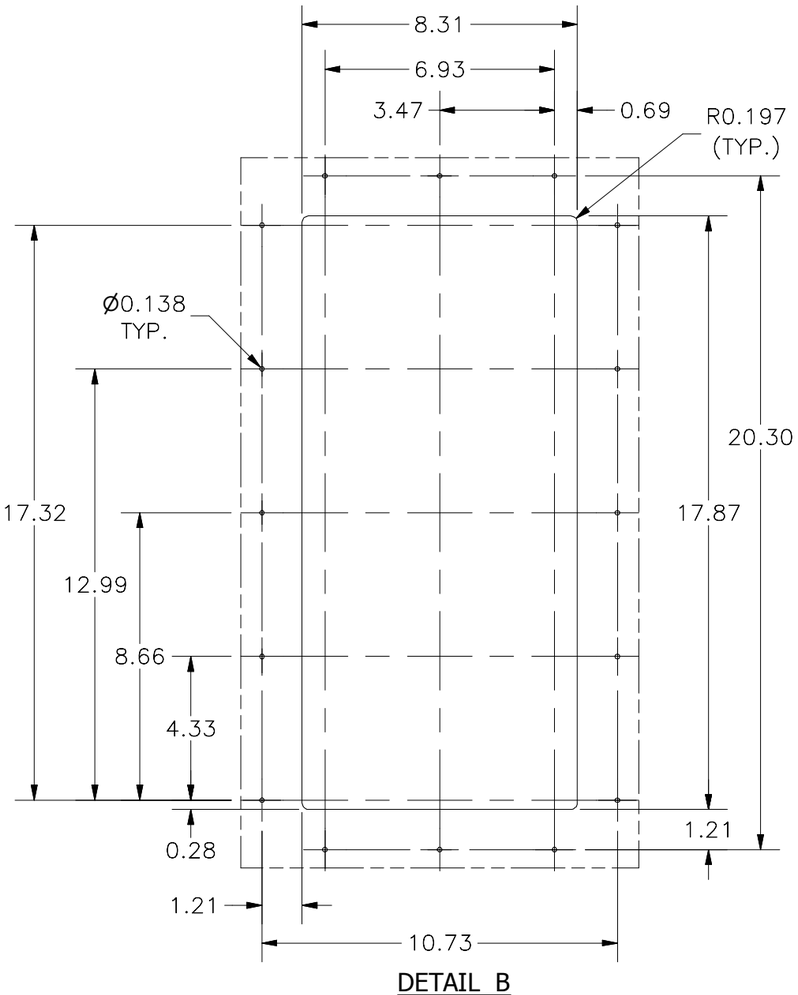

DETAIL B

PART#: DF48CVPF4
(DATA SUBJECT TO CHANGE WITHOUT NOTICE)

THIS DRAWING IS PROPERTY OF HUBBELL INC. WIEGMANN
ALL INFORMATION IS PROPRIETARY AND NOT TO BE DUPLICATED