

TOP VIEW

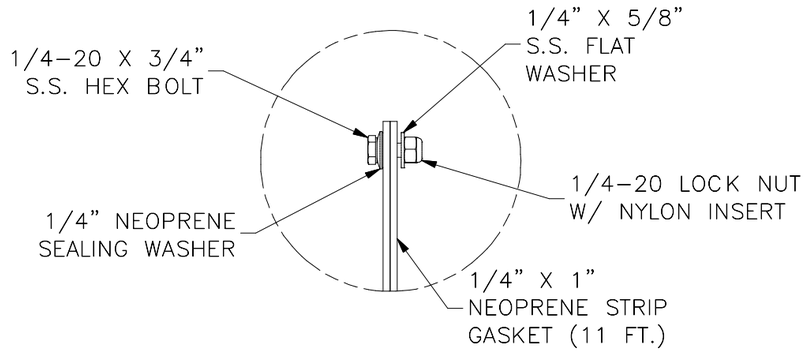

DETAIL C (18 PL.)

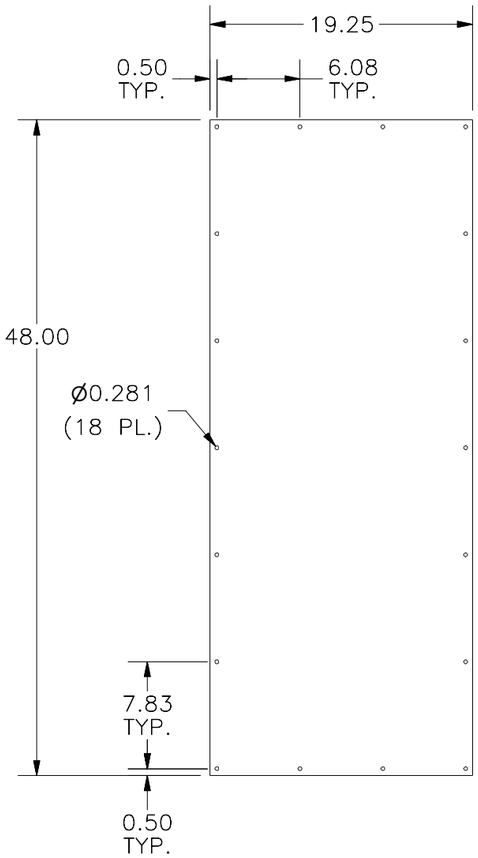

FRONT VIEW (PLATE ONLY)



RIGHT SIDE VIEW

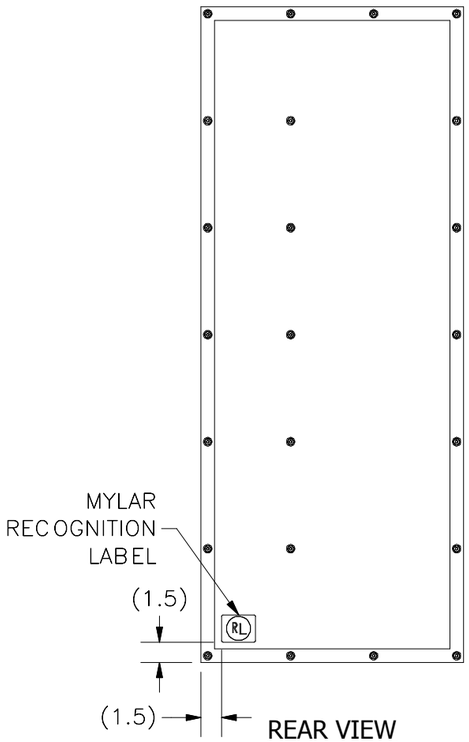

REAR VIEW

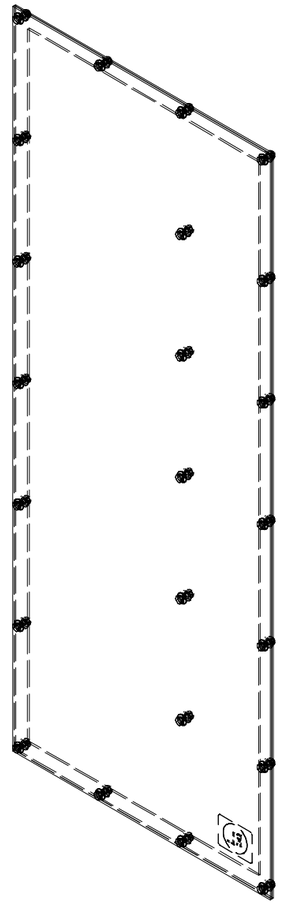

PART#: D48CVP
(DATA SUBJECT TO CHANGE WITHOUT NOTICE)

THIS DRAWING IS PROPERTY OF HUBBELL INC. WIEGMANN ALL INFORMATION IS PROPRIETARTY AND NOT TO BE DUPLICATED