

TOP VIEW

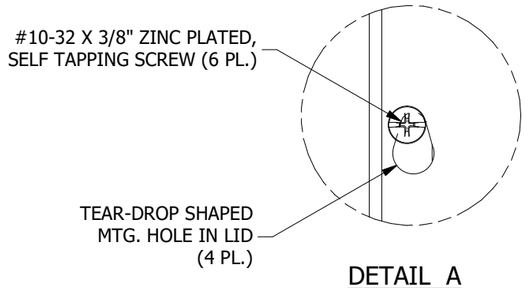

DETAIL A

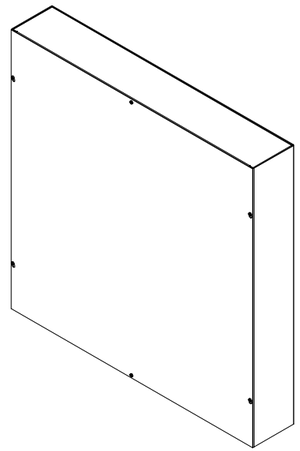

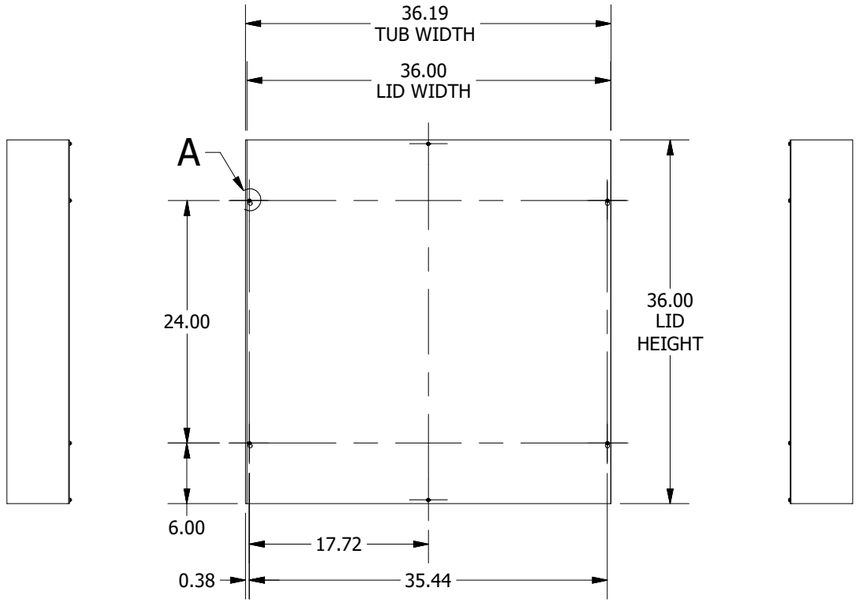

LEFT SIDE VIEW

FRONT VIEW

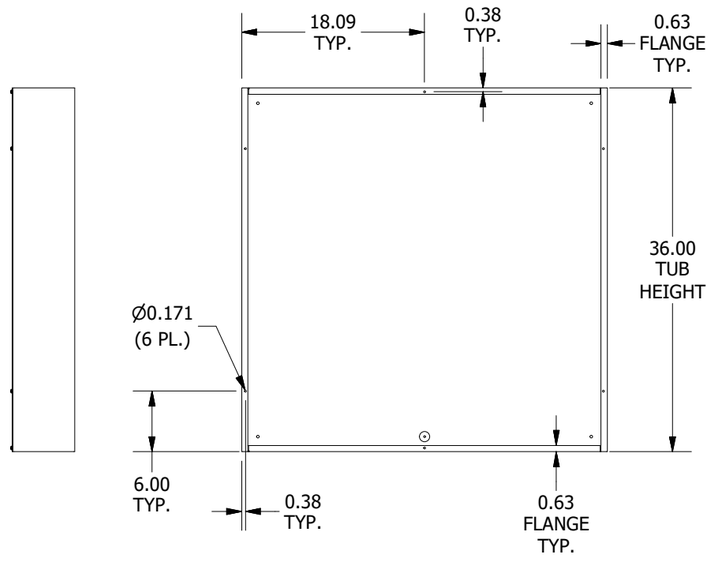

RIGHT SIDE VIEW

FRONT VIEW LID REMOVED

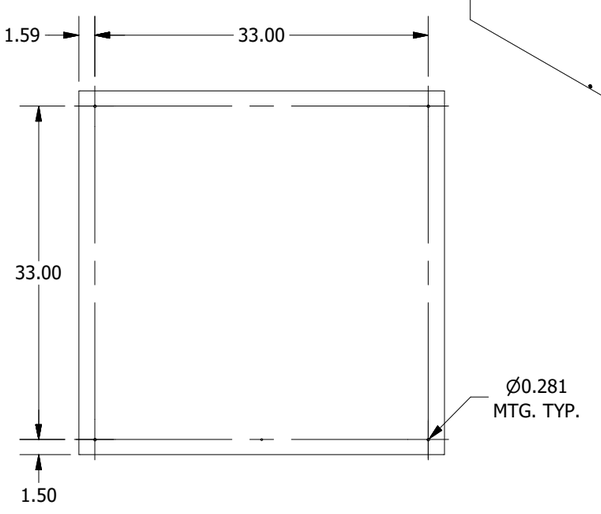

BACK VIEW



BOTTOM VIEW

PART#: SC363606NK
(DATA SUBJECT TO CHANGE WITHOUT NOTICE)

THIS DRAWING IS PROPERTY OF HUBBELL INC. WIEGMANN
ALL INFORMATION IS PROPRIETARY AND NOT TO BE DUPLICATED