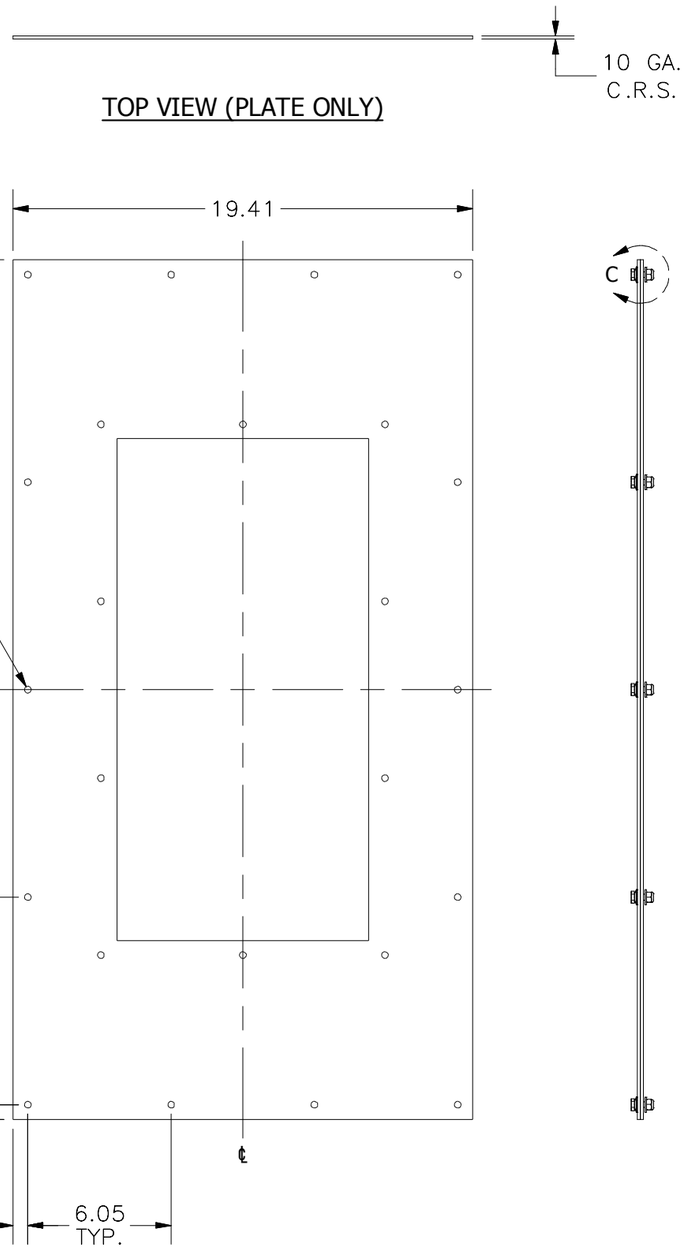

FRONT VIEW (PLATE ONLY)

ASSM. RIGHT SIDE VIEW

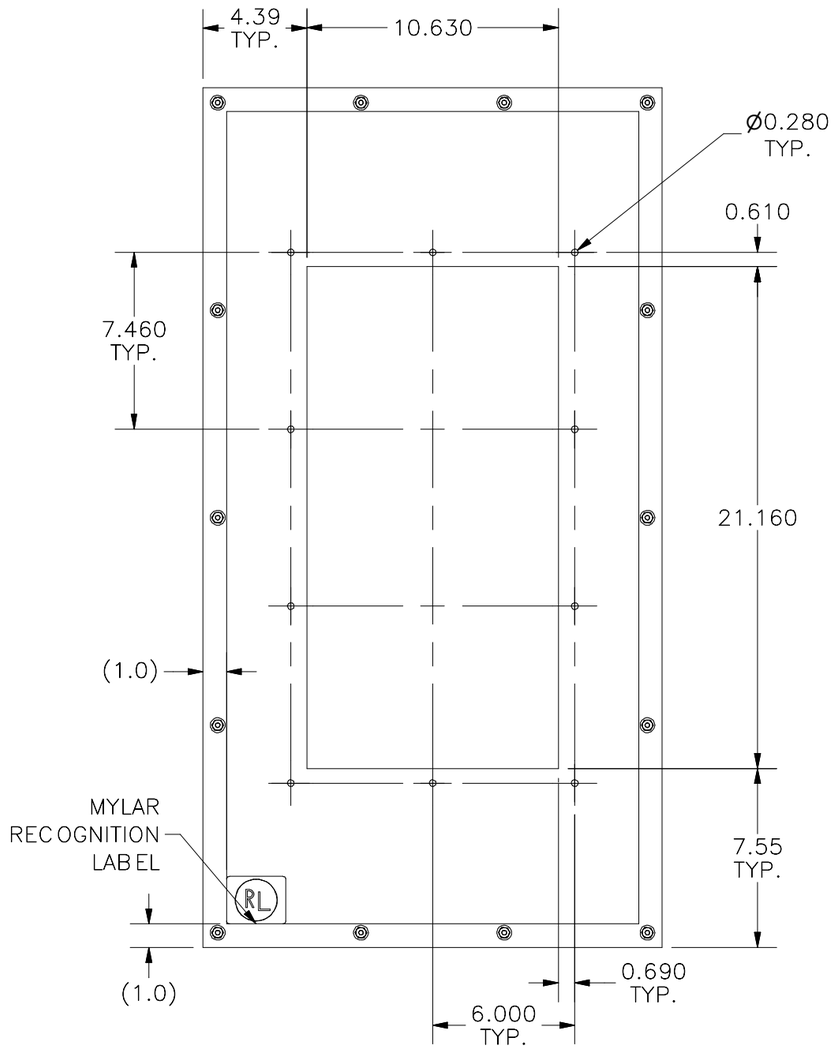

REAR VIEW

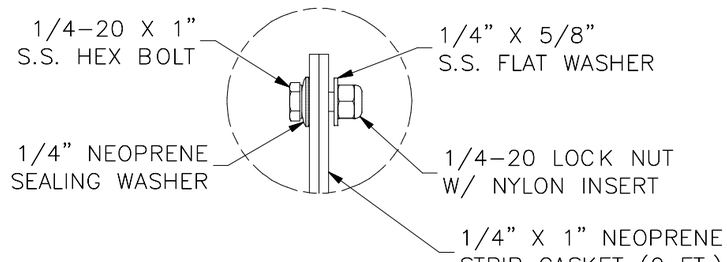

DETAIL C (14 PL.)

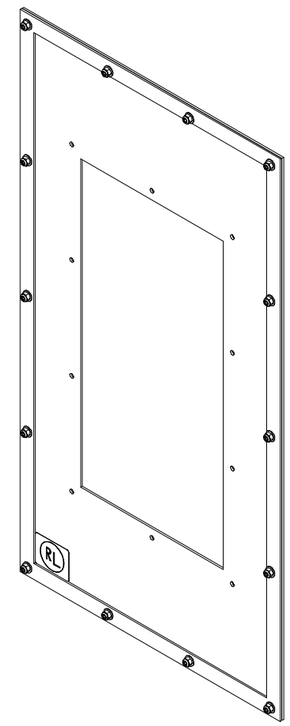

DRIVE SERIES	POWER Hp(kW)	VOLTAGE(V)
ALTIVAR 61/71	15 - 20 (11 - 15)	230
ALTIVAR 61/71	20 - 25 (15 - 18)	460

PART#: DSNF52CVPF5B

(DATA SUBJECT TO CHANGE WITHOUT NOTICE)

THIS DRAWING IS PROPERTY OF HUBBELL INC. WIEGMANN
ALL INFORMATION IS PROPRIETARY AND NOT TO BE DUPLICATED