

TOP VIEW (PLATE ONLY)

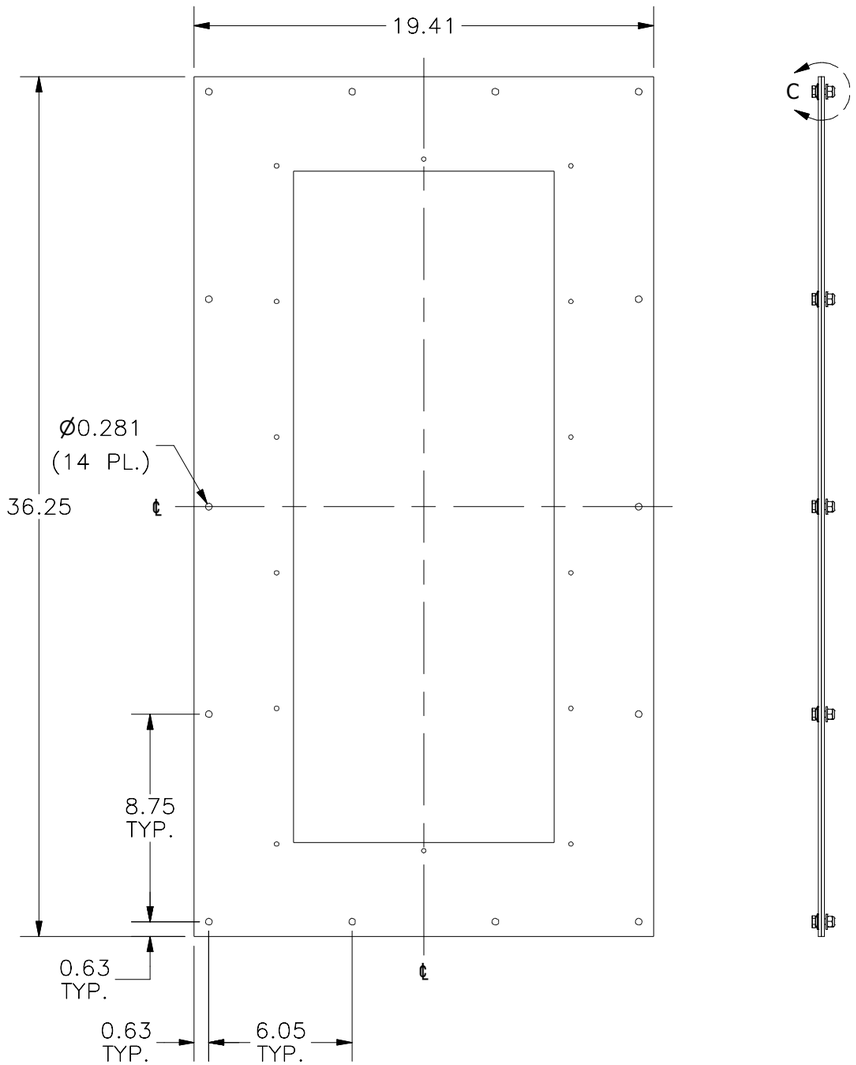

FRONT VIEW (PLATE ONLY)

ASSM. RIGHT SIDE VIEW

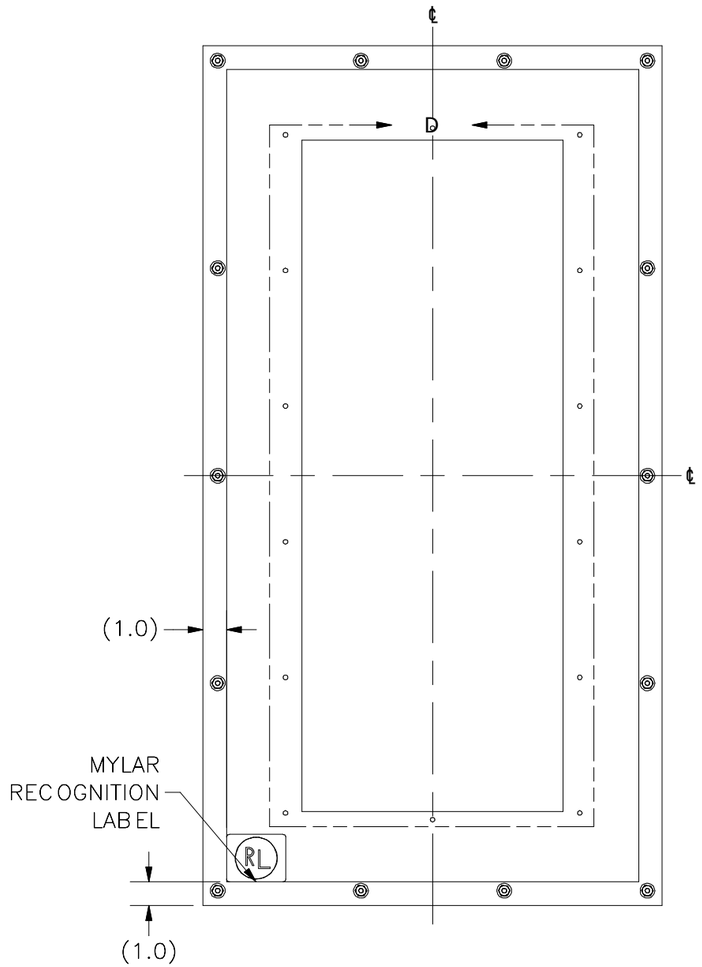

REAR VIEW

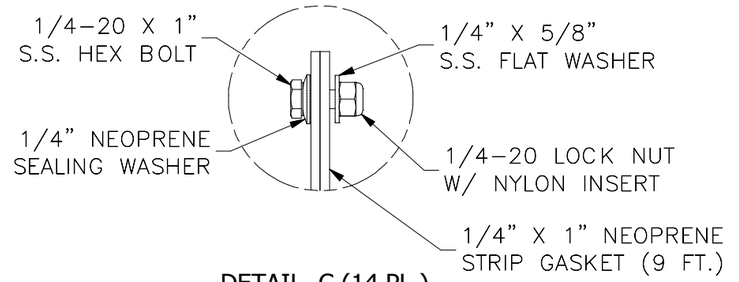

DETAIL C (14 PL.)

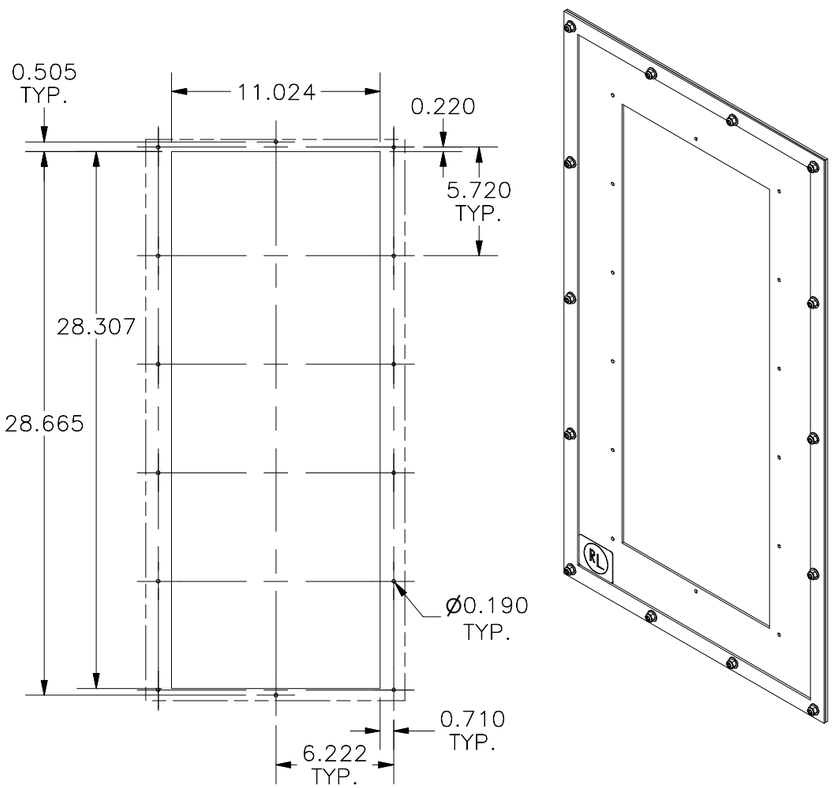

DETAIL D

DRIVE SERIES	POWER Hp(kW)	VOLTAGE(V)
ALTIVAR 61/71	40 - 50 (30 - 37)	460

PART#: DSNF52CVPF7A
(DATA SUBJECT TO CHANGE WITHOUT NOTICE)

THIS DRAWING IS PROPERTY OF HUBBELL INC. WIEGMANN
ALL INFORMATION IS PROPRIETARY AND NOT TO BE DUPLICATED