

TOP VIEW

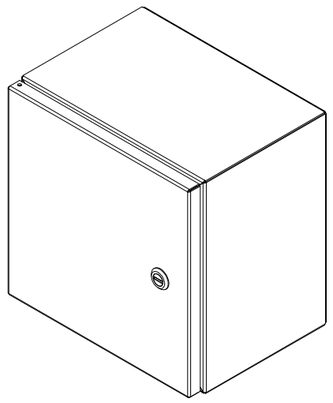

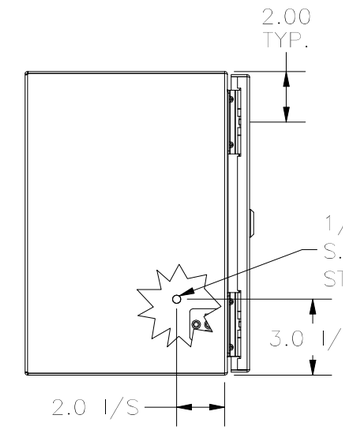

LEFT SIDE VIEW

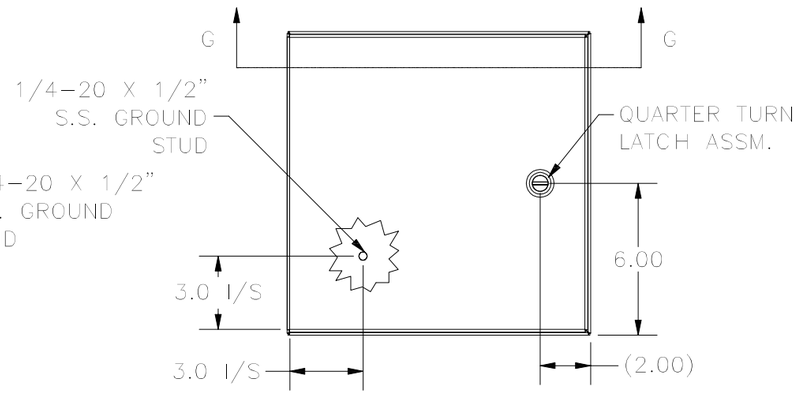

FRONT VIEW

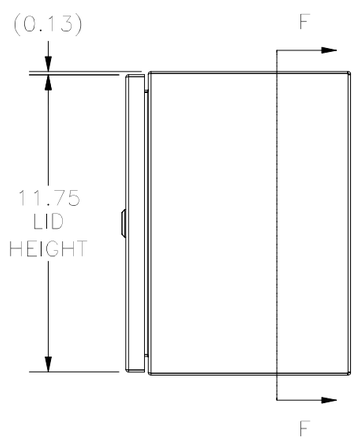

RIGHT SIDE VIEW

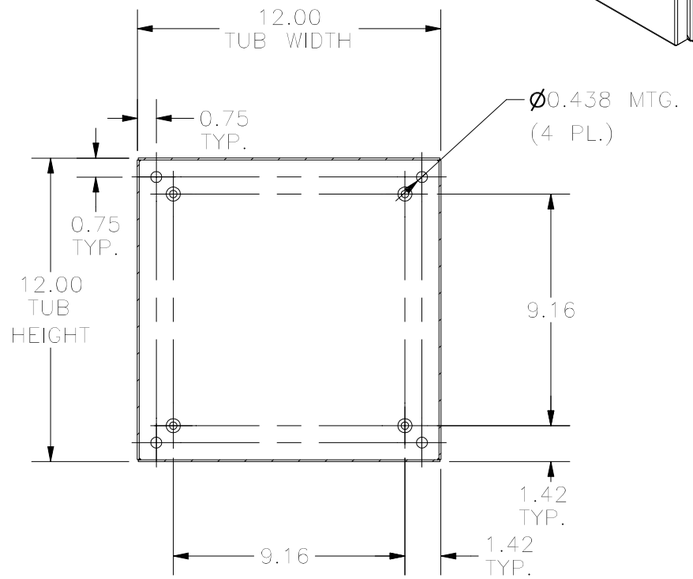

SECTION F-F
(INSIDE BACK OF ENCLOSURE)

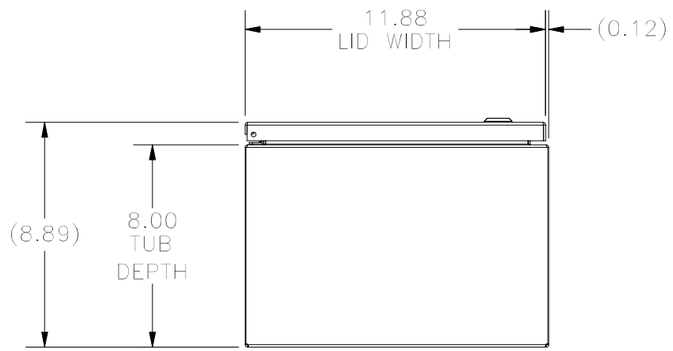

BOTTOM VIEW

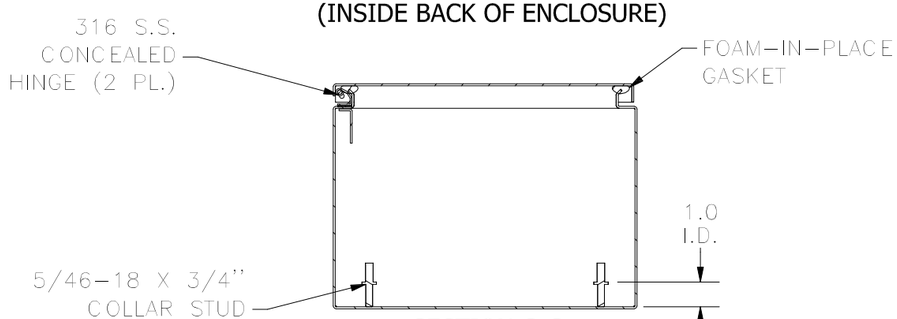

SECTION G-G
(INSIDE BACK OF ENCLOSURE)

PART#: N412121208C
(DATA SUBJECT TO CHANGE WITHOUT NOTICE)

THIS DRAWING IS PROPERTY OF HUBBELL INC. WIEGMANN
ALL INFORMATION IS PROPRIETARY AND NOT TO BE DUPLICATED