Browning®

Variable Pitch VL/VM/VP Type Sheaves Mounting and Adjusting Instructions

Power Transmission Solutions
Regal Beloit America, Inc.
7120 New Buffington Road
Florence, KY 41042
Application Engineering: 800 626 2093
www.RegalPTS.com

FORM 3865E Revised September 2015

⚠ WARNING

- Read and follow all instructions carefully.
- Disconnect and lock-out power before installation and maintenance. Working on or near energized equipment can result in severe injury or death.
- Do not operate equipment without guards in place. Exposed equipment can result in severe injury or death.

⚠ CAUTION

- Periodic inspections should be performed. Failure to perform proper maintenance can result in premature product failure and personal injury.

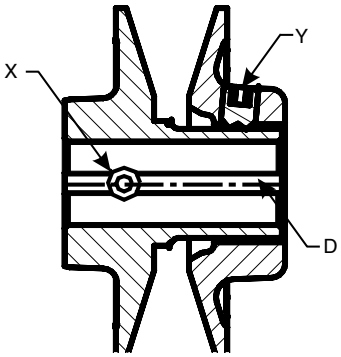

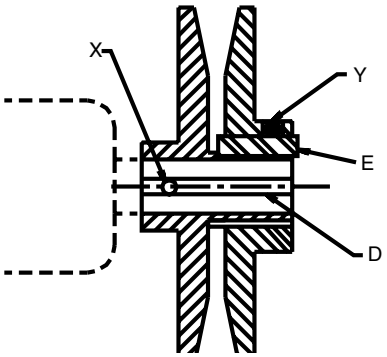

Key “E” projects to provide a grip for removing.

Do not operate sheave with flange projecting beyond the hub end.

Single Groove Sheaves with Barrel Flats
Mounting and Adjusting:

1. Make sure the shaft, sheave bore and keyway are free of burrs, paint, etc.
2. All sheaves should be mounted on the motor or driving shaft with the end containing the setscrew “X” toward the motor.
3. Fit shaft key “D” between sheave and shaft, and lock setscrew “X” in place. Wrench torque 110 in-lb min. - 130 in-lb max.
4. Be sure both driving and driven sheaves are in alignment and that shafts are parallel. Total axial and parallel misalignment must not exceed 1/4°.
5. Loosen setscrew “Y” in movable flange of sheave until movable flange is free to rotate.
6. Adjust sheave pitch diameter for desired speed by opening rotating parts by half or full turn increments from closed position. Do not open more than five full turns for “A” belts or six full turns for “B” belts (1VL34 or 1VP34, 5 turns). For other belt sections contact Application Engineering for maximum full turns open.
7. Tighten setscrew “Y” to 110 to 130 in-lb. with set screw “Y” located over center of cast flats on barrel of sheaves fixed component.
8. Put on belts and adjust belt tension. (Do not force belts over grooves.) A Browning® belt tension checker should be used to set tension.
9. Future adjustments should be made by loosening the belt tension and increasing or decreasing the pitch diameter of the sheave by half or full turns as required. Readjust belt tension before starting drive.
10. Be sure the key is in place and that all set screws are torqued properly before starting drive. Check setscrews and belt tension after 24 hours service.

Single Groove Sheaves with Barrel Keys
Mounting and Adjusting:

1. Make sure the shaft, sheave bore, keys and keyways are free of burrs, paint, etc.
2. All sheaves should be mounted on the motor or driving shaft with the end containing the setscrew “X” toward the motor. Be sure setscrew “X” is well over the shaft.
3. Fit shaft key “D” between sheave and shaft, and lock setscrew “X” in place. Wrench torque 110 in-lb min. - 130 in-lb max.
4. Be sure both driving and driven sheaves are in alignment and that shafts are parallel. Total axial and parallel misalignment must not exceed 1/4°.
5. Loosen set screw “Y” in movable flange of sheave and pull out external key “E”. (This key projects a small amount to provide a grip for removing.)
6. Adjust sheave pitch diameter for desired speed by opening rotating parts by half or full turn increments from closed position. Do not open more than five full turns for “A” belts or six full turns for “B” or “5V” belts (1VL34 or 1VP34, 5 turns). For other belt sections contact Application Engineering for maximum full turns open.
7. Replace key “E” and tighten setscrew “Y” to 110 to 130 in-lb.
8. Put on belts and adjust belt tension. (Do not force belts over grooves.) A Browning belt tension checker should be used to set tension.
9. Future adjustments should be made by loosening the belt tension and increasing or decreasing the pitch diameter of the sheave by half or full turns as required. Readjust belt tension before starting drive.
10. Be sure that all keys are in place and that all setscrews are torqued properly before starting drive. Check setscrews and belt tension after 24 hours service.

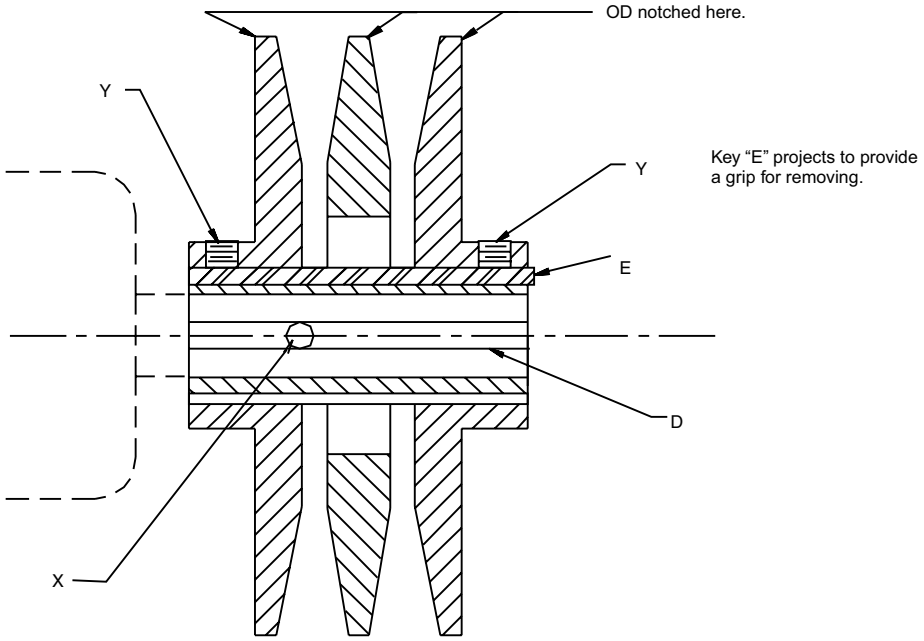

Two Groove Sheaves
Mounting and Adjusting:

1. Make sure the shaft, sheave bore, keys and keyways are free of burrs, paint, etc.
2. Remove key “E” from sheave. Unscrew flanges until setscrew “X” is visible. If setscrew “X” is at an angle, flange may have to be removed in order to tighten it.
3. All sheaves should be mounted on the motor or driving shaft with the end containing the setscrew “X” toward the motor. If setscrew “X” is at an angle, mount away from motor.
4. Fit shaft key “D” between sheave and shaft, and lock set screw “X” in place. Wrench torque 110 in-lb min. - 130 in-lb max. Replace outboard flange.
5. Be sure the center flange of both the driving and driven sheaves are in alignment and shafts are parallel.
6. Total axial and parallel misalignment must not exceed 1/4°.

Each flange of the sheave has a small notch on the O.D. of the flange. This mark is located directly over the keyway on the two adjustable flanges and over one of the keyways on the non-adjustable (center) flange. To obtain proper adjustments:

7. Loosen setscrews “Y” in moving flanges and pull out key “E”. (This key projects a small amount to provide a grip for removing.)
8. Rotate both movable flanges inward until they touch the center flange.
9. Locate the notch over the keyway on the center flange.
10. Open each movable flange until its notch is adjacent to the notch on the center flange. Be certain that neither movable flange is opened more than one full turn.
11. From the position obtained in Step 4, open each movable flange the same number of full or half turns until the desired number of turns is obtained. Do not open more than five full turns for “A” belts or six full turns for “B” belts. (2VP36 5 turns). For other belt sections contact Application Engineering for maximum full turns open.
12. Replace key “E” and tighten setscrews “Y”. Wrench torque 110 in-lb min. - 130 in-lb max.
13. Put on belts and adjust belt tension. (Do not force belts over flanges.) A Browning belt tension checker should be used to set tension.
14. Future adjustments should be made by loosening the belt tension and increasing or decreasing the pitch diameter of the sheave by half or full turns as required. Readjust belt tension before starting drive.
15. Two groove sheaves must have both halves adjusted by the same number of turns from the position established in Step 4 to ensure the same pitch diameter.
16. Be sure that all keys are in place and that all setscrews are torqued properly before starting drive. Check setscrews and belt tension after 24 hours service.

Browning is a trademark of Regal Beloit Corporation or one of its affiliated companies.
©2015 Regal Beloit Corporation, All Rights Reserved. MCIM15063E • Form 3865E • Printed in USA