Browning®

TorqTaper Plus V-Belt Guard Installation

Emerson Industrial Automation
Power Transmission Solutions
7120 New Buffington Road
Florence, KY 41042
Application Engineering: 800 626 2093
www.emerson-ept.com

F O R M
9186
December 2009

⚠ WARNING

- Read and follow all instructions carefully.
- Disconnect and lock-out power before installation and maintenance. Working on or near energized equipment can result in severe injury or death.
- Do not operate equipment without guards in place. Exposed equipment can result in severe injury or death.

⚠ CAUTION

- Periodic inspections should be performed. Failure to perform proper maintenance can result in premature product failure and personal injury.
- All electrical work should be performed by qualified personnel and compliant with local and national electrical codes.

1. **V-Belt Guard Installation**

Belt Guard Parts List

Item Number	Description
1	Belt Guard Bracket
2	Bracket Fasteners*
3	Belt Guard Back LH
4	Belt Guard Back RH
5	Slot Filler
6	Slot Filler Nuts (not visible)
7	Guard back Fasteners*
8	Guard Front
9	Hinge Pins
10	Lock Screw

* Hex head cap screws, washers and nuts supplied

NOTE: Motor mount and motor must be installed before starting v-belt guard installation.

Step 1

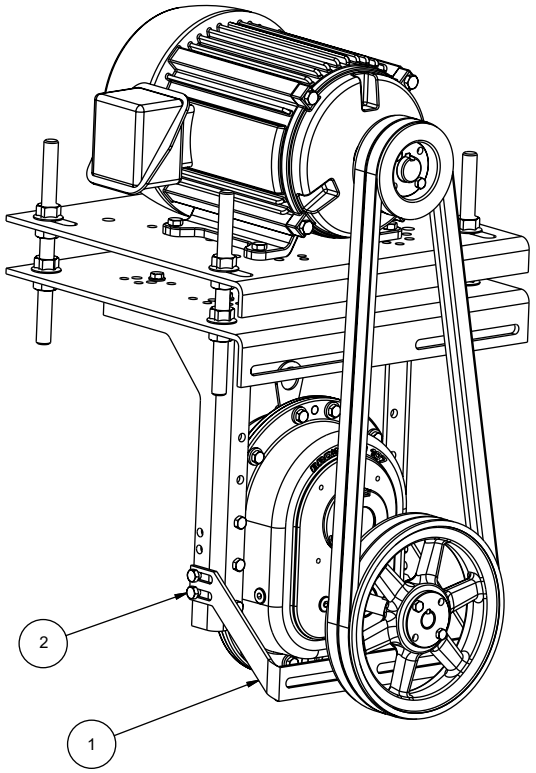

1.1 Bolt the belt guard lower mounting bracket (Item 1) to the motor mount supports using the cap screws, washers and nuts provided (Items 2). Tighten the cap screws finger tight.

1.2 SMTP 307 through 800. If a fan is to be utilized in this application, install the fan kit.

1.3 Mount the sheaves and belts. Align and adjust the tension per the belt manufacturer's instructions.

Step 2

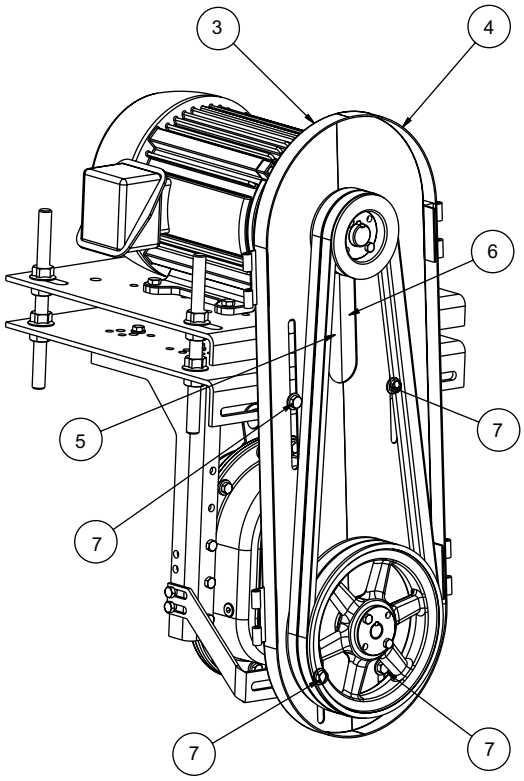

Emerson and Browning are trademarks of Emerson Electric Co. or one of its affiliated companies.
© 2009 Emerson Power Transmission. All rights reserved.
MCIM09008 • Form 9186 • Printed in USA

EMERSON™
Industrial Automation

1.4 Attach the left hand and right hand guard backs (Items 3 and 4) to the motor base adaptor and the lower mounting bracket as shown with the fasteners provided (Items 7). Tighten the bolts finger tight. If a fan is installed, adjust the position of the lower mounting bracket for 1/8 inch minimum clearance between the fan cover bolts and the guard backs.

1.5 Loosen the slot filler mounting nuts (Item 6) located on the guard backs until they are finger tight.

1.6 Position the guard backs and slot filler (Items 5) such that the motor shaft is centered in the cutouts provided and the reducer's input shaft is centered in the cutout provided.

1.7 Tighten the lower mounting bracket cap screws and the motor base adaptor cap screws to the recommended value (see Bolt Torque Specification Table). Tighten the slot filler nuts.

Step 3

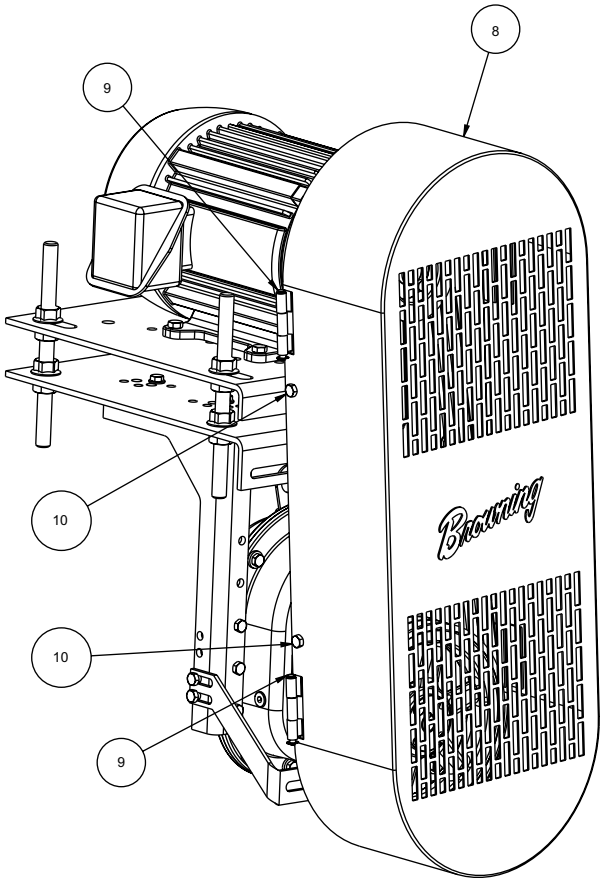

1.8 Using the hinge pins provided (Item 9), attach the guard front (Item 8) to the guard back.

1.9 Install guard front locks (Item 10).

Reducer Size	Bracket Hex Head Screws		Guard Back Hex Head Screws	
	Screw Size	Ft Lbs	Screw Size	Ft Lbs
107	5/16-18	16	3/8-16	29
115	5/16-18	16	3/8-16	29
203	5/16-18	16	3/8-16	29
207	3/8-16	29	3/8-16	29
215	3/8-16	29	3/8-16	29
307	3/8-16	29	3/8-16	29
315	3/8-16	29	3/8-16	29
407	3/8-16	29	1/2-13	70
415	3/8-16	29	1/2-13	70
507	1/2-13	70	1/2-13	70
608	1/2-13	70	1/2-13	70
800	1/2-13	70	1/2-13	70

Bolt Torque Specification Table

Emerson and Browning are trademarks of Emerson Electric Co. or one of its affiliated companies.
© 2009 Emerson Power Transmission. All rights reserved.
MCIM09008 • Form 9186 • Printed in USA

EMERSON™
Industrial Automation