TUBE AXIAL
MODEL PLDA



Made in the USA from domestic & foreign components

1 Year Warranty
DIRECT DRIVE PERFORMANCE / PRICING FEATURES

- Fan Easily Mounts In Round Duct
- Ball Bearing, Standard NEMA Frame Motors
- Spark Resistant Cast Aluminum Propellers

Note: For special custom order products - Once in production, non-cancellable, non returnable under any circumstance.

Totally Enclosed Single Speed
1 Phase 115/230V

EDP No.	Catalog No.	Prop Dia.	HP	Fan RPM	Capacity (CFM) @ "SP 0"	1/8"	1/4"	3/8"	1/2"	3/4"	Approx. Ship. Wt.	List Price
32002	PLDA12FZ	12"	1/2	3450	1875	1650	1400	1320	1250	1100	41	$2,344
32008	PLDA12HZ	12"	3/4	3450	2044	1960	1920	1820	1650	1500	50	$2,107
32014	PLDA18CA	18"	1/4	1725	3450	3050	2500	1200			60	$2,292
32020	PLDA18DA	18"	1/3	1725	3315	3000	2600	2000	1400		90	$2,509
32026	PLDA18JA	18"	1	1725	4600	4375	4080	3600	3000	2100	100	$2,961
32032	PLDA24CA	24"	1/4	1725	5200	4200	2820	1050			96	$2,514
32038	PLDA24DC	24"	1/3	1140	4975	4690	4250	3920	2850		100	$3,746
32044	PLDA24FA	24"	1/2	1725	6510	5880	5200	4150	3100	1800	114	$3,288
32051	PLDA24HC	24"	3/4	1140	6900	6450	6265	5600	3300		120	$4,454
32057	PLDA24JA	24"	1	1725	7425	7000	6350	5850	5000	3300	150	$3,658
32066	PLDA27FA	27"	1/2	1725	7550	6829	6000	5100	4000	2000	122	$3,060
32073	PLDA27JA	27"	1	1725	9600	9000	8400	7775	7050	4800	152	$3,926
32079	PLDA27MA	27"	2	1725	11500	11200	10700	10000	9300	8000	175	$4,623
32085	PLDA30FA	30"	1/2	1725	8980	7650	6300	5400	4350	2300	128	$3,784
32091	PLDA30HC	30"	3/4	1140	10440	9750	8750	7640	600		185	$4,798
32097	PLDA30MA	30"	2	1725	12000	11250	10450	9600	8700	6000	180	$4,793
32109	PLDA34KA	34"	1-1/2	1725	13350	12100	10000	9100	7300		190	$5,207
32115	PLDA34MA	34"	2	1725	14850	13600	12100	10450	8800	4000	200	$5,469

TUBE AXIAL
MODEL PLDA

Totally Enclosed Single Speed

3 Phase 230/460V

EDP No.	Catalog No.	Prop Dia.	HP	Fan RPM	Capacity (CFM) @ "SP 0"	1/8"	1/4"	3/8"	1/2"	3/4"	Approximate Ship. Wt.	List Price
32003	PLDA12FZ	12"	1/2	3450	1875	1650	1400	1320	1250	1100	41	$2,060
32009	PLDA12HZ	12"	3/4	3450	2044	1960	1920	1820	1650	1500	50	$2,481
32015	PLDA18CA	18"	1/4	1725	3450	3050	2500	1200			60	$2,278
32021	PLDA18DA	18"	1/3	1725	3315	3000	2600	2000	1400		90	$2,431
32027	PLDA18JA	18"	1	1725	4600	4375	4080	3600	3000	2100	100	$2,923
32033	PLDA24CA	24"	1/4	1725	5200	4200	2820	1050			96	$2,496
32039	PLDA24DC	24"	1/3	1140	4975	4690	4250	3920	2850		100	$3,648
32045	PLDA24FA	24"	1/2	1725	6510	5880	5200	4150	3100	1800	114	$3,250
32052	PLDA24HC	24"	3/4	1140	6900	6450	6265	5600	3300		120	$3,855
32058	PLDA24JA	24"	1	1725	7425	7000	6350	5850	5000	3300	150	$3,587
32062	PLDA24OA	24"	3	1725	10500	9800	9500	9100	8700	7800	190	$4,165
32067	PLDA27FA	27"	1/2	1725	7550	6829	6000	5100	4000	2000	122	$3,027
32074	PLDA27JA	27"	1	1725	9600	9000	8400	7775	7050	4800	152	$3,855
32080	PLDA27MA	27"	2	1725	11500	11200	10700	10000	9300	8000	175	$3,550
32086	PLDA30FA	30"	1/2	1725	8980	7650	6300	5400	4350	2300	128	$3,746
32092	PLDA30HC	30"	3/4	1140	10440	9750	8750	7640	600		185	$4,198
32098	PLDA30MA	30"	2	1725	12000	11250	10450	9600	8700	6000	180	$4,350
32102	PLDA30MC	30"	2	1140	14000	13750	12900	11850	10450	2500	180	$5,032
32105	PLDA30OA	30"	3	1725	16000	15350	14700	13850	12900	10200	200	$4,530
32110	PLDA34KA	34"	1-1/2	1725	13350	12100	10000	9100	7300		190	$4,185
32116	PLDA34MA	34"	2	1725	14850	13600	12100	10450	8800	4000	200	$5,027
32120	PLDA34MC	34"	2	1140	15950	15100	13800	12500	11400		200	$5,572
32123	PLDA34OC	34"	3	1140	19300	18290	17230	16000	14800	11614	250	$5,653
32126	PLDA42JD	42"	1	870	15800	15200	13480	12310	5800	900	260	$6,614
32128	PLDA42MC	42"	2	1140	17964	17277	15326	13990	12351	7600	252	$6,281
32131	PLDA42MD	42"	2	870	22040	21000	20500	18500	15000	6000	260	$7,764
32133	PLDA42PC	42"	5	1140	28970	27960	26840	25700	24200	19500	300	$7,661
32136	PLDA48OC	48"	3	1140	28600	26500	24400	22000	20000	15900	290	$7,583
32138	PLDA48OD	48"	3	870	28700	26500	24200	21600	18500	10000	290	$9,999
32140	PLDA48PD	48"	5	870	33000	31500	29750	27650	25300	18000	310	$10,199

Explosion Proof Single Speed

1 Phase 115/230V

EDP No.	Catalog No.	Prop Dia.	HP	Fan RPM	Capacity (CFM) @ "SP 0"	1/8"	1/4"	3/8"	1/2"	3/4"	Approximate Ship. Wt.	List Price
32004	PLDA12FZ	12"	1/2	3450	1875	1650	1400	1320	1250	1100	41	$3,179
32010	PLDA12HZ	12"	3/4	3450	2044	1960	1920	1820	1650	1500	50	$3,380
32016	PLDA18CA	18"	1/4	1725	3450	3050	2500	1200			60	$2,968
32022	PLDA18DA	18"	1/3	1725	3315	3000	2600	2000	1400		90	$3,407
32028	PLDA18JA	18"	1	1725	4600	4375	4080	3600	3000	2100	100	$3,953
32034	PLDA24CA	24"	1/4	1725	5200	4200	2820	1050			96	$3,185
32040	PLDA24DC	24"	1/3	1140	4975	4690	4250	3920	2850		100	$4,575
32046	PLDA24FA	24"	1/2	1725	6510	5880	5200	4150	3100	1800	114	$4,274
32053	PLDA24HC	24"	3/4	1140	6900	6450	6265	5600	3300		120	$5,616
32059	PLDA24JA	24"	1	1725	7425	7000	6350	5850	5000	3300	150	$4,553
32068	PLDA27FA	27"	1/2	1725	7550	6829	6000	5100	4000	2000	122	$3,898
32075	PLDA27JA	27"	1	1725	9600	9000	8400	7775	7050	4800	152	$4,826
32081	PLDA27MA	27"	2	1725	11500	11200	10700	10000	9300	8000	175	$8,238
32087	PLDA30FA	30"	1/2	1725	8980	7650	6300	5400	4350	2300	128	$4,771
32093	PLDA30HC	30"	3/4	1140	10440	9750	8750	7640	6000		185	$5,959
32111	PLDA34KA	34"	1 1/2	1725	13350	12100	10000	9100	7300		190	$7,862

TUBE AXIAL

Explosion Proof Single Speed

3 Phase 230/460V

EDP No.	Catalog No.	Prop Dia.	HP	Fan RPM	Capacity (CFM) @ "SP 0"	1/8"	1/4"	3/8"	1/2"	3/4"	Approximate Ship. Wt.	List Price
32005	PLDA12FZ	12"	1/2	3450	1875	1650	1400	1320	1250	1100	41	$2,857
32011	PLDA12HZ	12"	3/4	3450	2044	1960	1920	1820	1650	1500	50	$3,522
32017	PLDA18CA	18"	1/4	1725	3450	3050	2500	1200			60	$2,972
32023	PLDA18DA	18"	1/3	1725	3315	3000	2600	2000	1400		90	$3,296
32029	PLDA18JA	18"	1	1725	4600	4375	4080	3600	3000	2100	100	$4,029
32035	PLDA24CA	24"	1/4	1725	5200	4200	2820	1050			96	$3,194
32041	PLDA24DC	24"	1/3	1140	4975	4690	4250	3920	2850		100	$4,809
32047	PLDA24FA	24"	1/2	1725	6510	5880	5200	4150	3100	1800	114	$4,350
32054	PLDA24HC	24"	3/4	1140	6900	6450	6265	5600	3300		120	$5,338
32060	PLDA24JA	24"	1	1725	7425	7000	6350	5850	5000	3300	150	$4,613
32063	PLDA24OA	24"	3	1725	10500	9800	9500	9100	8700	7800	190	$5,654
32069	PLDA27FA	27"	1/2	1725	7550	6829	6000	5100	4000	2000	122	$4,672
32076	PLDA27JA	27"	1	1725	9600	9000	8400	7775	7050	4800	152	$4,885
32082	PLDA27MA	27"	2	1725	11500	11200	10700	10000	9300	8000	175	$5,264
32088	PLDA30FA	30"	1/2	1725	8980	7650	6300	5400	4350	2300	128	$4,847
32094	PLDA30HC	30"	3/4	1140	10440	9750	8750	7640	600		185	$5,682
32100	PLDA30MA	30"	2	1725	12000	11250	10450	9600	8700	6000	180	$5,407
32103	PLDA30MC	30"	2	1140	14000	13750	12900	11850	10450	2500	180	$6,005
32106	PLDA30OA	30"	3	1725	16000	15350	14700	13850	12900	10200	200	$6,019
32112	PLDA34KA	34"	1 1/2	1725	13350	12100	10000	9100	7300		190	$5,866
32118	PLDA34MA	34"	2	1725	14850	13600	12100	10450	8800	4000	200	$5,986
32121	PLDA34MC	34"	2	1140	15950	15100	13800	12500	11400		200	$6,467
32124	PLDA34OC	34"	3	1140	19300	18290	17230	16000	14800	11614	250	$8,697
32129	PLDA42MC	42"	2	1140	17964	17277	15326	13990	12351	7600	252	$7,064
32134	PLDA42PC	42"	5	1140	28970	27960	26840	25700	24200	19500	300	$8,292

PLDA DIMENSIONS

Prop Dia.	A	B	C	F*
12"	12	14	13	14
18"	18	20	19	14
24"	24	27	25-5/8	18
27"	27	30	28-5/8	18
30"	30	33	31-5/8	18
34"	34	37	35-5/8	18
42"	42	45	43-5/8	18
48"	48	51	49-5/8	18

*Approx. - Dim. varies with motor.

NOTE: Special custom order product. Once in production, non-cancellable, non-returnable under any circumstance.

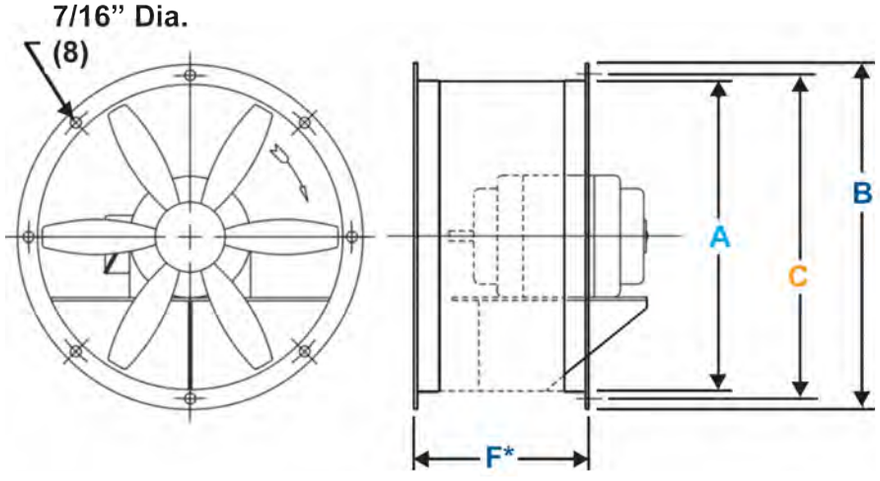

TUBE AXIAL
MODEL PLDA

PLDA Tube Axial Accessories

Matching Flange (1 ea.)

EDP No.	Catalog No.	Prop Dia.	List Price
32141	PLDA Accessory	12”	$111
32146	PLDA Accessory	18”	$142
32152	PLDA Accessory	24”	$167
32157	PLDA Accessory	27”	$204
32162	PLDA Accessory	30”	$204
32167	PLDA Accessory	34”	$251
32173	PLDA Accessory	42”	$287
32178	PLDA Accessory	48”	$301

Inspection Door

EDP No.	Catalog No.	Prop Dia.	List Price
32147	PLDA Accessory	18”	$616
32153	PLDA Accessory	24”	$635
32158	PLDA Accessory	27”	$759
32163	PLDA Accessory	30”	$768
32168	PLDA Accessory	34”	$787
32174	PLDA Accessory	42”	$824
32179	PLDA Accessory	48”	$852

Guard (each)

EDP No.	Catalog No.	Prop Dia.	List Price
32143	PLDA Accessory	12”	$176
32148	PLDA Accessory	18”	$180
32154	PLDA Accessory	24”	$194
32159	PLDA Accessory	27”	$251
32164	PLDA Accessory	30”	$273
32169	PLDA Accessory	34”	$311
32175	PLDA Accessory	42”	$366
32180	PLDA Accessory	48”	$500

Epoxy Coating

EDP No.	Catalog No.	Prop Dia.	List Price
32144	PLDA Accessory	12”	$1,061
32149	PLDA Accessory	18”	$1,116
32155	PLDA Accessory	24”	$1,422
32160	PLDA Accessory	27”	$1,736
32165	PLDA Accessory	30”	$1,792
32171	PLDA Accessory	34”	$2,111
32176	PLDA Accessory	42”	$2,496
32181	PLDA Accessory	48”	$2,959

Cont. Weld of Flange to Drum

EDP No.	Catalog No.	Prop Dia.	List Price
32145	PLDA Accessory	12”	$153
32151	PLDA Accessory	18”	$153
32156	PLDA Accessory	24”	$218
32161	PLDA Accessory	27”	$218
32166	PLDA Accessory	30”	$283
32172	PLDA Accessory	34”	$332
32177	PLDA Accessory	42”	$283
32182	PLDA Accessory	48”	$348