High Pressure Belt Drive Centrifugal Upblast Exhaust Fans

MODEL CBU-HP

Designed for High Static Pressure Installations

1 Year Warranty

FEATURES

- Non-Overloading Backward Inclined Aluminum Wheel
- Variable Pitch Motor Pulley for Field Adjustment
- AMCA Licensed for Sound and Air
- Emergency Disconnect Switch Standard
- Suitable for Wall Mount up through CBU-HP245MA
- ETL Listed for Over Cooking and Grease Laden Air

"Airmaster Fan certifies that Model CBU-HP shown herein is (or are) licensed to bear the AMCA Seal. The ratings shown are based on tests and procedures performed in accordance with AMCA Publication 211 and AMCA Publication 311 and comply with the requirements of the AMCA Certified Ratings Program."

Made in the USA from domestic & foreign components



Catalog No.	Wheel Dia.	HP	Fan RPM	Capacity (CFM) at "S.P. 1/2"	3/4"	1"	1 1/2"	2"	2 1/4"	2 1/2"	2 3/4"	Max Sones	Ship Wt.
CBU-HP150DA	15"	1/3	1200	1540	1310	900	-	-	-	-	-	12.3	130
CBU-HP150FA	15"	1/2	1400	1900	1750	1550	800	-	-	-	-	15.9	130
CBU-HP150HA	15"	3/4	1600	2250	2110	1990	1650	700	-	-	-	20.0	140
CBU-HP150JA	15"	1	1800	2590	2485	2360	2100	1750	1490	1000	-	23.0	140
CBU-HP180FA	18"	1/2	1000	2375	2060	1625	-	-	-	-	-	10.3	150
CBU-HP180HA	18"	3/4	1200	3050	2800	2590	1750	-	-	-	-	13.4	160
CBU-HP180JA	18"	1	1300	3450	3250	3100	2500	-	-	-	-	16.3	160
CBU-HP180KA	18"	1-1/2	1400	3800	3450	3300	2810	2130	-	-	-	22.0	180
CBU-HP200HA	20"	3/4	1000	3100	2750	2400	1100	-	-	-	-	13.1	165
CBU-HP200JA	20"	1	1100	3500	3200	2850	2250	-	-	-	-	16.2	165
CBU-HP200KA	20"	1-1/2	1200	3875	3700	3375	2800	1750	-	-	-	21.0	185
CBU-HP245JA	24"	1	800	4400	4000	3250	-	-	-	-	-	14.8	210
CBU-HP245KA	24"	1-1/2	1000	5750	5500	5200	4300	-	-	-	-	17.1	230
CBU-HP245OA	24"	3	1200	7200	6900	6700	6200	5350	5000	4400	4127	27.0	240
CBU-HP300HA	30"	3/4	500	4750	3600	-	-	-	-	-	-	10.0	350
CBU-HP300KA	30"	1-1/2	600	6250	5600	4750	-	-	-	-	-	15.6	370
CBU-HP300MA	30"	2	700	7700	7200	6600	5000	-	-	-	-	18.0	380
CBU-HP300OA	30"	3	800	9000	8550	8200	7200	5500	-	-	-	22.0	380
CBU-HP300PA	30"	5	900	10300	9950	9550	8800	7800	7300	6500	-	29.0	420

*Performance shown is for installation type A: Free inlet, Free outlet. Performance ratings do not include the effects of appurtenances in the airstream. Power rating (BHP) does not include transmission losses. The sound ratings shown are loudness values in fan sones at 5 ft (1.5 m) in a hemispherical free field calculated per AMCA Standard 301. Values shown are for Installation Type A: Free inlet hemispherical sone levels.

CBU WALL MOUNTING DETAILS

Model	A	C	Wall Opening
CBU-HP150	24-3/4	24-1/4	20
CBU-HP180	28	27-1/2	24
CBU-HP200	28	27-1/2	24
CBU-HP245	33	32-1/2	28

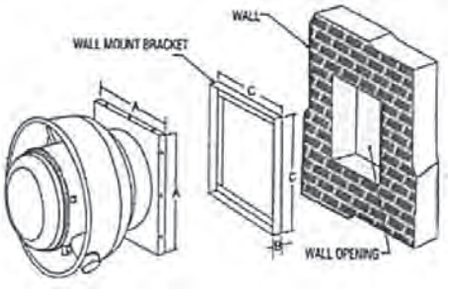

FAN DIMENSIONS

Wheel Dia.	Catalog Number	Ht.	W.	B	C	F	RO or WO
15"	CBU-HP 150	30.5"	33.75"	2"	24-3/4"	23"	20"
18"	CBU-HP 180	33.75"	39.38"	2"	28"	22.63"	24"
20"	CBU-HP 200	33.38"	38.68"	2"	28"	29.5"	24"
24"	CBU-HP 245	37.5"	43.38"	2"	33"	30.68"	28"
30"	CBU-HP 300	40"	52.75"	2"	40"	33.5"	36"

* Wall mount not available for 30" size

NOTES:

50Hz motors available.

Special custom order product. Once in production, noncancelable, non-returnable under any circumstance.

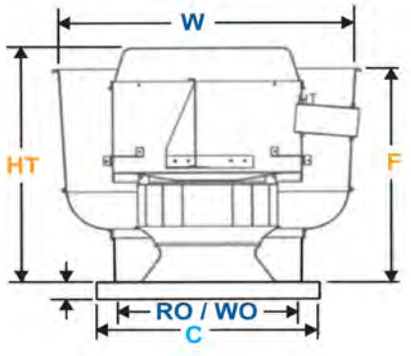

MODEL CBU-HP

Single Speed (ODP)

1 Ph 115/230V 1 Phase

EDP No.	Catalog No.	List Price
32582	CBU-HP150DA	$2,569
32583	CBU-HP150FA	$2,602
32585	CBU-HP150HA	$2,655
32587	CBU-HP150JA	$2,757
32589	CBU-HP180FA	$2,926
32593	CBU-HP180HA	$2,980
32595	CBU-HP180JA	$3,083
32597	CBU-HP180KA	$3,253
32599	CBU-HP180MA	$4,190
32601	CBU-HP200HA	$3,466
32603	CBU-HP200JA	$3,562
32605	CBU-HP200KA	$3,722
32607	CBU-HP200MA	$4,410
32613	CBU-HP245HA	$4,185
32615	CBU-HP245JA	$4,285
32617	CBU-HP245KA	$4,449
32619	CBU-HP245MA	$5,054
32621	CBU-HP245OA	$5,949
32624	CBU-HP300HA	$6,083
32628	CBU-HP300KA	$6,346
32632	CBU-HP300MA	$6,952
32634	CBU-HP300OA	$7,846

208/230/460V 3 Phase

EDP No.	Catalog No.	List Price
32584	CBU-HP150FA	$2,588
32586	CBU-HP150HA	$2,616
32588	CBU-HP150JA	$2,662
32592	CBU-HP180FA	$2,912
32594	CBU-HP180HA	$2,941
32596	CBU-HP180JA	$2,987
32598	CBU-HP180KA	$3,074
32600	CBU-HP180MA	$3,291
32602	CBU-HP200HA	$3,427
32604	CBU-HP200JA	$3,470
32606	CBU-HP200KA	$3,551
32608	CBU-HP200MA	$3,987
32614	CBU-HP245HA	$4,145
32616	CBU-HP245JA	$4,190
32618	CBU-HP245KA	$4,273
32620	CBU-HP245MA	$4,740
32622	CBU-HP245OA	$4,844
32623	CBU-HP245PA	$5,511
32625	CBU-HP300HA	$6,478
32629	CBU-HP300KA	$6,170
32633	CBU-HP300MA	$6,315
32635	CBU-HP300OA	$7,679
32636	CBU-HP300PA	$7,512

For specific accessory to use with certain CBD see Accessory Chart

Optional Accessories

8" Curb

EDP No.	Catalog No.	List Price
31107	PACA23.75-8	$259
31112	PACA27-8	$273
31115	PACA32-8	$309
31118	PACA39-8	$375

12" Curb

EDP No.	Catalog No.	List Price
31108	PACA23.75-12	$281
31113	PACA27-12	$295
31116	PACA32-12	$334
31119	PACA39-12	$406

18" High Ventilated Curb

EDP No.	Catalog No.	List Price
31109	PACA23.75-18V	$582
31114	PACA27-18V	$602
31117	PACA32-18V	$655
31120	PACA39-18V	$756

Damper - Gravity

EDP No.	Catalog No.	Ship Wt.	List Price
32455	BD29A	6	$166
32456	BD23.75A	7	$128
32518	BD37A	9	$157
32457	BD44A	16	$253

Damper - Motor Kit

EDP No.	Catalog No.	List Price
94283	Motor Kit	$259
94282	Motor Kit	$333

Accessories

EDP No.	Catalog No.	Description	ListPrice
62000	Curb Hinge	Curb Hinge	$177
62002	Bird Screen	Bird Screen	$200
62003	Grease Box	Grease Box	$200

Accessory Chart

CBU to Use	8" Curb	12" Curb	18" High Vent. Curb	Damper Gravity	Damper Motor Kit	Wall Mt. Damper
CBU-HP150DA	31107	31108	31109	32455	94283	32455
CBU-HP150FA	31107	31108	31109	32455	94283	32455
CBU-HP150HA	31107	31108	31109	32455	94282	32455
CBU-HP150JA	31107	31108	31109	32455	94282	32455
CBU-HP180FA	31112	31113	31114	32456	94282	32456
CBU-HP180HA	31112	31113	31114	32456	94282	32456
CBU-HP180JA	31112	31113	31114	32456	94282	32456
CBU-HP180KA	31112	31113	31114	32456	94282	32456
CBU-HP180MA	31112	31113	31114	32456	94282	32456
CBU-HP200HA	31112	31113	31114	32456	94282	32456
CBU-HP200JA	31112	31113	31114	32456	94282	32456
CBU-HP200KA	31112	31113	31114	32456	94282	32456
CBU-HP200MA	31112	31113	31114	32456	94282	32456
CBU-HP200OA	31112	31113	31114	32456	94282	32456
CBU-HP245HA	31115	31116	31117	32518	94282	32518
CBU-HP245JA	31115	31116	31117	32518	94282	32518
CBU-HP245KA	31115	31116	31117	32518	94282	32518
CBU-HP245MA	31115	31116	31117	32518	94282	32518
CBU-HP245OA	31115	31116	31117	32518	94282	
CBU-HP245PA	31115	31116	31117	32518	94282	
CBU-HP300HA	31118	31119	31120	32457	94282	
CBU-HP300KA	31118	31119	31120	32457	94282	
CBU-HP300MA	31118	31119	31120	32457	94282	
CBU-HP300OA	31118	31119	31120	32457	94282	
CBU-HP300PA	31118	31119	31120	32457	94282	

Wall Mount Damper

EDP No.	Catalog No.	List Price
32455	BD29A	$166
32456	BD23.75A	$128
32518	BD37A	$157

The sound ratings shown are loudness values in fan sones at 5 ft. (1.5m) in a hemispherical free field calculated per AMCA Standard 301. Values shown are for installation Type A: Free inlet fan sone levels. Sones are given for the highest value over catalog range. Backdraft Damper not for use in kitchen exhaust applications.

WALL MOUNT BRACKETS AVAILABLE (through CBU-HP245-MA) - CONTACT FACTORY

NOTE: Cannot use a Bird Screen and a Grease Box on the same fan.

NOTES: Non-Vented Curbs Available. Consult factory.

Pitched and Peaked Curbs available.

For Pitched Roof Curb price, multiply flat roof curb price by 1.67.

For Peaked Roof Curb price, multiply flat roof curb price by 2.22.

Please specify Pitched or Peaked when ordering.

Metal roofs, consult factory for sizing and pricing.

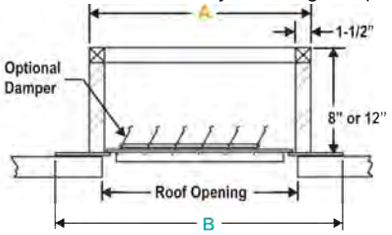

CURB DIMENSIONS

Curb Cat. No.	Ship Wt.	A Sq.	B Sq.	Roof Opening	Damper Cat. No.
PACA20	20	20"	24"	16"	BD16.75A
PACA23.75	23	23.75"	27.75"	20"	BD29A
PACA27	28	27"	31"	24"	BD23.75A
PACA32	39	32"	36"	28"	BD37A
PACA39	39	39"	43"	36"	BD44A
PACA43	45	43"	47"	40"	BD39.75A