Raider® Plus Installation Instructions

Emerson Industrial Automation
7120 New Buffington Road
Florence, KY 41042
Application Engineering: 800 626 2093
www.emerson-ept.com

FORM 9025 Revised March 2010

⚠ WARNING

- Disconnect and lock-out power before installation and maintenance. Working on or near energized equipment can result in severe injury or death.
- Do not operate equipment without guards in place. Exposed equipment can result in severe injury or death.
- Read and follow all instructions carefully.

⚠ CAUTION

- Periodic inspections should be performed. Failure to perform proper maintenance can result in premature product failure and personal injury.
- All electrical work should be performed by qualified personnel and compliant with local and national electrical codes.

NOTICE

- Ensure shaft keys are fully captive prior to use. Reduced torque capacity will result from a key not fully engaged.
- High inertia loads can back-drive the reducer during shut-down, resulting in product damage. Contact Application Engineering for recommendations.
- Avoid excessive force on input and output shafts during installation, as bearing damage can result.
- Contact Application Engineering for recommendations for units running at slow speeds or unusual conditions.
- Contact Application Engineering if the unit operates longer than 100 hours at a temperature of 230 degrees F. High temperatures can damage seals and bearings.
- EP oil is not recommended for worm gear reducers. These oils often contain elements which can react with the bronze worm gear.

Inspection

Inspect unit to make sure no damage has occurred during shipment.

Storage

Units should be stored in a clean, dry location. If units are to be stored for over six months, refer to Emerson Power Transmission.

Mounting

Mount units on a firm, flat surface which is sufficiently rigid to prevent vibration. Drive belts and chains should be within recommended limits of tightness. Couplings should be properly aligned and balanced. For drive recommendations refer to drive or equipment manufacturers or to Emerson Power Transmission.

FIGURE 1 MOUNTING POSITIONS

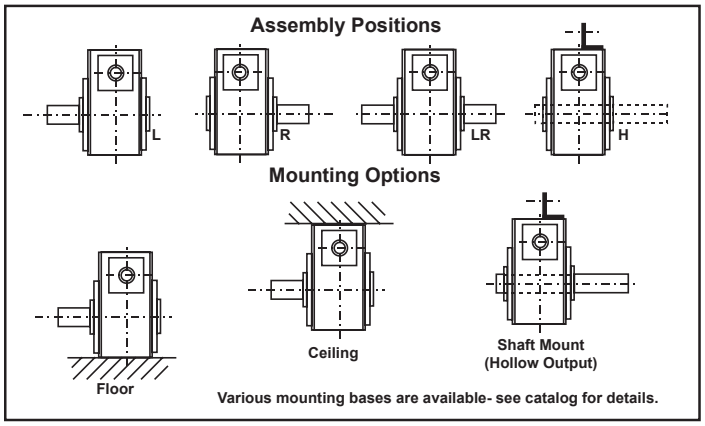

Lubrication

1. Units are factory filled for worm top installation with an ISO viscosity grade 460 polyglycol based (H1 food grade) lubricant. For other mounting positions, the oil level must be adjusted. (See Table 1)
   a. Flush the unit prior to refilling if changing oil type.
   b. Install the supplied breather/vent in the proper position per Figure 1 or 2

Lubricant Polyglycol

Ambient Temperature	5° F to 125° F
Viscosity Range (cSt at 40° C)	414 - 506
ISO Grade / AGMA Grade	460 / 140

2. The factory supplied lubricant does not require changing, however, the following periodic inspections are recommended:
   a. Check oil level and add if necessary
   b. Check breather/vent for proper operation
3. The normal operating sump temperature of a worm gear reducer maybe as high as 200° F for longer than 100 hours contact Application Engineering.

Units are shipped with polyglycol 460 oil, ready for worm-top installation. For other mounting positions, the oil level must be adjusted. See Table 1.

TABLE 1 OIL CAPACITY

Center Distance	Refer to Figure	Oil Capacity (ounces)							
		Shaft Out				Hollow Out			
		Worm Top (1)	Worm Bottom (2)	Worm vertical	Output vertical	Worm Top (1)	Worm Bottom (2)	Worm vertical	Output vertical
1.33	2	3.5	8.5	7.5	6.5	3.5	8	7.0	6.5
1.54	2	10	17	16.5	15	8	14.5	15.5	13.5
1.75	2	8.5	20.5	17	15	7	16.5	14.5	12.5
2.06	2	11	27	22	19.5	8	20.5	18.5	16
2.37	2	15.5	30	29	25	12	24.5	26.0	21.5
2.62	2	26	46	42.5	37.5	16.5	26	31.5	27
3.00	2	44.5	80.5	76.5	70	33.5	61.5	65.0	57
3.25	2	47	101	76	70.5	36	80	65.0	57.5
3.75	3	138	115	140	100	100	115	121.0	81.0
4.50	3	205	180	182	157	188	180	173.5	148.5
5.16	3	324	216	240	198	283	216	219.5	177.5
6.00	3	512	366	400	274	421	366	354.5	228.5

Note (1) Units are filled with polyglycol 460 oil with amount for this mounting position
Note (2) Not recommended

EMERSON
Industrial Automation

FIGURE 2 CENTER DISTANCE 1.33 - 3.25

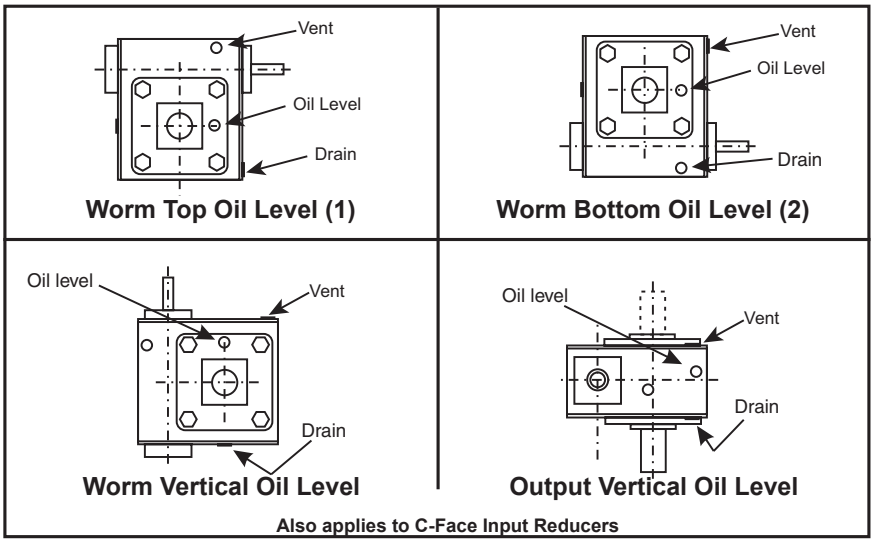

FIGURE 3 CENTER DISTANCE 3.75 - 6.00

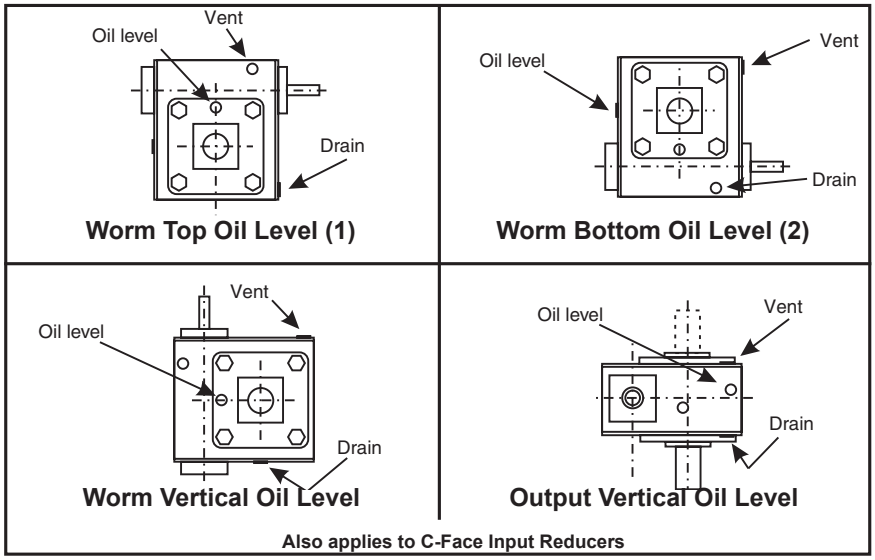

For Warranty Service Call
Emerson Industrial Automation
MAYSVILLE, KY 41056
Phone (800) 626-2093 Fax (606) 564-2079
Give complete Nameplate Data, including Identification Number

* The following trade names, trademarks and/or registered trademarks are used in this material by Emerson Power Transmission Corporation are NOT owned or controlled by Emerson Power Transmission Corporation and are believed to be owned by the following parties: Keystone and Nevastane: Total Lubricants USA, Inc.; Kluber and Klubersynth: Kluber Lubrication Munchen KG. Emerson Power Transmission Corporation cannot and does not represent or warrant the accuracy of this information.

Morse is a registered trademark of Borg-Warner Corporation, used herein under exclusive license. Emerson, Emerson Industrial Automation and Raider Plus are trademarks of Emerson Electric Co. or one of its affiliated companies.
©2005, 2008, 2010 Emerson Power Transmission, All Rights Reserved.
MCIM10012 • Form# 9025 • Printed in USA

EMERSON
Industrial Automation