BALDOR • RELIANCE

Product Information Packet

332B

.75HP,1800RPM,1PH,60HZ,3524C,BUFF

Copyright © All product information within this document is subject to ABB Motors and Mechanical Inc. copyright © protection, unless otherwise noted.

Part Detail

Revision:	AW	**Status:**	PRD/A	**Change #:**		**Proprietary:**	No
Type:	AC	**Elec. Spec:**	G8WG0060	**CD Diagram:**	CD0279	**Mfg Plant:**	
Mech. Spec:	G8-169	**Layout:**	G8LY0169	**Poles:**	04	**Created Date:**	
Base:	RG	**Eff. Date:**	06-14-2017	**Leads:**	4#18		

Specs

Nameplate Output:	.75		
Product Style:	BUFFER		

Nameplate NP3352L

CAT.NO.	332B		
HP	.75	**VOLTS**	115/230
PHASE	1	**AMPS**	4.6/2.3
HZ	60	**RPM**	1800
SER.NO			
SPEC.	G8-169-60		
BLANK			

Parts List

Part Number	Description	Quantity
SA037657	SA G8-169-60	1.000 EA
RA033682	RA G8-169-60	1.000 EA
OC3012F12SP	CYL OIL CAP 12MFD/370V	1.000 EA
G8BA3000	G8 & G10 BASE	1.000 EA
19XX2510A14	1/4-10 X 7/8 HEX HD PLASTITE SCREW	4.000 EA
HW1000A25	1/4 SAE FLAT WASHER (FS)	4.000 EA
HW1003A50	LOCKWASHER,1/2",EXT.TOOTHZINC PLATED	1.000 EA
51XN1032A04	10-32 X 0.25 HX WS SL SR	2.000 EA
XY1032A02	10-32 HEX NUT DIRECTIONAL SERRATION	2.000 EA
11XW1032G06	10-32 X .38, TAPTITE II, HEX WSHR SLTD U	1.000 EA
HW3001B01	BRASS CUP WASHER, FOR #10 SCREW	1.000 EA
LD5000A04	LEAD ASSY, ML1400DF14 W/(2) #10 RING 9"	1.000 EA
LD5000A05	LEAD ASSY, JUMPER FOR CAP	1.000 EA
HW3020E04	1/8 X 3/8 A GROOVE PIN (DRIV-LOCK #118	2.000 EA
G8CB4500A02	G8-272 BASE COVER,STPD X PLATED	1.000 EA
51XW0832A07	8-32 X .44, TAPTITE II, HEX WSHR SLTD SE	2.000 EA
RM1005A01SP	BUMPER- #2089 (R-R CO)	4.000 EA
15XF1032A10	10-32X5/8 PIN HD PHL TY FSEE JT	4.000 EA
LD5001A02	CORD & PLUG ASSY 18-3 SJT .33 DIA. 10 AM	1.000 EA
WD4102A01	SR-6L-1 HEYCO STRN RELIEF OR 23MPO6L10 M	1.000 EA
G8EP3900A01SP	ENDPLATE, MACH	2.000 EA
HW5100A06	W2420-025 WVY WSHR (WB)	2.000 EA
HA1000A34	DR2463A .02 BRG GUARD B N	2.000 EA
HA1025A03	FELT WSH 2.1875 OD X 1.170 ID X .25 #321	2.000 EA

Parts List (continued)

Part Number	Description	Quantity
19XW2520A12	SCREW,1/4-20X3/4 TAPTITE-II OR ROLOC 91	8.000 EA
HA3100A14	THRUBOLT 10-32 X 7.875	4.000 EA
XY1032A02	10-32 HEX NUT DIRECTIONAL SERRATION	4.000 EA
HA6098	WHEEL FLANGE, CAST	4.000 EA
XY7510A12SP	3/4-10 NUT R.H. HEX (NC) ZINC PLATED	1.000 EA
XY7510A62SP	3/4-10 NUT L.H. HEX (NC) (F/S)	1.000 EA
RM1010A06	VNYL CAP 1.125-14 701-89 BLACK S/R Q=	2.000 EA
HA2048A01	G8-27 SP 1-1/4 DIA C.R.ST(WELKER)	2.000 EA
MG2000A02	RUST VETO-377-HF HOUGHTON	0.001 GA
WD4006B01	TYPE O/B+ 3M SCOTCHLOK WIRE CONNECTOR	1.000 EA
HA6053A01ZP	CLAMP, CAPACITOR 2" DIA, WHITE ZINC PLAT	1.000 EA
MJ1000A02	GREASE, POLYREX EM EXXON (USe 4824-15A)	0.050 LB
85XU0407A04	#4-7 X 1/4 DRIVE PIN	2.000 EA
LB1009N	LABEL,ROTATION DIRECTION (ON ROLLS)	1.000 EA
LC0279A01	1PH, DV, FIX, GRINDER, CONN FOR LV	1.000 EA
SP9000A02	SP9005 SWITCH W/4 LEADS	1.000 EA
MG1500G03-5	LACQUER PRIMER, GRAY - 5 GAL	0.010 GA
MG1000G01	MUNSELL 5.93PB 3.81/ 2.71 HF BATTLESHIP	0.017 GA
LB1119N	WARNING LABEL	1.000 EA
LB1091	LABEL, WARNING BUFFERS	1.000 EA
NP3352L	ALUM NAMEPLATE - BALDOR BUFFER NO LOGOS	1.000 EA
37PA1016	PKG GRP, PRINT PK1035A06	1.000 EA
MN906	Baldor Buffer 6/13	1.000 EA

Accessories

Part Number	Description	Multiplier
GA16	PEDESTAL INDUSTRIAL, CAST IRON 6" - 10"	A8
GA14	PEDESTAL FABRICATED STEEL W/SHELVES	A8
GA20	PEDESTAL INDUSTRIAL, CAST IRON 8"-14"	A8
GA20E	PEDESTAL LIGHT INDUSTRIAL,STEEL	A8
A82	8" COTTON BUFFING WHEEL 3/4 " BORE	A8
BQ1-015-CC	1PH Brake, NEMA 1,110-125 VAC, 50/60Hz	P1
BQ1-015-CP	1PH Brake, Panel 110-125 VAC, 50/60 Hz	P1

No performance data has been assigned to this product.

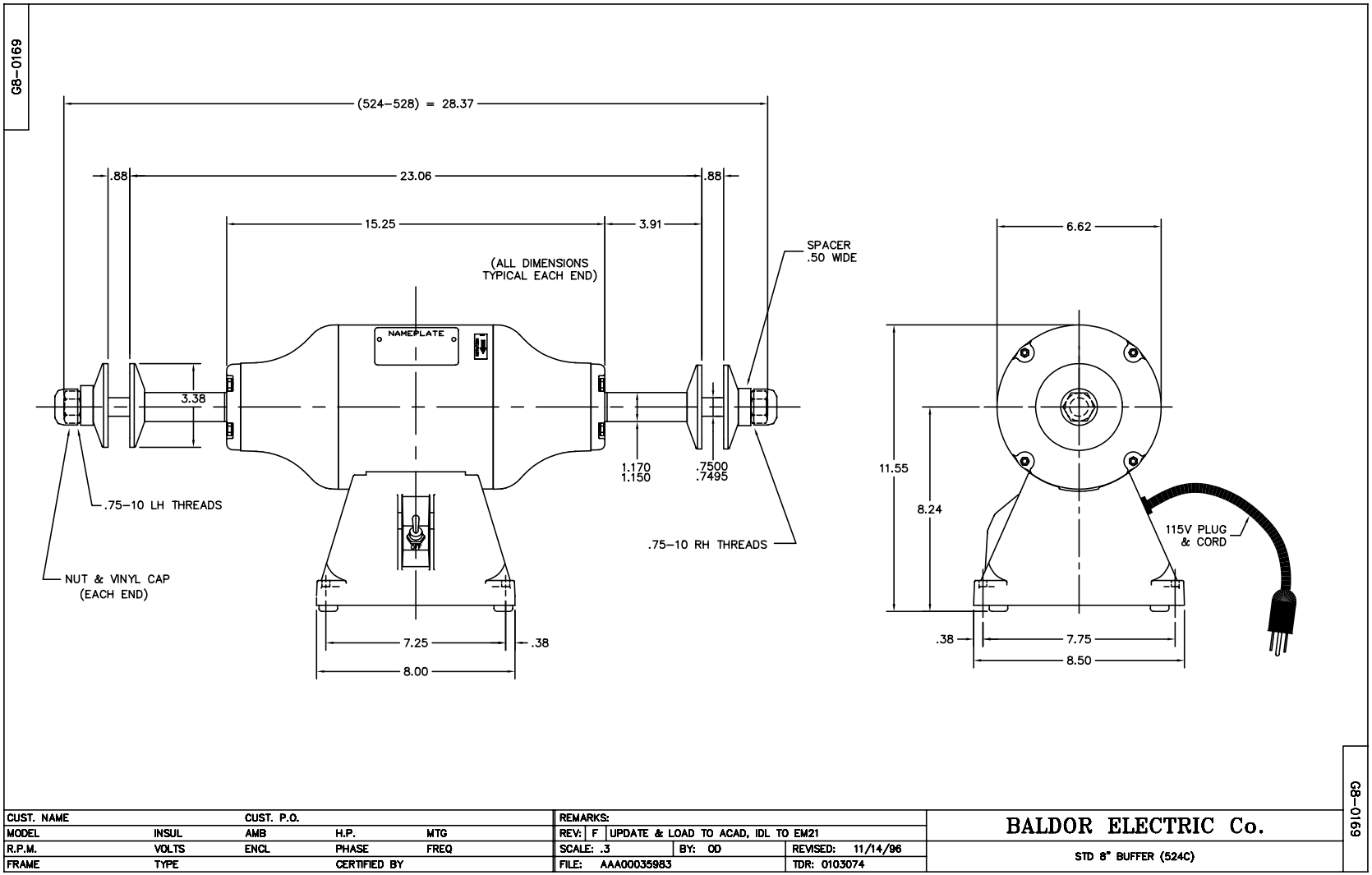
G8-0169
(524-528) = 28.37
.88
23.06
.88
15.25
3.91
(ALL DIMENSIONS
TYPICAL EACH END)
SPACER
.50 WIDE
NAMEPLATE
3.38
1.170
1.150
.7500
.7495
.75-10 LH THREADS
.75-10 RH THREADS
NUT & VINYL CAP
(EACH END)
7.25
.38
8.00
6.62
11.55
8.24
115V PLUG
& CORD
.38
7.75
8.50
G8-0169
CUST. NAME
CUST. P.O.
MODEL
INSUL
AMB
H.P.
MTG
R.P.M.
VOLTS
ENCL
PHASE
FREQ
FRAME
TYPE
CERTIFIED BY
REMARKS:
REV: F UPDATE & LOAD TO ACAD, IDL TO EM21
SCALE: .3
BY: OD
REVISED: 11/14/96
FILE: AAA00035983
TDR: 0103074
BALDOR ELECTRIC Co.
STD 8" BUFFER (524C)

CD0279

MOTOR

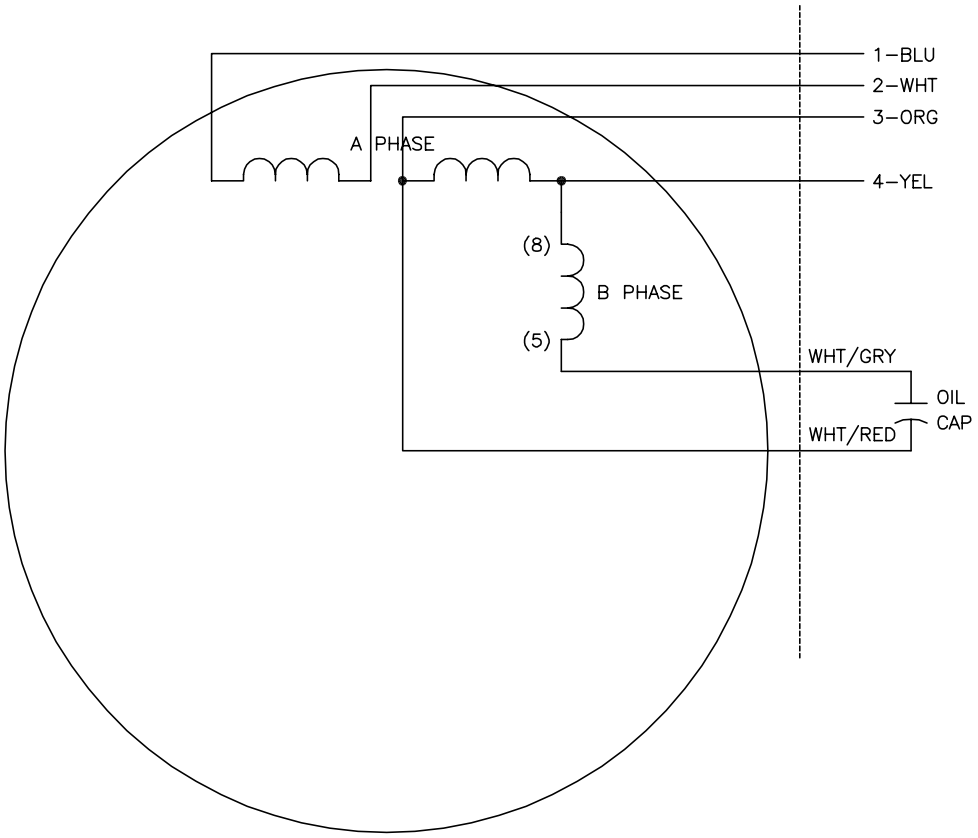

BASE

ON/OFF SWITCH
(USE #16 AWG LEADS ON SWITCH)

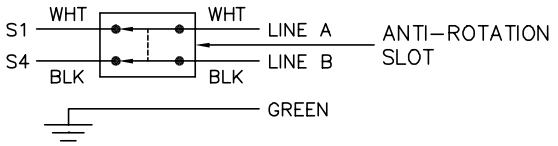

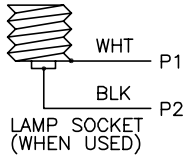

	S1	S4	JOIN
HIGH	1,P1	4	2,3,P2
LOW	1,3,P1	2,4,P2	–

OPTIONAL EUROPEAN CORD
ON/OFF SWITCH

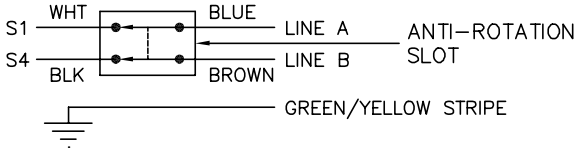

NOTES:

1. CONNECTIONS ARE SHOWN FOR CW ROTATION FACING END OPPOSITE SHAFT EXTENSION (OPP STD). FOR CCW ROTATION, INTERCHANGE (5) AND (8) INTERNALLY.
2. LEAD COLORS ARE OPTIONAL. LEADS MUST ALWAYS BE NUMBERED AS SHOWN.

REV. DESC: ADDED ANTI–ROTATION DETAIL TO RH SIDE OF SWITCH		
REV. LTR: E	VERSION: 01	TDR: 000000863536
FILE: \AAA\00028\193	REVISED: 09:52:27 07/23/2014	BY: ENCHALO
MTL: –		

BALDOR

TYPE C, DV, FIX, OPT. LIGHTED EYESHIELD, GRINDER

SH 1 of 1

CD0279