Fan Kits

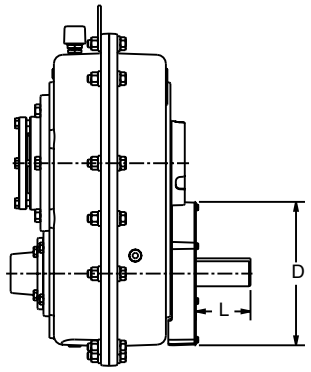



Reducer Size	Fan Kit No.	Dimensions		Wt. Lbs.
		D	L	
307	**307FKP**	9.5	4.9	4.5
315	**315FKP**	10.4	5.7	4.9
407	**407FKPB**	12.66	4.56	6.4
415	**415FKPB**	14.38	6.92	8.3
507	**507FKPB**	16.41	6.56	13.2
608	**608FKPB**	16.41	6.69	13.2
800	**800FKP**	16.41	9.93	13.2