Browning®

TorqTaper® Plus Backstop Kit Installation Instructions

Emerson Industrial Automation
7120 New Buffington Road
Florence, KY 41042
Application Engineering: 800 626 2093
www.emerson-ept.com

FORM
8917E
Revised
July 2011

⚠ WARNING

- Read and follow all instructions carefully.
- Disconnect and lock-out power before installation and maintenance. Working on or near energized equipment can result in severe injury or death.
- Do not operate equipment without guards in place. Exposed equipment can result in severe injury or death.
- Before installing the backstop, 'jog' the motor to determine the direction of rotation. Reverse motor direction of rotation if necessary to keep from starting against the backstop. If the motor is wired incorrectly and started against the backstop, the backstop will be permanently damaged and must be replaced.
- Petroleum based and synthetic lubricants, which contain anti-wear extreme pressure additives, must not be used in gearboxes with internal backstops. These additives decrease the backstop's ability to prevent reverse rotation resulting in backstop failure.

⚠ CAUTION

- Periodic inspections should be performed. Failure to perform proper maintenance can result in premature product failure and personal injury
- All electrical work should be performed by qualified personnel and be compliant with local and national electrical codes.

1. Backstop Kit Installation Instructions

- Gearboxes equipped with a backstop must be mounted in the 6 o'clock through 9 o'clock positions. (Shown in Figure 1-4.) Call Application Engineering for any other mounting position at 1-800-626-2093.

- Do not use a backstop on a gearbox mounted with the input shaft vertical down.

- Do not disassemble the cam and outer race subassembly.

1.1 Installation (107 Through 307SMTP):

The 107BSP through 307BSP backstop kit contains the following:

1 – Cam assembly
2 – Inner race
3 – Key
4 – Snap ring
5 – Gaskets
6 – Outer race mounting bolts
7 – Backstop cover
8 – Outer race

107SMTP through 307SMTP
Figure 1-1

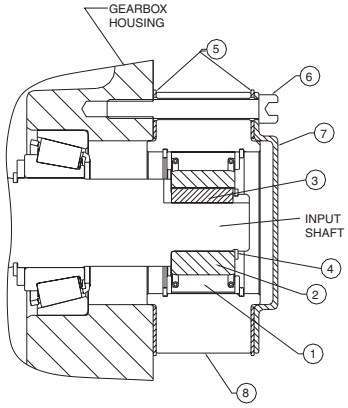

1.1.1 Remove the capscrews from the input cover and remove the cover and gasket from the gearbox housing.
1.1.2 Clean the gearbox housing surface where the backstop outer race mounts.
1.1.3 Insert the key (Item 3) into the keyseat of the input shaft.
1.1.4 Install the inner race (Item 2) onto the input shaft as shown in Figure 1-1.
1.1.5 Install the snap ring (Item 4).
1.1.6 Determine the desired direction of rotation of the input shaft.
1.1.7 Install the gasket on the outer race.
Note: Remove adhesive backing (if included) before installing gasket.
1.1.8 Position the backstop outer race (Item 8) and cam assembly (Item 1) onto the inner race (Item 2), making sure the arrow on the label attached to the outer race is pointing in the desired direction of rotation
of the input shaft.
1.1.9 Install the cover plate with capscrews supplied in the kit and tighten to the recommended value. (See bolt torque specifications Table 1-1.)
1.1.10 Rotate the input shaft by hand to confirm the correct direction of rotation.

1.2 Installation (315SMTP):

The 315BSP backstop kit contains the following:

1 – Cam assembly
2 – Inner race
3 – Key
4 – Snap ring
5 – Gaskets
6 – Outer race mounting bolts
7 – Backstop cover
8 – Outer race
9 – Adapter ring

Browning, Emerson, Emerson Industrial Automation and TorqTaper are trademarks of Emerson Electric Co. or one of its affiliated companies.
©2009, 2011 Emerson Power Transmission Corps., All Rights Reserved.
MCIM11026E • Form# 8917E • Printed in USA

EMERSON
Industrial Automation

Figure 1-2

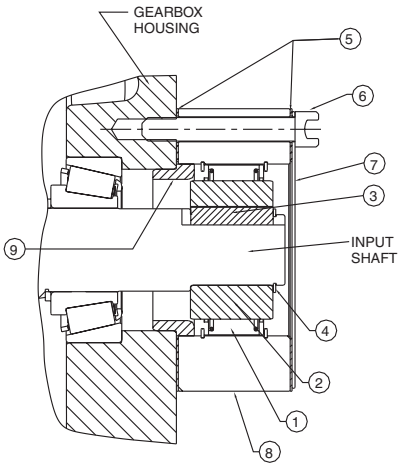

1.2.1 Remove the capscrews from the input cover and remove the cover and gasket from the gearbox housing.

1.2.2 Clean the gearbox housing surface where the backstop outer race mounts.

1.2.3 Insert the key (Item 3) into the keyseat of the input shaft.

1.2.4 Install the inner race (Item 2) onto the input shaft as shown in Figure 1-2.

1.2.5 Install the snap ring (Item 4).

1.2.6 Install the adapter ring (Item 9) as shown in Figure 1-2.

1.2.7 Determine the desired direction of rotation of the input shaft.

1.2.8 Install the gasket on the outer race.

Note: Remove adhesive backing (if included) before installing gasket.

1.2.9 Position the backstop outer race (Item 8) and cam assembly (Item 1) onto the inner race (Item 2), making sure the arrow on the label attached to the outer race is pointing in the desired direction of rotation of the input shaft.

1.2.10 Install the cover plate and second gasket with the capscrews supplied in the kit and tighten to the recommended value. (See bolt torque specifications Table 1-1.)

1.2.11 Rotate the input shaft by hand to confirm the correct direction of rotation.

1.3 Installation (407 through 800SMTP):

The 407BSP through 608BSP backstop kit contains the following:

1 – Cam assembly
2 – Inner race
3 – Key
4 – Snap ring
5 – Gaskets
6 – Outer race mounting bolts
7 – Backstop cover
8 – Outer race

1.3.1 Remove the capscrews from the input cover and remove the cover and gasket from the gearbox housing. **(Do not remove retainer plate.)**

1.3.2 Clean the surface where the backstop outer race mounts.

1.3.3 Insert the key (Item 3) into the keyseat of the input shaft.

1.3.4 Install the inner race (Item 2) onto the input shaft as shown in Figure 1-3.

Figure 1-3

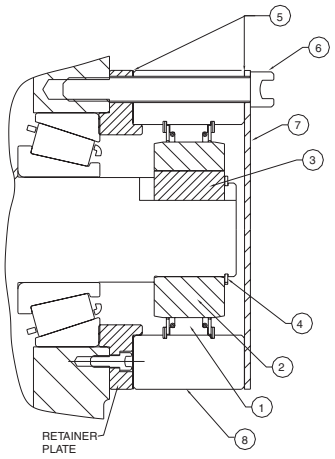

1.3.5 Install the snap ring (Item 4).

1.3.6 Determine the desired direction of rotation of the input shaft.

1.3.7 Install the gasket on the outer race.

Note: Remove adhesive backing (if included) before installing gasket.

1.3.8 Position the backstop outer race (Item 8) and cam assembly (Item 1) onto the inner race (Item 2), making sure the arrow on the label attached to the outer race is pointing in the desired direction of rotation of the input shaft.

1.3.9 Install the cover plate and second gasket with the capscrews supplied in the kit and tighten to the recommended value (See bolt torque specifications Table 1-1).

1.3.10 Rotate the input shaft by hand to confirm the correct direction of rotation.

Figure 1-4

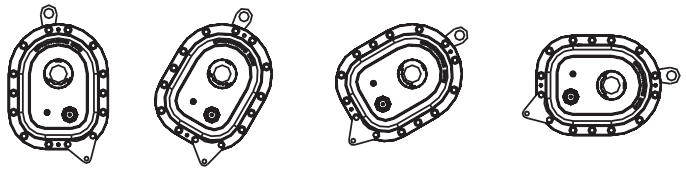

Backstop Bolt Torque Specifications
Table 1-1

Reducer Size	Bolt Size	TORQUE (FT-LBS)
107	1/4 - 20	8
115	1/4 - 20	8
203	1/4 - 20	8
207	3/8 - 16	29
215	3/8 - 16	29
307	3/8 - 16	29
315	1/2 - 13	70
407	1/2 - 13	70
415	1/2 - 13	70
507	5/8 - 11	140
608	5/8 - 11	140
800	3/4 - 10	250

Browning, Emerson, Emerson Industrial Automation and TorqTaper are trademarks of Emerson Electric Co. or one of its affiliated companies.
©2009, 2011 Emerson Power Transmission Corps., All Rights Reserved.
MCIM11026E • Form# 8917E • Printed in USA