Browning®

TorqTaper® Plus Fan Kit Installation Instructions

Emerson Industrial Automation
Power Transmission Solutions
7120 New Buffington Road
Florence, KY 41042
Application Engineering: 800 626 2093
www.emerson-ept.com

F O R M
9190
July 2009

⚠ WARNING

- Read and follow all instructions carefully.
- Disconnect and lock-out power before installation and maintenance. Working on or near energized equipment can result in severe injury or death.
- Do not operate equipment without guards in place. Exposed equipment can result in severe injury or death.

⚠ CAUTION

- Periodic inspections should be performed. Failure to perform proper maintenance can result in premature product failure and personal injury.
- All electrical work should be performed by qualified personnel and compliant with local and national electrical codes.

1. Fan Kit Installation

1.1 Attach the fan housing to the reducer with the flat head screws provided. Reducers are furnished with tapped holes surrounding the input shaft for this purpose. Tighten the flat head screws to the recommended value (see Bolt Torque Specification Table).

1.2 Rotate the reducer's input shaft until the keyway is in the 'up' position.

1.3 Place the key into the keyway of the input shaft and slide the fan blade into position with the hub away from the housing. Make sure the fan blade seats against the shaft shoulder. Attach the fan blade to the input shaft with the set screws provided. Tighten the set screws to the recommended value (see Bolt Torque Specification Table).

1.4 Attach the fan cover to the fan housing with the cap screws provided. Tighten the cap screws to the recommended value (see Bolt Torque Specification Table).

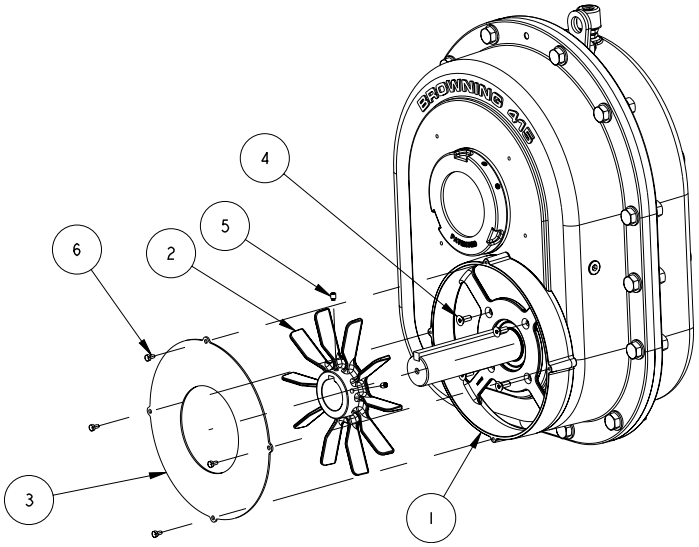

Fan Kit Parts Description

Item Number	Description
1	Fan Housing
2	Fan Blade
3	Fan Cover
4	Flat Head Cap Screws
5	Socket Set Screws
6	Hex Head Cap Screws

Reducer Size	Fan Housing		Fan Blade		Fan Cover	
	Flat Head Bolt Size	Ft Lbs	Set Screw Size	Ft Lbs	Cap Screw Size	Ft Lbs
307	3/8-16	29	3/8-16	24	1/4-20	12
315	3/8-16	29	3/8-16	24	1/4-20	12
407	3/8-16	29	3/8-16	24	1/4-20	12
415	3/8-16	29	3/8-16	24	1/4-20	12
507	3/8-16	29	3/8-16	24	1/4-20	12
608	3/8-16	29	3/8-16	24	1/4-20	12
800	3/8-16	29	3/8-16	24	1/4-20	12

Emerson, Browning and TorqTaper are trademarks of Emerson Electric Co. or one of its affiliated companies.
© 2009 Emerson Power Transmission, All Rights Reserved.
MCIM09021 • Form 9190 • Printed in USA

EMERSON™
Industrial Automation