Options and Accessories Sizes 107-800

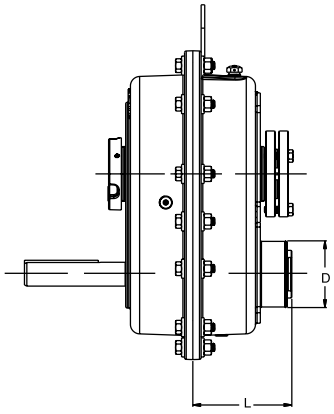

Size 107-800

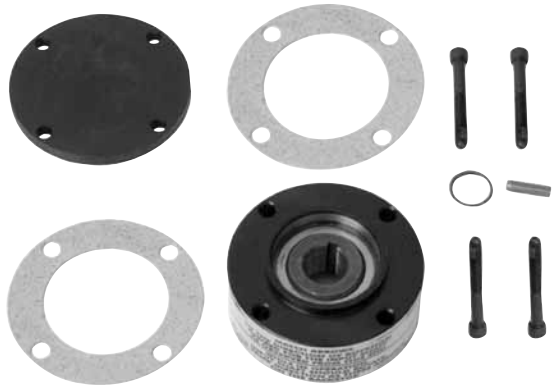

Backstop Kits

REDUCER SIZE	USE BACKSTOP KIT		DIMENSIONS		WT. LBS.
	PART NO.	RATIOS	D	L	
107	107BSP	ALL	3.000	4.336	2.4
115	115-203BSP		3.438	4.573	3.1
203			3.438	5.100	3.1
207	207BSP		4.750	5.695	7.4
215	215-307BSP		5.000	6.230	8.4
307			5.000	6.770	8.4
315	315BSP		6.000	7.780	16.2
407	407BSP		6.125	6.625	10.0
415	415BSP		6.815	7.500	13.0
507	507BSP		7.625	7.969	15.0
608	608BSP		8.375	9.500	17.0
800	800BSP		9.380	13.290	60.0



Torque Arm Kits

REDUCER SIZE	PART NO.
107	107TAP-H
115	115TAP-H
203	203TAP-H
207	207TAP-H
215	215TAP-H
307	307TAP-H
315	315TAP-H
407	407TAP-HB
415	415TAP-HB
507	507TAP-HB
608	608TAP-HB
800	800TAP-H