airmaster Ventilation

High Pressure Belt Drive Fans

MODEL HA



1 Year Warranty

FEATURES

- Available for Exhaust or Supply
- Epoxy Coated
- Precision Balanced Propellers
- Quiet
- " Energy Efficient

Made in the USA from domestic & foreign components

Catalog No.	Prop Dia.	HP	Fan RPM	Max BHP	0" SP CFM	1/8" SP CFM	1/4" SP CFM	3/8" SP CFM	1/2" SP CFM	Max Sones @5'	Ship Wt
HA24CA	24"	1/4	746	0.28	4398	3745				12.4	70
HA24DA	24"	1/3	805	0.37	4746	4210	2885			12.9	80
HA24FA	24"	1/2	980	0.64	5778	5409	4617			18.4	85
HA24HA	24"	3/4	1080	0.86	6367	6049	5502	4428		22.6	92
HA24JA	24"	1	1180	1.14	6957	6674	6257	5453	4462	26.3	111
HA24KA	24"	1-1/2	1340	1.63	7900	7658	7349	6867	6067	34.0	121
HA30DA	30"	1/3	530	0.36	6518	4821	2608			8.8	98
HA30FA	30"	1/2	640	0.55	7871	6735	4669			12.8	103
HA30HA	30"	3/4	730	0.85	8978	8080	6439	4690		19.3	108
HA30JA	30"	1	820	1.14	10085	9333	8114	6425		20.8	127
HA30KA	30"	1-1/2	930	1.67	11438	10804	9913	8579	7089	28.2	136
HA36FA	36"	1/2	561	0.56	9720	8211	5602			14.0	122
HA36HA	36"	3/4	650	0.83	11262	10143	7951			18.1	128
HA36JA	36"	1	720	1.10	12475	11533	9805			21.8	148
HA36KA	36"	1-1/2	820	1.65	14207	13429	12223	10377		26.3	157
HA36MA	36"	2	890	2.15	15420	14721	13739	12219	10464	30.3	172
HA42FA	42"	1/2	410	0.58	12797	9882				12.0	169
HA42HA	42"	3/4	453	0.83	14139	11686	7833			14.4	170
HA42JA	42"	1	500	1.08	15606	13517	10254			17.1	215
HA42KA	42"	1-1/2	583	1.66	18197	16533	14113			21.1	225
HA42MA	42"	2	635	2.20	19820	18339	16298	13666		24.8	235
HA42OA	42"	3	725	3.28	22629	21378	19787	17760	15381	31.8	255
HA48HA	48"	3/4	395	0.86	17392	14182				15.9	223
HA48JA	48"	1	420	1.13	18493	15544	10953			16.6	225
HA48KA	48"	1-1/2	485	1.67	21335	18883	15665			23.4	230
HA48MA	48"	2	535	2.31	23556	20848	18132	14264		26.1	245
HA48OA	48"	3	610	3.43	26858	24896	22832	20205		35.5	265
HA48PA	48"	5	690	4.79	30381	28610	26909	24888	22419	53.9	285
HA54JA	54"	1	301	1.11	21524	17049	8814			12.6	310
HA54KA	54"	1-1/2	353	1.65	25243	21902	15939			16.2	313
HA54MA	54"	2	383	2.20	27388	24450	19521	12944		18.7	320
HA54OA	54"	3	437	3.31	31250	28802	25241	20099	14178	23.4	370
HA54PA	54"	5	527	5.50	37686	35717	33353	30099	25907	31.8	385
HA54QA	54"	7-1/2	600	8.13	42906	41174	39308	36935	33896	41.4	455
HA60KA	60"	1-1/2	295	1.64	28923	24368	16985			22.1	395
HA60MA	60"	2	328	2.20	32158	28269	22401			26.1	400
HA60OA	60"	3	373	3.29	36570	33294	28826	22824		30.3	450
HA60PA	60"	5	447	5.50	43825	41170	38024	33975		44.3	465
HA60QA	60"	7-1/2	510	8.18	50002	47680	45165	42090	38385	57.2	535
HA60RA	60"	10	570	11.31	55885	53786	51667	49180	46262	68.5	555

See Page 58 For EDP# And List Price

NOTES: If Motor & Drive to be shipped separately: Use above EDP Numbers and add "K" suffix. Example: 42500K

Fans ordered with Explosion Proof Motors will always be shipped mounted. Consult factory for Two Speed Motors, Explosion Proof Motors, Motors requiring Thermal Overload Protection, Dual Belt and Variable Pitch Drives & Cost of Epoxy Coating on Props.

For Supply Duty, add "S" prefix to EDP Number and use list price divided by 0.80. Supply Duty fans are custom orders and are non-cancelable, non returnable once in production.

MODEL HA

Single Speed, Open Drip Proof
1 Phase, 115V
Fans With Motor And Drive Shipped Mounted

EDP No.	Catalog No.	List Price
42500	HA24CA	$1,697
42509	HA24DA	$1,730

1 Phase, 115/230V

EDP No.	Catalog No.	List Price
42530	HA24FA	$2,003
42545	HA24HA	$2,053
42563	HA24JA	$1,994
42575	HA24KA	$2,289
42605	HA30FA	$2,213
42624	HA30HA	$2,216
42639	HA30JA	$2,278
42657	HA30KA	$2,613
42672	HA36FA	$2,375
42684	HA36HA	$2,414
42702	HA36JA	$2,479
42717	HA36KA	$2,789
42756	HA42FA	$2,886
42768	HA42HA	$2,820
42780	HA42JA	$2,897
42798	HA42KA	$3,359
42828	HA48HA	$3,293
42840	HA48JA	$3,146
42855	HA48KA	$3,712
42909	HA54JA	$4,742
42921	HA54KA	$5,007
42963	HA60KA	$5,478

3 Phase, 230/460V

EDP No.	Catalog No.	List Price
42503	HA24CA	$1,791
42512	HA24DA	$1,889
42533	HA24FA	$1,940
42548	HA24HA	$1,943
42566	HA24JA	$1,915
42581	HA24KA	$2,111
42593	HA30DA	$2,031
42608	HA30FA	$2,090
42627	HA30HA	$2,151
42642	HA30JA	$2,191
42663	HA30KA	$2,304
42675	HA36FA	$2,313
42687	HA36HA	$2,347
42705	HA36JA	$2,392
42720	HA36KA	$2,433
42744	HA36MA	$2,581
42759	HA42FA	$2,847
42771	HA42HA	$2,747
42783	HA42JA	$2,913
42801	HA42KA	$2,953
42813	HA42MA	$3,085
42822	HA42OA	$3,390
42831	HA48HA	$3,180
42843	HA48JA	$3,379
42858	HA48KA	$3,376
42870	HA48MA	$3,310
42882	HA48OA	$3,567
42900	HA48PA	$3,750
42912	HA54JA	$4,640
42924	HA54KA	$4,591
42933	HA54MA	$4,782
42939	HA54OA	$4,818
42945	HA54PA	$5,265
42957	HA54QA	$6,732
42966	HA60KA	$5,126
42975	HA60MA	$5,164
42984	HA60OA	$5,192
42996	HA60PA	$5,639
43011	HA60QA	$7,230
43020	HA60RA	$7,288

Single Speed, Totally Enclosed
1 Phase, 115/230V

◀ = EDP in Stock

EDP No.	Catalog No.	List Price
42518	HA24DA	$1,993
42539	HA24FA	$2,114
42554	HA24HA	$2,135
◀ 42569	HA24JA	$2,112
42584	HA24KA	$2,675
42596	HA30DA	$2,207
42618	HA30FA	$2,232
42630	HA30HA	$2,355
◀ 42648	HA30JA	$2,392
42666	HA30KA	$2,371
42678	HA36FA	$2,496
42696	HA36HA	$2,452
◀ 42708	HA36JA	$2,589
◀ 42732	HA36KA	$2,534
42762	HA42FA	$3,003
42774	HA42HA	$2,865
42786	HA42JA	$3,115
42807	HA42KA	$3,254
42834	HA48HA	$3,379
42846	HA48JA	$3,416
42861	HA48KA	$3,518
42915	HA54JA	$4,874
42927	HA54KA	$5,058
42969	HA60KA	$5,403

Power ratings (BHP) do not include drive losses. Performance shown is for installation Type A: Free Inlet, Free Outlet. Performance ratings do not include the effects of appurtenances in the airstream.

Fans Less Motor & Drive

EDP No.	Catalog No.	List Price
95100	HA24	$1,182
95104	HA30	$1,377
95108	HA36	$1,576
95112	HA42	$2,070
95116	HA48	$2,330
95120	HA54	$3,447
95124	HA60	$3,677

WR Heavy Duty Exhaust Shutters

EDP No.	Catalog No.	Shutter Size	Number of Panels	Motor Kit (Required number for WRHD)	List Price
22747	WRHD48	50” x 50”	2	MK-4621 (1)	$1,239
22748	WRHD54	56” x 56”	2	MK-4621 (1)	$1,759
22749	WRHD60	62” x 62”	3	MK-4620 & MK-4621	$1,929

High Pressure Belt Drive Fans

Model HA And Accessories



1 Year Warranty
Single Speed, Totally Enclosed
3 Phase, 230/460V

◄ = EDP in Stock

	EDP No.	Catalog No.	List Price
	42506	HA24CA	$1,921
	42521	HA24DA	$1,895
	42542	HA24FA	$2,006
◄	42557	HA24HA	$2,060
	42572	HA24JA	$1,976
	42587	HA24KA	$2,265
	42599	HA30DA	$2,102
	42621	HA30FA	$2,207
	42633	HA30HA	$2,262
	42651	HA30JA	$2,301
	42669	HA30KA	$2,283
	42681	HA36FA	$2,414
	42699	HA36HA	$2,359
◄	42711	HA36JA	$2,496
◄	42735	HA36KA	$2,589
	42753	HA36MA	$2,622
	42765	HA42FA	$2,941
	42777	HA42HA	$2,970
	42789	HA42JA	$2,928
◄	42810	HA42KA	$3,113
	42816	HA42MA	$3,124
	42825	HA42OA	$3,610
	42837	HA48HA	$3,326
	42849	HA48JA	$3,340
	42864	HA48KA	$3,436
◄	42876	HA48MA	$3,437
◄	42891	HA48OA	$3,787
	42903	HA48PA	$4,259
	42918	HA54JA	$4,657
	42930	HA54KA	$4,772
	42936	HA54MA	$4,780
	42942	HA54OA	$4,993
◄	42951	HA54PA	$5,281
	42960	HA54QA	$6,015
	42972	HA60KA	$5,309
	42981	HA60MA	$5,214
	42990	HA60OA	$5,679
	43005	HA60PA	$5,889
◄	43017	HA60QA	$6,693
	43026	HA60RA	$8,337

HA DIMENSIONS

Model	See Fig.	A	B	C	D	E	G	H	K	No. Holes
HA24	1	24-7/16	1	2-1/2	15-3/16	30	-	14-1/8	5/8	8
HA30	1	30-1/2	1	2-5/8	18-5/8	36	-	17-1/8	5/8	8
HA36	1	36-1/2	1-1/2	3-1/4	19-1/8	42	-	20-1/8	5/8	8
HA42	2	42-1/2	2	3-1/4	23-3/4	48	18-1/4	-	5/8	12
HA48	2	48-1/2	2	3-1/4	24-7/8	54	18-1/4	-	5/8	12
HA54	2	54-1/2	2	3-1/4	23-7/16	60	18-1/4	-	5/8	12
HA60	2	60-1/2	2	3-1/4	23-7/16	66	18-1/4	-	5/8	12

Wall opening size is larger than panel size.

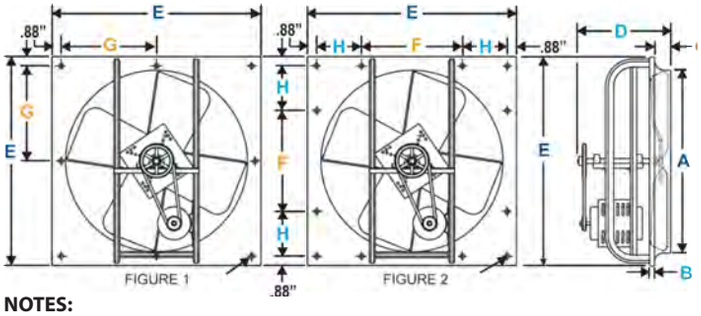

NOTES:
If used for Intake, a Motor Actuator Kit must be utilized with shutter.
See page 60 for EASR and WC shutter selection/installation information, ship weights and cautions.

See page 57 for WRHD Heavy Duty Shutter information.

Wall Shutters
Recommended Optional Accessories

EDP No.	Catalog No.	List Price
22975	EASR-MF-26"	$186
22976	EASR-MF-32"	$227
22977	EASR-MF-38"	$329
22978	EASR-MF-44"	$384
22979	EASR-MF-50"	$447
22980	EASR-MF-56"	$538
22748	WRHD54"	$1,759
22981	EASR-MF-62"	$601
22749	WRHD60"	$1,929

See page 91 for Motor Kits
**Motor kits for motorized wall louvers.

Wall Collar

EDP No.	Catalog No.	List Price
06887	WS24	$372
06888	WS30	$562
06889	WS36	$598
06890	WS42	$690
06891	WS48	$798
06892	WS54	$1,313
06893	WS60	$1,650

See page 62 for prop (front) and motor (rear) side guard dimensions.
NOTE: When an EASR or WC shutter is used for exhaust or supply and mounted remote from the fan, a WS Wall Collar is not needed.
The shutter is installed directly on the wall and a Motor Actuator Kit must be utilized.
• Wall Collar and/or Guard shipped unassembled for ease of handling. WS Wall Collars are shipped knocked down.
WC Supply Shutters are not weather resistant. It is recommended that the WC be used with a weatherhood.
For Weatherhood dimensions see page 62. EASR-MF44 – EASRMF56 are two panel construction EASR-MF62 is three panel.

MODEL HA And Accessories
Wall Collar

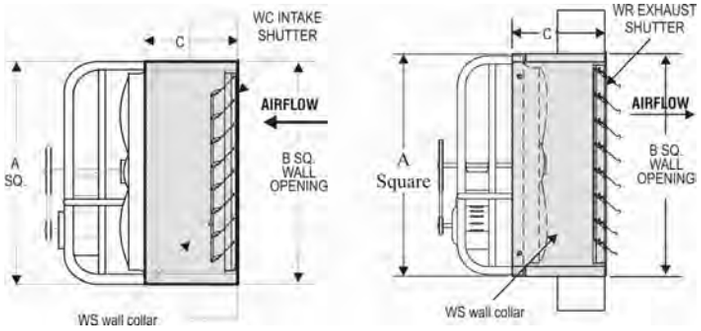

WALL COLLAR DIMENSIONS

Size	A Sq.	B Sq.	C
24”	30	31	14
30”	36	37	14 1/2
36”	42	43	17
42”	48	49	19
48”	54	55	21
54”	60	61	23
60”	66	67	25

Wall Shutters
Automatic Supply

EDP No.	Catalog No.	List Price
22641	WC24	$304
22651	WC30	$414
22661	WC36	$520
22671	WC42	$815
22681	WC48	$911
22691	WC54	$1,122
22701	WC60	$1,346

See page 88 for Motor Kits

Safety Guards
Prop Side (Front)

EDP No.	Catalog No.	Ship Wt	List Price
23675	24FG	15	$352
23680	30FG	19	$385
23685	36FG	27	$471
23690	42FG	34	$559
23695	48FG	40	$610
23700	54FG	75	$717
23705	60FG	90	$825

Motor Side (Rear)

EDP No.	Catalog No.	Ship Wt	List Price
23620	24RG	28	$463
23625	30RG	37	$496
23630	36RG	64	$811
23635	42RG	75	$1,039
23640	48RG	85	$1,267
23645	54RG	92	$1,450
23650	60RG	102	$1,647

Weather Hoods

EDP No.	Catalog No.	Description	List Price
99915	WH24	Hood for 24” Unit	$957
99916	WH30	Hood for 30” Unit	$1,192
99917	WH36	Hood for 36” Unit	$1,475
99921	WH42	Hood for 42” Unit	$1,722
99923	WH48	Hood for 48” Unit	$1,899
99918	WH54	Hood for 54” Unit	$2,346
99919	WH60	Hood for 60” Unit	$2,558

Supply Motor Kits

EDP No.	Catalog No.	Description	List Price
22900	MK5047-B	120/240V, for 9”- 36” supply shutters	$268
22905	MK5047-C	440V, for 9”- 36” supply shutters	$268
22908	MK5047-E	550V, for 9”- 36” supply shutters	$268
22910	MK-4782-F	120/240V, for 42”-54” supply shutters	$303
22915	MK-4782-C	440V, for 42”- 54” supply shutters	$303
22918	MK-4782-E	550V, for 42”- 54” supply shutters	$303

EASR & WC SHUTTERS
Aluminum Exhaust & Supply Shutters



FEATURES

- Indoor / Outdoor, Wall / Ceiling Mounts
- Opens with Fan Pressure
- Gravity Closes When Fan is Turned Off

Made in the USA from domestic & foreign components

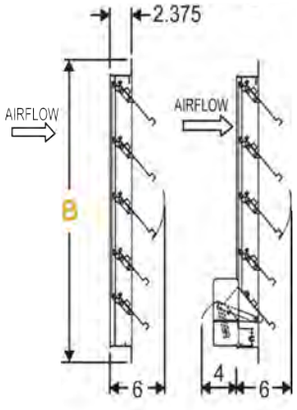

Exhaust

EDP No.	Catalog No.	For Fans Diameter	Type	Inside (A)	Outside (B)	Required Opening (Sq. In.)	No. Holes 17/64" Dia.	Sections (Panels)	Ship Wt.	Motor Kits	List Price
22970	EASR-MF-10"	10"	EXHAUST	10" SQ.	13" SQ.	10 3/4"	8	1	3	MTR-556-SP	$80
22971	EASR-MF-12"	10"	EXHAUST	12" SQ.	15" SQ.	12 3/4"	8	1	3	MTR-556-SP	$86
22972	EASR-MF-14"	12"	EXHAUST	14" SQ.	17" SQ.	14 3/4"	8	1	4	MTR-556-SP	$101
22973	EASR-MF-18"	16"	EXHAUST	18" SQ.	21" SQ.	18 3/4"	12	1	5	MTR-556-SP	$131
22974	EASR-MF-20"	18"	EXHAUST	20" SQ.	23" SQ.	20 3/4"	12	1	5	MTR-556-SP	$144
22975	EASR-MF-26"	24"	EXHAUST	26" SQ.	29" SQ.	26 3/4"	12	1	9	MTR-556 SP	$186
22976	EASR-MF-32"	30"	EXHAUST	32" SQ.	35" SQ.	32 3/4"	16	1	12	MTR-556-SP	$227
22977	EASR-MF-38"	36"	EXHAUST	38" SQ.	41" SQ.	38 3/4"	16	2	16	MTR-556-DP	$329
22978	EASR-MF-44"	42"	EXHAUST	44" SQ.	47" SQ.	44 3/4"	20	2	20	MTR-556-DP	$384
22979	EASR-MF-50"	48"	EXHAUST	50" SQ.	53" SQ.	50 3/4"	20	2	23	MTR-556-DP	$447
22980	EASR-MF-56"	54"	EXHAUST	56" SQ.	59" SQ.	56 3/4"	24	2	27	MTR-556-DP	$538
22981	EASR-MF-62"	60"	EXHAUST	62" SQ.	65" SQ.	62 3/4"	24	3	30	MTR-885-DP	$601

Supply

EDP No.	Catalog No.	For Fans Diameter	Type	Inside (A)	Outside (B)	Required Opening (Sq. In.)	No. Holes 17/64" Dia.	Sections (Panels)	Ship Wt.	Motor Kits	List Price
22754	WC9	10"	SUPPLY	11" SQ.	14" SQ.	11 3/4"	8	1	3	MK-5047	$104
22755	WC10	10"	SUPPLY	12" SQ.	15" SQ.	12 3/4"	8	1	4	MK-5047	$157
22611	WC12	12"	SUPPLY	14" SQ.	17" SQ.	14 3/4"	8	1	4	MK-5047	$157
22621	WC16	16"	SUPPLY	18" SQ.	21" SQ.	18 3/4"	12	1	5	MK-5047	$189
22631	WC18	18"	SUPPLY	20" SQ.	23" SQ.	20 3/4"	12	1	7	MK-5047	$226
22641	WC24	24"	SUPPLY	26" SQ.	29" SQ.	26 3/4"	12	1	9	MK-5047	$304
22651	WC30	30"	SUPPLY	32" SQ.	35" SQ.	32 3/4"	16	1	12	MK-5047	$414
22661	WC36	36"	SUPPLY	38" SQ.	41" SQ.	38 3/4"	16	1	17	MK-5047	$520
22671	WC42	42"	SUPPLY	44" SQ.	47" SQ.	44 3/4"	20	2	22	MK-4782	$815
22681	WC48	48"	SUPPLY	50" SQ.	53" SQ.	50 3/4"	20	2	25	MK-4782	$911
22691	WC54	54"	SUPPLY	56" SQ.	59" SQ.	56 3/4"	24	2	28	MK-4782	$1,122
22701	WC60	60"	SUPPLY	62" SQ.	65" SQ.	62 3/4"	24	3	31	MK-4782 (1) and MK-5047 (1) required	$1,346

See page 59 for pricing of optional motor conversion kits. EASR-MF-44 –EASR-MF-56 are two panel construction. EASR-MF-62 is three panel. If used for Supply Duty, a Motor Actuator Kit must be utilized with shutter.

EASR & WC SELECTION / INSTALLATION INFORMATION AND CAUTIONS: The velocity profile near the fan blade tips (spot velocity) is non-uniform and will vary by fan model. This spot velocity condition can damage a backdraft damper if it exceeds the maximum recommended backdraft damper velocity. For this reason, it is recommended that the backdraft damper be mounted a minimum of 1/3 the fan diameter a way from the fan outlet. It is a good practice to contact the factory when applications have a velocity approaching the maximum allowed or when the fan motor horsepower is 7-1/2 and above, or when the fan spot velocity is in excess of the backdraft damper's maximum velocity. See page 57 for WRHD Heavy Duty Shutter information. **NOTE**: When an EASR or WC Shutter is used for exhaust or supply and mounted remote from the fan, a WS Wall Collar is not needed. The shutter is installed directly on the wall and a Motor Actuator Kit must be utilized.

EASR & WC SHUTTERS
WS Wall Collars



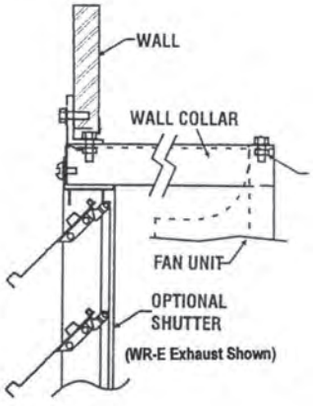

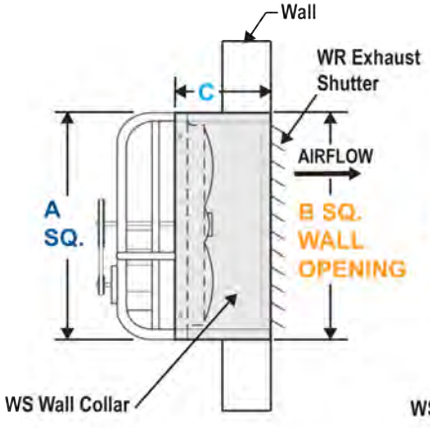

Exhaust Mode

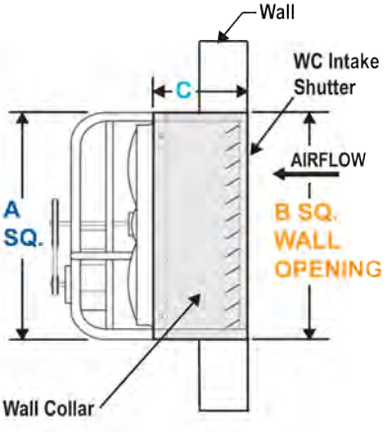

Supply Mode

Catalog No.	Prop Dia.	A Sq.	B Wall Opening	C	Ship Wt.	Exhaust Shutter	Supply Shutter	Safety Motor Side (Rear) Guard*
WS10	10 EPR	14	15	12	14	EASR-MF-10”	WC9	N/R
WS12	12	16	17	12	15	EASR-MF-12”	WC10	12RG
WS16E	16 EPR	20	21	12	20	EASR-MF-14”	WC12	N/R
WS18E	16	22	23	12	20	EASR-MF-18”	WC16	16RG
WS18E	18 EPR	22	23	12	19	EASR-MF-18”	WC16	N/R
WS18	18	24	25	12	19	EASR-MF-20”	WC18	18RG
WS24	24	30	31	14	31	EASR-MF-26”	WC24	24RG
WS30	30	36	37	14-1/2	45	EASR-MF-32”	WC30	30RG
WS36	36	42	43	17	61	EASR-MF-38”	WC36	36RG
WS42	42	48	49	19	89	EASR-MF-42”	WC42	42RG
WS48	48	54	55	21	112	EASR-MF-50”	WC48	48RG
WS54	54	60	61	23	149	EASR-MF-56”	WC54	54RG
WS60	60	66	67	25	178	EASR-MF-62”	WC60	60RG

*Safety motor side (rear) guards are included on all EPR, and 18” & 24” PD series fans. See page 62 for motor (rear) side guard dimensions.
For epoxy coating of Wall Collars, add $285 to list price.

NOTES:

WS wall collars are shipped knocked down. Fan not included with WS wall collars.
Wall collars are galvanized.

WH Weather Hoods
FG & RG

MADE IN USA

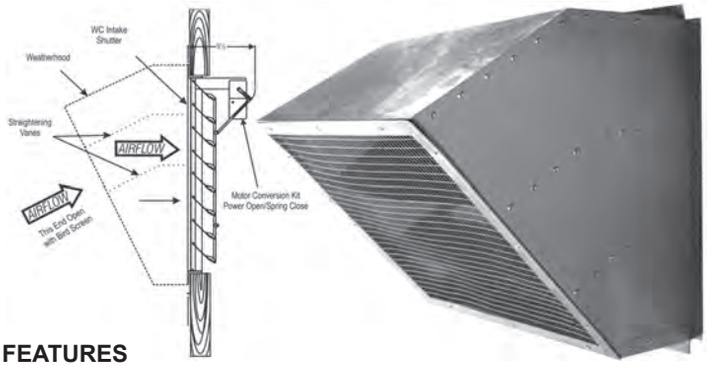

FEATURES

- Galvanized
- All Steel Construction
- Bird Screen
- Turning Vanes

EDP No.	Catalog No.	Size	Ship Wt.	List Price
99915	WH24	Hood for 24” Unit	67	$957
99916	WH30	Hood for 30” Unit	168	$1,192
99917	WH36	Hood for 36” Unit	206	$1,475
99921	WH42	Hood for 42” Unit	231	$1,722
99923	WH48	Hood for 48” Unit	303	$1,899
99918	WH54	Hood for 54” Unit	342	$2,346
99919	WH60	Hood for 60” Unit	384	$2,558

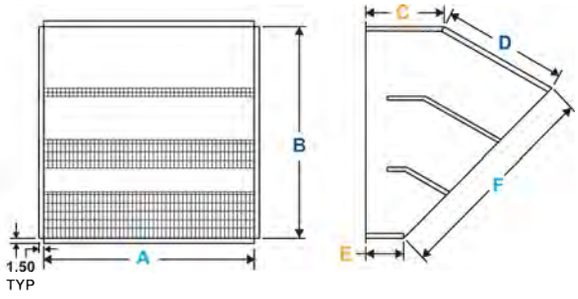

Used on 24” - 60” propeller wall fans.

For epoxy coating of Weatherhoods, add $285 to list price.

Dimensions

Cat. No.	A	B	C	D	E	F
WH24	30.50	30.50	15.29	18.06	9.43	30.50
WH30	36.50	36.50	18.30	21.62	11.28	36.50
WH36	42.50	42.50	21.31	25.17	13.14	42.50
WH42	48	48	19.42	28.43	10.19	48
WH48	54	54	21.04	31.98	10.65	54
WH54	60	60	22.88	35.54	11.34	60
WH60	66	66	24.04	38.59	11	66

Weatherhoods shipped knocked down for field assembly

FEATURES

- Galvanized construction
- Removable mounting flanges on RG rear guard
- Shipped knocked down
- Easy to assemble
- 1/2” X 1” Wire Mesh Guard

RG Rear Guard

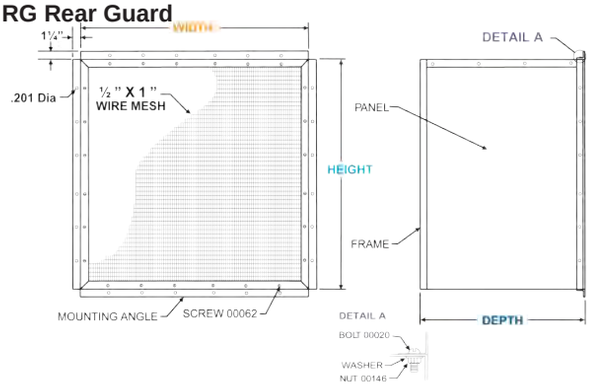

EDP No.	Model	Height	Width	Depth	Frame Material	Ship Wt	List Price
23605	12RG	16.25	16.25	16	20 Ga.	15	$307
23610	16RG	22.25	22.25	16	20 Ga.	20	$385
23615	18RG	24.25	24.25	16	20 Ga.	22	$438
23620	24RG	30.54	30.54	25	20 Ga.	28	$463
23625	30RG	36.54	36.54	25	18 Ga.	42	$496
23630	36RG	42.57	42.57	28	18 Ga.	75	$811
23635	42RG	48.57	48.57	34.5	18 Ga.	101	$1,039
23640	48RG	54.57	54.57	36.5	18 Ga.	122	$1,267
23645	54RG	60.57	60.57	42.5	18 Ga.	335	$1,450
23650	60RG	66.57	66.57	44.5	18 Ga.	348	$1,647

FG Front Guard

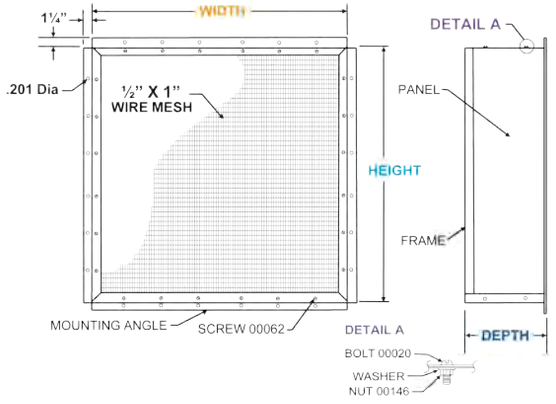

EDP No.	Model	Height	Width	Depth	Ship Weight	List Price
23660	12FG	13.75	13.75	6	7	$264
23665	16FG	19.75	19.75	6	10	$281
23670	18FG	21.75	21.75	6	11	$319
23675	24FG	27.75	27.75	6	15	$352
23680	30FG	33.75	33.75	6	18	$385
23685	36FG	39.75	39.75	6	28	$471
23690	42FG	45.75	45.75	6	35	$559
23695	48FG	51.75	51.75	6	40	$610
23700	54FG	57.75	57.75	6	43	$717
23705	60FG	63.75	63.75	6	48	$825