C QD SHEAVES

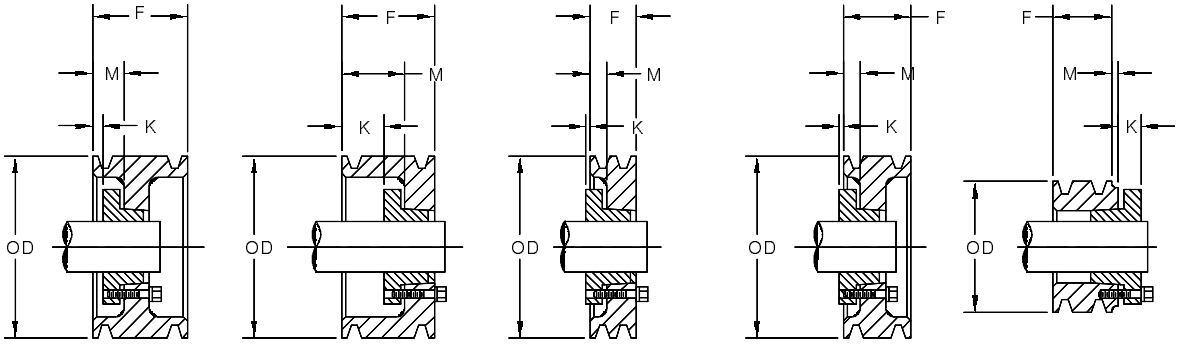

TYPE A TYPE B TYPE C TYPE D TYPE E

1-Groove						F = 1.38
O.D.▲	Part No.	Description	Wt.	Type†	M	K
7.4	**455773**	1C7.0-SF	9.0	C1	0.13	0.82
7.9	**455774**	1C7.5-SF	11.0	C1	0.13	0.82
8.4	**455775**	1C8.0-SF	11.0	C1	0.13	0.82
8.9	**455776**	1C8.5-SF	12.0	C1	0.13	0.82
9.4	**455777**	1C9.0-SF	12.0	C1	0.13	0.82
9.9	**455778**	1C9.5-SF	13.0	C1	0.13	0.82
10.4	**455779**	1C10.0-SF	14.0	C2	0.13	0.82
10.9	**455780**	1C10.5-SF	14.0	C2	0.13	0.82
11.4	**455781**	1C11.0-SF	16.0	C2	0.13	0.82
12.4	**455782**	1C12.0-SF	17.0	C2	0.13	0.82
13.4	**455783**	1C13.0-SF	19.0	C3	0.13	0.82
14.4	**455784**	1C14.0-SF	21.0	C3	0.13	0.82
16.4	**455785**	1C16.0-SF	24.0	C3	0.13	0.82
18.4	**455786**	1C18.0-SF	27.0	C3	0.13	0.82
20.4	**455787**	1C20.0-SF	31.0	C3	0.13	0.82
24.4	**455788**	1C24.0-SF	38.0	C3	0.13	0.82

3-Groove						F = 3.38
O.D.▲	Part No.	Description	Wt.	Type†	M	K
5.4	**455806**	+3C5.0-SD	9.0	A1	1.31	0.62
5.9	**455807**	+3C5.5-SD	10.0	A1	1.31	0.62
6.4	**455808**	+3C6.0-SF	10.0	A1	1.31	0.37
7.4	**455809**	3C7.0-SF	20.0	A1	1.13	0.18
7.9	**455810**	3C7.5-SF	23.0	A1	1.31	.037
8.4	**455811**	3C8.0-E	33.0	B1	1.75	0.55
8.9	**455812**	3C8.5-E	35.0	B1	1.75	0.55
9.4	**455813**	3C9.0-E	36.0	B1	1.75	0.55
9.9	**455814**	3C9.5-E	37.0	B1	1.75	0.55
10.4	**455815**	3C10.0-E	39.0	B1	1.75	0.55
10.9	**455816**	3C10.5-E	39.0	B1	1.75	0.55
11.4	**455817**	3C11.0-E	40.0	B1	1.75	0.55
12.4	**455818**	3C12.0-E	43.0	B2	1.75	0.55
13.4	**455819**	3C13.0-E	45.0	B3	1.75	0.55
14.4	**455820**	3C14.0-E	51.0	B3	1.75	0.55
16.4	**455821**	3C16.0-E	59.0	A3	1.31	0.12
18.4	**455822**	3C18.0-E	55.0	D3	0.81	0.38
20.4	**455823**	3C20.0-E	60.0	D3	1.00	0.20
24.4	**455824**	3C24.0-E	75.0	D3	1.00	0.20
27.4	**456013**	3C27.0-F	91.0	D3	0.81	0.61
30.4	**455825**	3C30.0-F	104.0	D3	0.81	0.61
36.4	**455826**	3C36.0-F	133.0	D3	0.81	0.61
44.4	**455827**	3C44.0-F	176.0	D3	0.81	0.61
50.4	**455828**	3C50.0-F	211.0	D3	0.81	0.61

2-Groove						F = 2.37
O.D.▲	Part No.	Description	Wt.	Type†	M	K
7.4	**455789**	2C7.0-SF	18.0	D1	0.81	0.13
7.9	**455790**	2C7.5-SF	20.0	D1	0.81	0.13
8.4	**455791**	2C8.0-SF	19.0	D1	0.81	0.13
8.9	**455792**	2C8.5-SF	20.0	D1	0.81	0.13
9.4	**455793**	2G9.0-SF	21.0	D1	0.81	0.13
9.9	**455794**	2C9.5-SF	22.0	D1	0.81	0.13
10.4	**455795**	2C10.0-SF	23.0	D2	0.81	0.13
10.9	**455796**	2C10.5-SF	23.0	D2	0.81	0.13
11.4	**455797**	2C11.0-SF	25.0	D2	0.81	0.13
12.4	**455798**	2C12.0-SF	27.0	D2	0.56	0.38
13.4	**455799**	2C13.0-SF	29.0	D3	0.56	0.38
14.4	**455800**	2C14.0-SF	34.0	D3	0.56	0.38
16.4	**455801**	2C16.0-SF	39.0	D3	0.63	0.32
18.4	**455802**	2C18.0-SF	39.0	D2	0.63	0.32
20.4	**455803**	2C20.0-SF	43.0	D3	0.56	0.38
24.4	**455804**	2C24.0-SF	55.0	D3	0.56	0.38
27.4	**456012**	2C27.0-F	72.0	C3	0.56	0.86
30.4	**456805**	2C30.0-F	82.0	C3	0.56	0.86

4-Groove						F = 4.37
O.D.▲	Part No.	Description	Wt.	Type†	M	K
5.4	**455829**	+4C5.0-SD	11.0	A1	1.56	0.87
5.9	**455830**	+4C5.5-SD	12.0	A1	1.56	0.87
6.4	**455831**	+4C6.0-SF	11.0	A1	1.56	0.62
7.4	**455832**	4C7.0-SF	23.0	A1	1.56	0.62
7.9	**455833**	4C7.5-SF	25.0	A1	1.50	0.56
8.4	**455834**	4C8.0-E	36.0	A1	2.00	0.80
8.9	**455835**	4C8.5-E	39.0	A1	2.00	0.80
9.4	**455836**	4C9.0-E	39.0	A1	2.13	0.93
9.9	**455837**	4C9.5-E	41.0	A1	2.00	0.80
10.4	**455838**	4C10.0-E	43.0	A1	2.13	0.93
10.9	**455839**	4C10.5-E	44.0	A1	2.13	0.93
11.4	**455840**	4C11.0-E	46.0	A1	2.13	0.93
12.4	**455841**	4C12.0-E	50.0	A2	2.13	0.93
13.4	**455842**	4C13.0-E	53.0	A3	2.00	0.80
14.4	**455843**	4C14.0-E	59.0	A2	1.81	0.62
16.4	**455844**	4C16.0-E	69.0	A3	1.94	0.74
18.4	**455845**	4C18.0-E	66.0	A3	1.88	0.68
20.4	**455846**	4C20.0-E	72.0	A3	1.50	0.30
24.4	**455847**	4C24.0-F	95.0	D3	1.31	0.11
27.4	**456014**	4C27.0-F	110.0	D3	1.31	0.11
30.4	**455848**	4C30.0-F	126.0	D3	1.31	0.11
36.4	**455849**	4C36.0-F	162.0	D3	1.31	0.11
44.4	**455850**	4C44.0-F	236.0	D3	1.19	0.41
50.4	**455851**	4C50.0-J	279.0	D3	1.56	0.04

▲ P.D. = O.D.

† **Type 1 = Block Type, 2 = Web, 3 = Arm** - See page PT7–2.

\+ Recommend CX Belt only

DODGE®

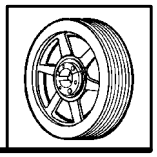

C QD SHEAVES

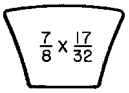

C Belt Profile

5-Groove						F = 5.37
O.D.▲	Part No.	Description	Wt.	Type†	M	K
6.4	**455852**	+5C6.0-SF	13.0	A1	1.94	1.00
7.4	**455853**	5C7.0-SF	26.0	A1	1.25	0.31
7.9	**455854**	5C7.5-SF	28.0	A1	1.88	0.93
8.4	**455855**	5C8.0-E	39.0	A1	1.50	0.30
8.9	**455856**	5C8.5-E	42.0	A1	1.63	0.43
9.4	**455857**	5C9.0-E	43.0	A1	1.63	0.43
9.9	**455858**	5C9.5-E	45.0	A1	1.50	0.30
10.4	**455859**	5C10.0-E	48.0	A1	1.50	0.30
10.9	**455860**	5C10.5-E	50.0	A1	1.50	0.30
11.4	**455861**	5C11.0-E	52.0	A1	2.25	1.05
12.4	**455862**	5C12.0-E	57.0	A1	2.22	1.02
13.4	**455863**	5C13.0-E	61.0	A2	2.00	0.80
14.4	**455864**	5C14.0-E	69.0	A2	2.00	0.80
16.4	**455865**	5C16.0-E	79.0	A3	2.00	0.80
18.4	**455866**	5C18.0-E	74.0	A3	2.38	1.18
20.4	**455867**	5C20.0-F	88.0	D3	1.31	0.11
24.4	**455868**	5C24.0-F	110.0	D3	1.31	0.11
27.4	**456083**	5C27.0-F	128.0	D3	1.31	0.11
30.4	**455869**	5C30.0-F	148.0	D3	1.31	0.11
36.4	**455870**	5C36.0-J	212.0	D3	1.31	0.29
44.4	**455871**	5C44.0-J	274.0	D3	1.31	0.29
50.0	**455872**	5C50.0-J	325.0	D3	1.56	0.04

6-Groove						F = 6.37
O.D.▲	Part No.	Description	Wt.	Type†	M	K
6.4	**455873**	+6C6.0-SF	15.0	A1	1.94	1.00
7.4	**455874**	6C7.0-SF	29.0	A1	1.94	1.00
7.9	**455875**	6C7.5-SF	31.0	A1	1.94	1.18
8.4	**455876**	6C8.0-E	42.0	A1	2.38	1.18
8.9	**455877**	8C8.5-E	46.0	A1	2.38	1.02
9.4	**455878**	6C9.0-F	60.0	A1	2.44	1.02
9.9	**455879**	6C9.5-F	66.0	A1	2.44	1.02
10.4	**455880**	6C10.0-F	64.0	A1	2.44	1.02
10.9	**455881**	6C10.5-F	65.0	A1	2.44	1.02
11.4	**455882**	6C11.0-F	68.0	A1	2.44	1.02
12.4	**455883**	6C12.0-F	73.0	A1	2.44	1.02
13.4	**455884**	6C13.0-F	76.0	A2	2.50	1.08
14.4	**455885**	6C14.0-F	85.0	A2	2.44	1.02
16.4	**455886**	6C16.0-F	96.0	A3	2.44	1.02
18.4	**455887**	6C18.0-F	90.0	A3	2.63	1.20
20.4	**455888**	6C20.0-F	100.0	A3	1.94	0.52
24.4	**455889**	6C24.0-F	126.0	A3	1.94	0.52
27.4	**456084**	6C27.0-J	169.0	D3	0.56	0.04
30.4	**455890**	6C30.0-J	191.0	D3	1.56	0.04
36.4	**455891**	6C36.0-J	239.0	D3	1.56	0.04
44.4	**455892**	6C44.0-J	310.0	D3	1.56	0.04
50.4	**455893**	6C50.0-J	415.0	B3	1.94	0.34

8-Groove						F = 8.37
O.D.▲	Part No.	Description	Wt.	Type†	M	K
7.4	**455894**	8C7.0-SF	32.0	A1	4.00	3.06
8.4	**455895**	8C8.0-E	49.0	A1	3.25	2.05
8.9	**455896**	8C8.5-E	53.0	A1	3.25	2.05
9.4	**455897**	8C9.0-F	68.0	A1	2.50	1.08
9.9	**455898**	8C9.5-F	74.0	A1	2.50	1.08
10.4	**455899**	8C10.0-F	73.0	A1	2.50	1.08
10.9	**455900**	8C10.5-F	74.0	A1	2.50	1.08
11.4	**455901**	8C11.0-F	78.0	A1	3.38	1.95
12.4	**455902**	8C12.0-F	86.0	A1	3.38	1.95
13.4	**455903**	8C13.0-F	93.0	A1	3.38	1.95
14.4	**455904**	8C14.0-F	102.0	A1	3.38	1.95
16.4	**455905**	8C16.0-F	116.0	A3	3.38	1.95
18.4	**455906**	8C18.0-F	133.0	A3	3.63	2.20
20.4	**455907**	8C20.0-J	147.0	D3	1.56	0.04
24.4	**455908**	8C24.0-J	179.0	D3	1.56	0.04
27.4	**456085**	8C27.0-J	205.0	D3	1.56	0.04
30.4	**455909**	8C30.0-J	233.0	D3	1.56	0.04
36.4	**455910**	8C36.0-M	339.0	A3	1.94	0.20
44.4	**455911**	8C44.0-M	428.0	A3	1.94	0.20
50.4	**455912**	8C50.0-M	502.0	A3	1.94	0.20

10-Groove						F = 10.37
O.D.▲	Part No.	Description	Wt.	Type†	M	K
8.4	**455913**	10C8.0-E	76.0	A1	3.25	2.05
8.9	**455914**	10C8.5-E	80.0	A1	3.25	2.05
9.4	**455915**	10C9.0-J	84.0	A1	3.56	1.96
9.9	**455916**	10C9.5-J	91.0	A1	3.56	1.96
10.4	**455917**	10C10.0-J	99.0	A1	3.56	1.96
10.9	**455918**	10C10.5-J	106.0	A1	3.56	1.96
11.4	**455919**	10C11.0-J	115.0	A1	3.56	1.96
12.4	**455920**	10C12.0-J	114.0	A1	3.56	1.96
13.4	**456061**	10C13.0-J	119.0	A1	3.56	1.96
14.4	**455921**	10C14.0-J	128.0	A1	3.63	2.02
16.4	**455922**	10C16.0-J	147.0	A1	3.56	1.96
18.4	**455923**	10C18.0-J	156.0	A3	3.56	1.96
20.4	**455924**	10C20.0-J	171.0	A3	3.56	1.96
24.4	**455925**	10C24.0-M	257.0	A3	1.94	0.20
30.4	**455926**	10C30.0-M	321.0	A3	1.94	0.20
36.4	**455927**	10C36.0-M	393.0	A3	1.94	0.20
44.4	**455928**	10C44.0-M	500.0	A3	1.94	0.20
50.4	**455929**	10C50.0-M	589.0	A3	1.94	0.20

12-Groove						F=12.37
O.D.▲	Part No.	Description	Wt.	Type†	M	K
9.4	**455930**	12C9.0-J	92.0	A1	4.06	2.46
9.9	**455931**	12C9.5-J	100.0	A1	4.06	2.46
10.4	**455932**	12C10.0-J	108.0	A1	4.06	2.46
10.9	**455933**	12C10.5-J	115.0	A1	4.06	2.46
11.4	**455934**	12C11.0-J	125.0	A1	4.06	2.46
12.4	**455935**	12C12.0-J	127.0	A1	4.06	2.46
13.4	**455936**	12C13.0-J	135.0	A1	4.06	2.46
14.4	**455937**	12C14.0-J	145.0	A1	4.06	2.46
16.4	**455938**	12C16.0-J	165.0	A2	4.06	2.46
18.4	**455939**	12C18.0-J	198.0	A3	4.06	2.46
20.4	**455940**	12C20.0-M	277.0	A3	1.94	0.20
24.4	**455941**	12C24.0-M	287.0	A3	1.94	0.20
30.4	**455942**	12C30.0-M	362.0	A3	1.94	0.20
36.4	**455943**	12C36.0-M	446.0	A3	1.94	0.20
44.4	**455944**	12C44.0-M	572.0	A3	1.94	0.20
50.4	**455945**	12C50.0-M	676.0	A3	1.94	0.20

▲ P.D. = O.D.

† **Type 1 = Block Type, 2 = Web, 3 = Arm** - See page PT7-2.

\+ Recommend CX Belt only