S-2000 Roller Bearings

DODGE®



BALDOR®



Longer Bearing Life by Design...

These unit-housed, double-row spherical, mounted bearings have high ratings and long L10 lives. A variety of housing styles and sealing options allow for easy application on material and air handling machinery. Industry standard dimensions make the products interchangeable with many brands.

The S-2000 bearing offers a wide variety of compact, cast iron or cast steel housings from which to choose. All S-2000 bearings include:

- Standard Trident seals
- Labyrinth seal option
- Easy installation features
- Extended life bearings
- Single snap ring movable for expansion



S-2000-E



S-2000

DODGE®

All DODGE bearings are manufactured under a quality system registered to ISO 9002 by Underwriters Laboratories.

S-2000 Offers Replaceable Inserts and Multiple Sealing Options

INSTALLATION SAVINGS…

- Factory lubricated and sealed
- Ready to slip onto the shaft
- 65° Springlok collar mount for increased holding power versus 90° or 120°
- Field convertible from non-expansion to expansion and expansion to non-expansion
- Elongated bolt holes to facilitate mounting

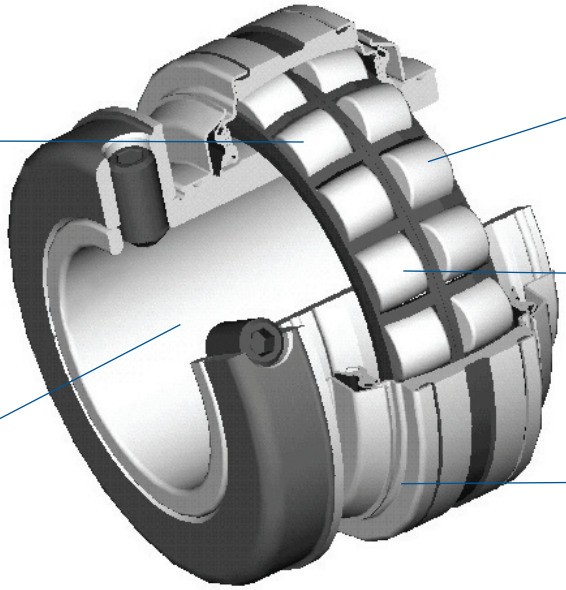

S-2000 BEARINGS OFFER PATENTED SEAL OPTIONS TO MAXIMIZE BEARING LIFE…

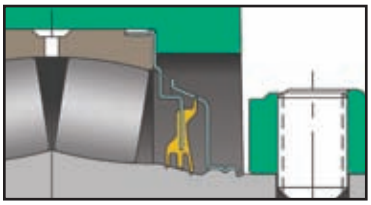

TRIDENT® Seals – for dirty enviroments, low to medium speed and normal ambient conditions

- Triple lip rubbing seal for maximum sealing protection
- Nitrile seal material for low coefficient of friction
- Seal land maintains full seal contact pressure when misaligned
- Corrosion resistent flingers

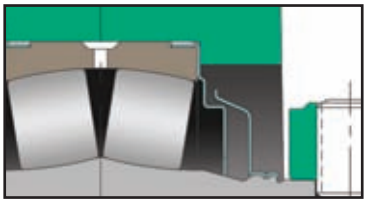

Labyrinth Seals – for high speeds and higher ambient conditions

- Steel seal carriers
- Corrosion resistant flingers
- Close proximity of seals to bearing ensures grease purge of contaminents

	Trident Seal	Labyrinth Seal
Dusty/Dirty	++	+
Wet/Moisture Laden	+	–
High Pressure Washdown	+	–
High Temperature	–	+
High Speed	–	++
Chemical	•	•
Misalignment	+	+

++ Very Good
+ Good
– Not Recommended
• Questionable (depends on condition; Consult DODGE Engineering)

S-2000 Housing Configurations

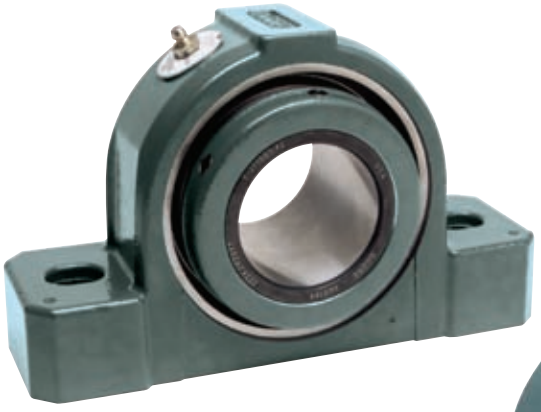

Pillow Blocks
Two-Bolt – 1 3/8" – 3 15/16"
Four-Bolt – 1 15/16" – 4 15/16"

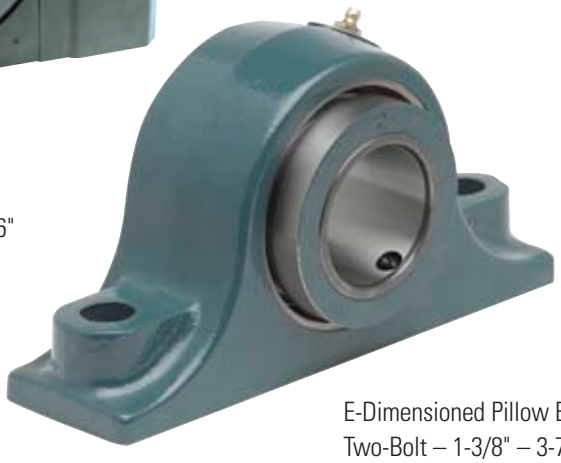

E-Dimensioned Pillow Blocks
Two-Bolt – 1-3/8" – 3-7/16"
Four-Bolt – 2-7/16" – 4-15/16"



Take-up Bearings
Wide Slot – 1 3/8" – 4 15/16"
TPHU – 1 15/16" – 4 15/16"



S-2000





S-2000 E

Flanged Bearings
Four-Bolt – 1 3/8" – 3 15/16"
Piloted – 1 3/8"– 4 15/16"
Square flanges and piloted flanges
also available with Type E dimensions

Available in cast iron or cast steel

The Best Bearings Come From the Best Plant

Our DODGE® Type E, S-2000 and S-2000-E, and IMPERIAL® and IMPERIAL-E bearings are the best. Manufactured at our Marion, NC, plant—one of IndustryWeek's Top 10 Best Plants for 2004—they represent the best in roller bearing technology and innovation.

When you want the best bearings, look to DODGE and our Best Plant in Marion, NC. Together, they are your best source for performance-proven solutions.



End Covers are Available for Added Safety and Sealing

- Powder coated
- Safety yellow
- Shaft end: closed
- Shaft through: open with lip seal







World Headquarters
P.O. Box 2400, Fort Smith, AR 72902-2400 U.S.A., Ph: (1) 479.646.4711, Fax (1) 479.648.5792, International Fax (1) 479.648.5895

Baldor - Dodge
6040 Ponders Court, Greenville, SC 29615-4617 U.S.A., Ph: (1) 864.297.4800, Fax: (1) 864.281.2433

www.baldor.com

© Baldor Electric Company
All Rights Reserved. Printed in USA.

BR3007
10/09 TCP 25,000