TAF

BALDOR • DODGE®

BEARINGS

The Dodge® TAF mounted tapered roller bearing is the cost-saving alternative to the standard SAF pillow block.

Increases life with better sealing and misalignment capability versus SAF.

- Bearing comes pre-greased from the factory
- XTS seal
- 5° misalignment

Compare DODGE TAF Bearing Against Standard SAF Pillow Blocks

- 1-7/16" through 7" two and four-bolt pillow blocks
- XTS seal
- E-Tect available for harsh duty applications
- 4° vs. 1/2° on SAF
- Dodge manufactured tapered rolling elements

Interchangeable With
SAF Key Dimensions

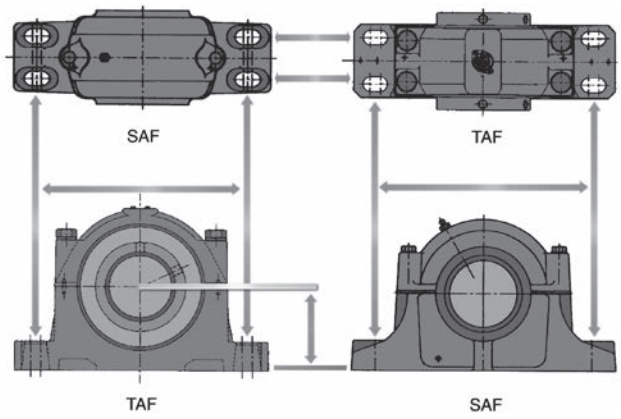



TAF Tapered Roller Bearings

Dodge TAF bearings are a proven, cost-saving alternative to SAF spherical bearings with up to 7" bores. TAF bearings offer a decreased mounting time.

TAF

Saves Installation Time, Reduces Lubrication Costs

SIZE	TAF (in man min.)	SAF (in man min.)	TIME SAVED WITH TAF (in man min.)
2-15/16"	13	73	60
4-15/16"	14	100	86

** Installation of two bearings, all tools and lube available, trained personnel, clean work area, and organized components*

Requires Less Grease

BORE SIZE	TAF GREASE CHARGE*	SAF GREASE CHARGE*	GREASE SAVED
2-7/16	2 oz	9 oz	78%
3-7/16	5 oz	21 oz	76%
4-7/16	10 oz	50 oz	80%
4-15/16	15 oz	56 oz	73%

** Initial fill shown*

Increases Thrust Load Capacity

THRUST CAPACITY	TAF	SAF
1-7/16	2100	698
2-7/16	3454	1568
3-7/16	5181	3102
4-7/16	6908	5610
4-15/16	6908	6419
6-15/16	12282	11786

BALDOR®
A MEMBER OF THE ABB GROUP

Dodge TAF Mounts Six Times Faster Than SAF

- Dual SPRINGLOK® collar setscrew mount system provides gripping force in excess of load capability
- No striking tools or feeler gauge are required
- Optimized setscrew spacing assures holding power

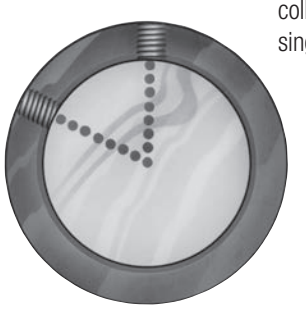

Ships Shaft-Ready, Simplifies Ordering & Handling

- Inner unit fits into outer housing
- Unit is factory sealed, lubricated and adjusted
- Seals, bearing, and locking collars are shipped in a single package



Importance of sealing:

- 40% of mounted bearing failures in the industry involve liquid or solid contamination or lack of adequate lubrication
- Obstructs contaminant entry
- Retains essential lubrication
- Increased life equals decreased downtime

XTS Sealing System

Standard on all Baldor•Dodge Type E-Xtra, TAF, Double Interlock and Type K Bearings

1. Collar-riding seal lip provides the first level of defense against contaminants
2. Trash guard protects inner seals
3. Primary contact seal protects internal components and helps retain grease
4. Contact seal for grease retention and secondary trash guard for increased protection

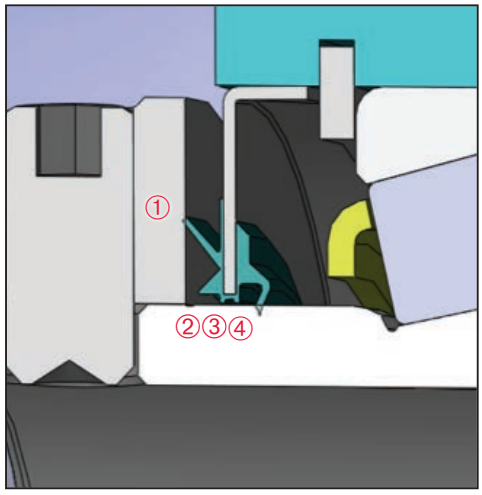

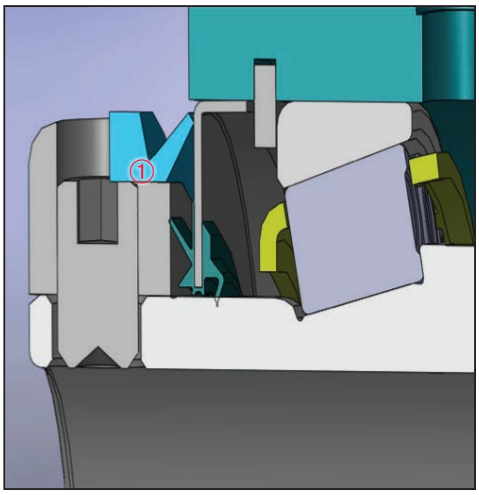

XTS-Plus Sealing System

Add an E-Tect Seal Kit for additional protection

1. Optional E-Tect Seal Kit for Additional Protection

Features Self Aligning Capability

- Precision-fit inner units move like a ball and socket in housing
- Seals ride with the inner unit for complete sealing - even when misaligned

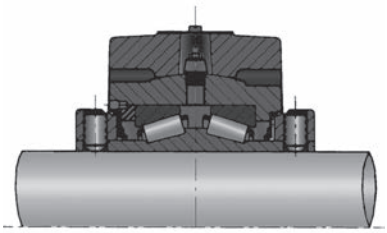

TAF • *Self-alignment provided by spherically machined housing*

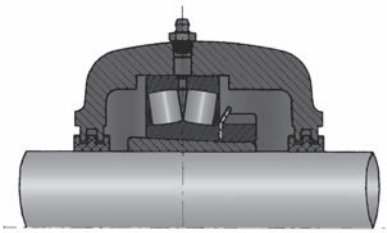

SAF • *Self-alignment provided by insert, limited by seal interference.*

BALDOR®
A MEMBER OF THE ABB GROUP

P.O. Box 2400, Fort Smith, AR 72902-2400 U.S.A., Ph: (1) 479.646.4711, Fax (1) 479.648.5792, International Fax (1) 479.648.5895

Baldor - Dodge
6040 Ponders Court, Greenville, SC 29615-4617 U.S.A., Ph: (1) 864.297.4800, Fax: (1) 864.281.2433

www.baldor.com

© Baldor Electric Company
FL3016

All Rights Reserved. Printed in USA.
9/14 Printshop 500