GRUNDFOS

Submittal Data

PROJECT:		UNIT TAG:		QUANTITY:	
		TYPE OF SERVICE:			
REPRESENTATIVE:		SUBMITTED BY:		DATE:	
ENGINEER:		APPROVED BY:		DATE:	
CONTRACTOR:		ORDER NO.:		DATE:	



Product photo could vary from the actual product

CR 1S-23

Vertical, multistage centrifugal pump with suction and discharge ports on the same level. The pump head and base are in cast iron. All other wetted parts are in stainless steel (EN 1.4301)(AISI 304)

Conditions of Service	
Flow:	
Head:	
Efficiency:	
Liquid:	Water
Temperature:	68 °F
NPSH required:	ft
Viscosity:	
Specific Gravity:	1.000

Pump Data	
Max pressure at stated temperature:	363 psi / 250 °F
Maximum ambient temperature:	140 °F
Approvals:	CURUS,NSF61
Shaft seal:	HQQE
Product number:	96081053

Motor Data	
Rated power - P2:	1.5 HP
Rated voltage:	208-230YY/460Y V
Main frequency:	60 Hz
Enclosure class:	55 Dust/Jetting
Insulation class:	F
Motor protection:	NONE
Motor type:	80CA
Motor_efficiency:	84.9 %

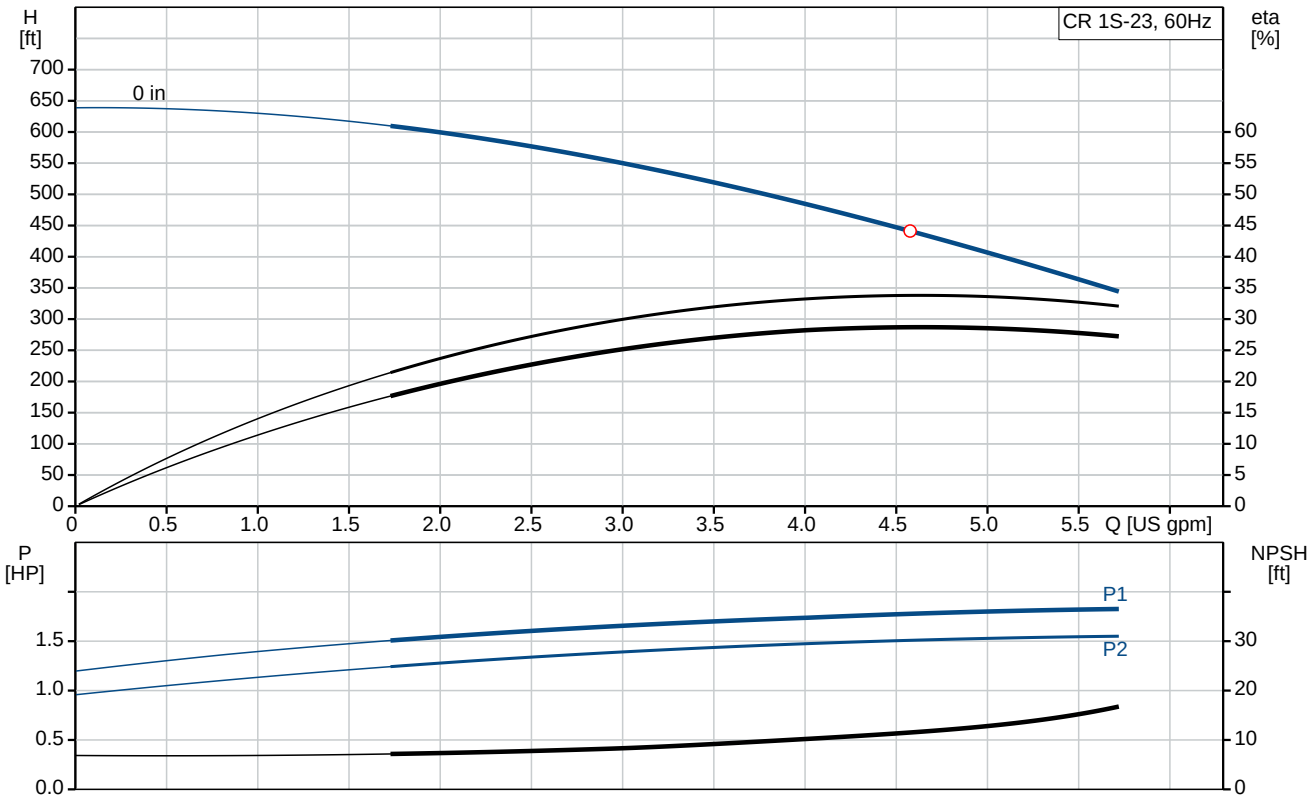

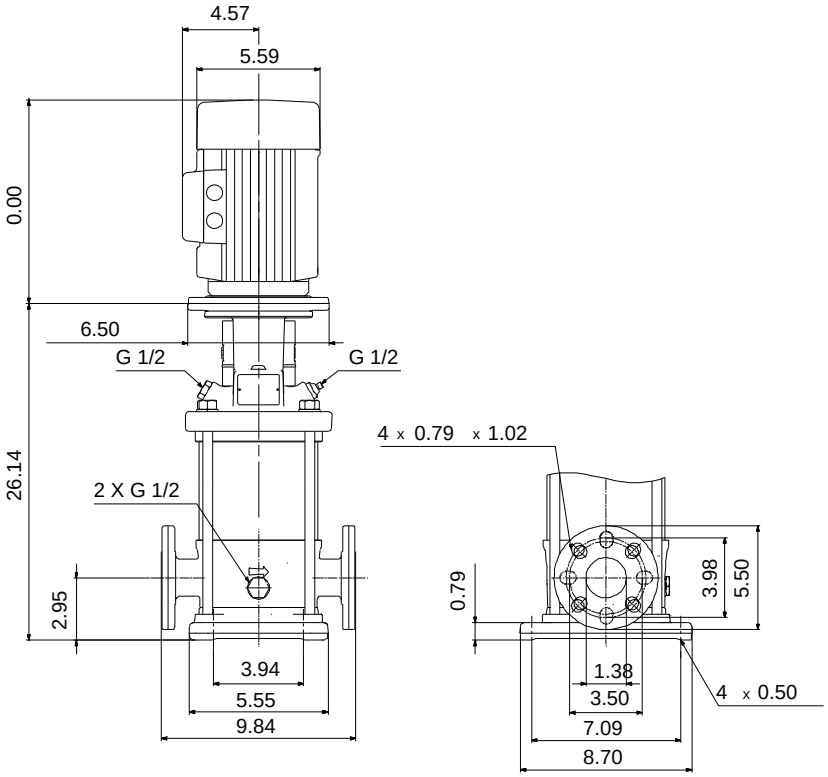

Materials:

Base:	Cast iron EN 1561 EN-GJL-200 ASTM A48-25B
Impeller:	Stainless steel AISI 304 EN 1.4301
Material code:	A
Code for rubber:	E

Company name:
Created by:
Phone:

Date: 2/20/2018

Tender Text



Product No.: 96081053
CR 1S-23 A-FGJ-A-E-HQQE
Vertical, non-self-priming, multistage, in-line, centrifugal pump for installation in pipe systems and mounting on a foundation.

The pump has the following characteristics:
- Impellers and intermediate chambers are made of
- The shaft seal has assembly length according to EN 12756.
- Power transmission is via cast iron split coupling.

The motor is a 3-phase AC motor.

Controls:

Frequency converter:	NONE

Liquid:

Pumped liquid:	Water
Liquid temperature during operation:	68 °F
Density:	62.29 lb/ft³

Technical:

Speed for pump data:	3466 rpm
Pump orientation:	Vertical
Shaft seal arrangement:	Single
Code for shaft seal:	HQQE
Approvals on nameplate:	CURUS,NSF61
Curve tolerance:	ISO9906:2012 3B

Materials:

Base:	Cast iron EN 1561 EN-GJL-200 ASTM A48-25B
Impeller:	Stainless steel EN 1.4301 AISI 304
Bearing material:	SIC

Installation:

Maximum ambient temperature:	140 °F
Max pressure at stated temperature:	363 psi / 250 °F 363 psi / -4 °F
Type of connection:	DIN / ANSI / JIS
Size of inlet connection:	DN 25/32
Size of suction port:	1 1/4 inch
Size of outlet connection:	DN 25/32

Size of outlet port:	1 1/4 inch
Pressure rating:	PN 25
Flange size for motor:	56C
Flange rating inlet:	250 lb

Electrical data:

Motor standard:	NEMA
Motor type:	80CA
IE Efficiency class:	NEMA Premium / IE3 60Hz
Rated power - P2:	1.5 HP
Power (P2) required by pump:	1.5 HP
Main frequency:	60 Hz
Rated voltage:	3 x 208-230YY/460Y V
Service factor:	1,15
Rated current:	4,45-4,3/2,16 A
Starting current:	720 %
Cos phi - power factor:	0,84-0,78
Rated speed:	3440-3480 rpm
IE efficiency:	IE3 84,1%
Motor efficiency at full load:	84.9 %
Motor efficiency at 3/4 load:	81.0 %
Motor efficiency at 1/2 load:	78.5 %
Number of poles:	2
Enclosure class (IEC 34-5):	55 Dust/Jetting
Insulation class (IEC 85):	F

Others:

Net weight:	75 lb
Gross weight:	89.5 lb
Shipping volume:	8.26 ft^3

GRUNDFOS

Company name:
Created by:
Phone:

Date: 2/20/2018

Position	Count	Description
	1	**CR 1S-23 A-FGJ-A-E-HQQE**



Product No.: 96081053
Vertical, non-self-priming, multistage, in-line, centrifugal pump for installation in pipe systems and mounting on a foundation.

The pump has the following characteristics:
- Impellers and intermediate chambers are made of
- The shaft seal has assembly length according to EN 12756.
- Power transmission is via cast iron split coupling.

The motor is a 3-phase AC motor.

Controls:

Frequency converter:	NONE

Liquid:

Pumped liquid:	Water
Liquid temperature during operation:	68 °F
Density:	62.29 lb/ft³

Technical:

Speed for pump data:	3466 rpm
Pump orientation:	Vertical
Shaft seal arrangement:	Single
Code for shaft seal:	HQQE
Approvals on nameplate:	CURUS,NSF61
Curve tolerance:	ISO9906:2012 3B

Materials:

Base:	Cast iron EN 1561 EN-GJL-200 ASTM A48-25B
Impeller:	Stainless steel EN 1.4301 AISI 304
Bearing material:	SIC

Installation:

Maximum ambient temperature:	140 °F
Max pressure at stated temperature:	363 psi / 250 °F 363 psi / -4 °F
Type of connection:	DIN / ANSI / JIS
Size of inlet connection:	DN 25/32
Size of suction port:	1 1/4 inch
Size of outlet connection:	DN 25/32
Size of outlet port:	1 1/4 inch

Position	Count	Description	
		Pressure rating:	PN 25
		Flange size for motor:	56C
		Flange rating inlet:	250 lb
		Electrical data:	
		Motor standard:	NEMA
		Motor type:	80CA
		IE Efficiency class:	NEMA Premium / IE3 60Hz
		Rated power - P2:	1.5 HP
		Power (P2) required by pump:	1.5 HP
		Main frequency:	60 Hz
		Rated voltage:	3 x 208-230YY/460Y V
		Service factor:	1,15
		Rated current:	4,45-4,3/2,16 A
		Starting current:	720 %
		Cos phi - power factor:	0,84-0,78
		Rated speed:	3440-3480 rpm
		IE efficiency:	IE3 84,1%
		Motor efficiency at full load:	84.9 %
		Motor efficiency at 3/4 load:	81.0 %
		Motor efficiency at 1/2 load:	78.5 %
		Number of poles:	2
		Enclosure class (IEC 34-5):	55 Dust/Jetting
		Insulation class (IEC 85):	F
		Others:	
		Net weight:	75 lb
		Gross weight:	89.5 lb
		Shipping volume:	8.26 ft^3

Company name:
Created by:
Phone:

Date: 2/20/2018

96081053 CR 1S-23 60 Hz

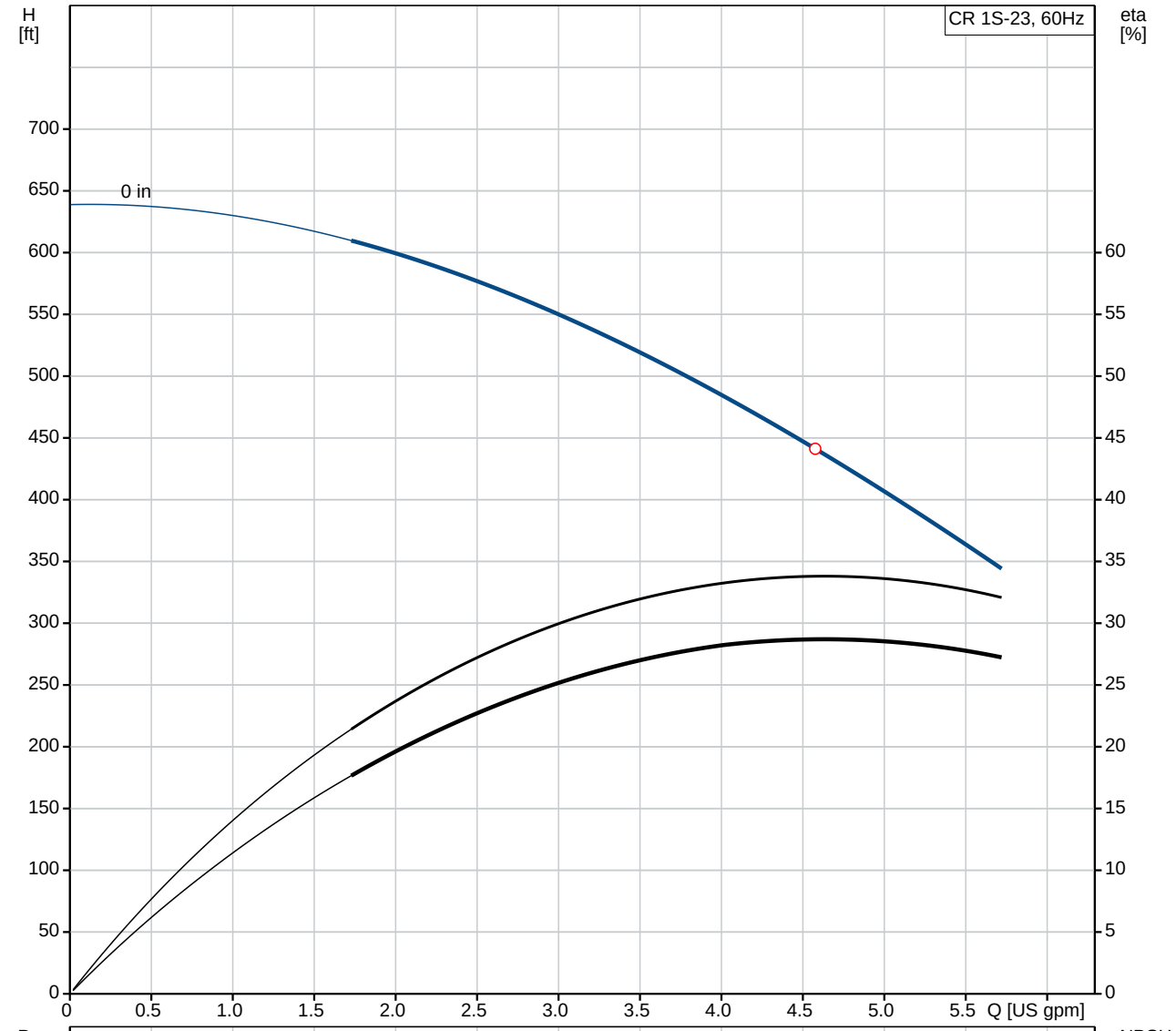

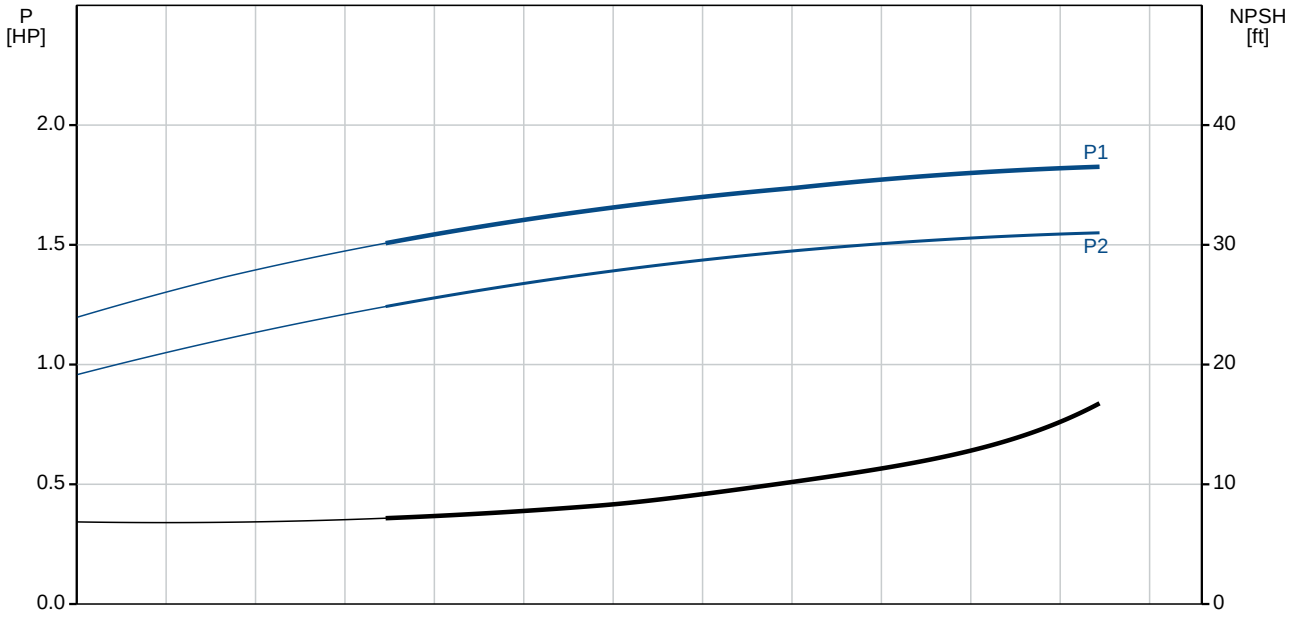

Company name:
Created by:
Phone:

Date: 2/20/2018

Description	Value
General information:	
Product name:	CR 1S-23 A-FGJ-A-E-HQQE
Product No.:	96081053
EAN:	5700395155099
Technical:	
Speed for pump data:	3466 rpm
Stages:	23
Impellers:	23
Low NPSH:	N
Pump orientation:	Vertical
Shaft seal arrangement:	Single
Code for shaft seal:	HQQE
Approvals on nameplate:	CURUS,NSF61
Curve tolerance:	ISO9906:2012 3B
Pump version:	A
Model:	A
Cooling:	TEFC
Materials:	
Base:	Cast iron
	EN 1561 EN-GJL-200
	ASTM A48-25B
Impeller:	Stainless steel
	EN 1.4301
	AISI 304
Material code:	A
Code for rubber:	E
Bearing material:	SIC
Installation:	
Maximum ambient temperature:	140 °F
Max pressure at stated temperature:	363 psi / 250 °F
	363 psi / -4 °F
Type of connection:	DIN / ANSI / JIS
Connect code:	FGJ
Size of inlet connection:	DN 25/32
Size of suction port:	1 1/4 inch
Size of outlet connection:	DN 25/32
Size of outlet port:	1 1/4 inch
Pressure rating:	PN 25
Flange size for motor:	56C
Flange rating inlet:	250 lb
Liquid:	
Pumped liquid:	Water
Liquid temperature during operation:	68 °F
Density:	62.29 lb/ft³
Electrical data:	
Motor standard:	NEMA
Motor type:	80CA
IE Efficiency class:	NEMA Premium / IE3 60Hz
Rated power - P2:	1.5 HP
Power (P2) required by pump:	1.5 HP
Main frequency:	60 Hz
Rated voltage:	3 x 208-230YY/460Y V

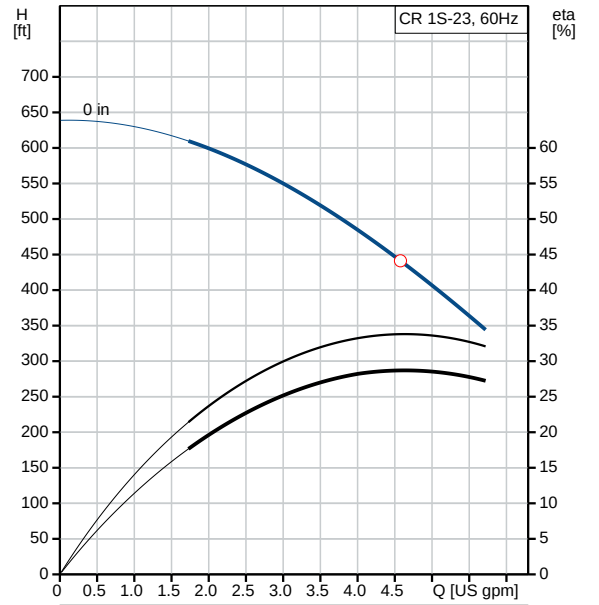

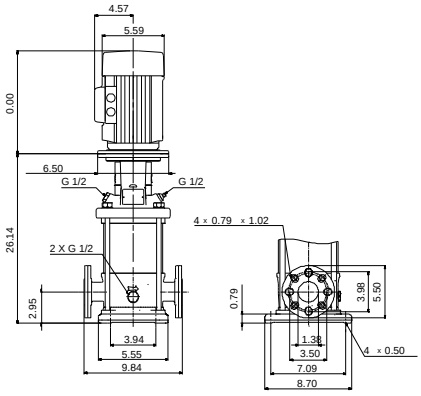

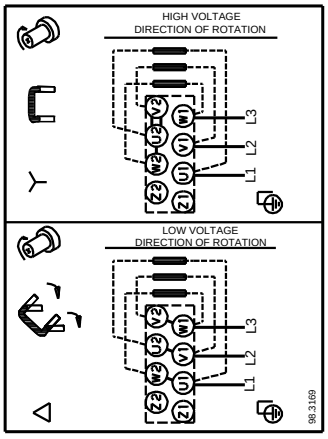

GRUNDFOS

Company name:
Created by:
Phone:

Date: 2/20/2018

Description	Value
Service factor:	1,15
Rated current:	4,45-4,3/2,16 A
Starting current:	720 %
Load current:	5,1-4,95/2,48 A
Cos phi - power factor:	0,84-0,78
Rated speed:	3440-3480 rpm
IE efficiency:	IE3 84,1%
Motor efficiency at full load:	84.9 %
Motor efficiency at 3/4 load:	81.0 %
Motor efficiency at 1/2 load:	78.5 %
Number of poles:	2
Enclosure class (IEC 34-5):	55 Dust/Jetting
Insulation class (IEC 85):	F
Motor protection:	NONE
Motor Number:	98976607
Controls:	
Frequency converter:	NONE
Others:	
Net weight:	75 lb
Gross weight:	89.5 lb
Shipping volume:	8.26 ft³

Company name:
Created by:
Phone:

Date: 2/20/2018

96081053 CR 1S-23 60 Hz

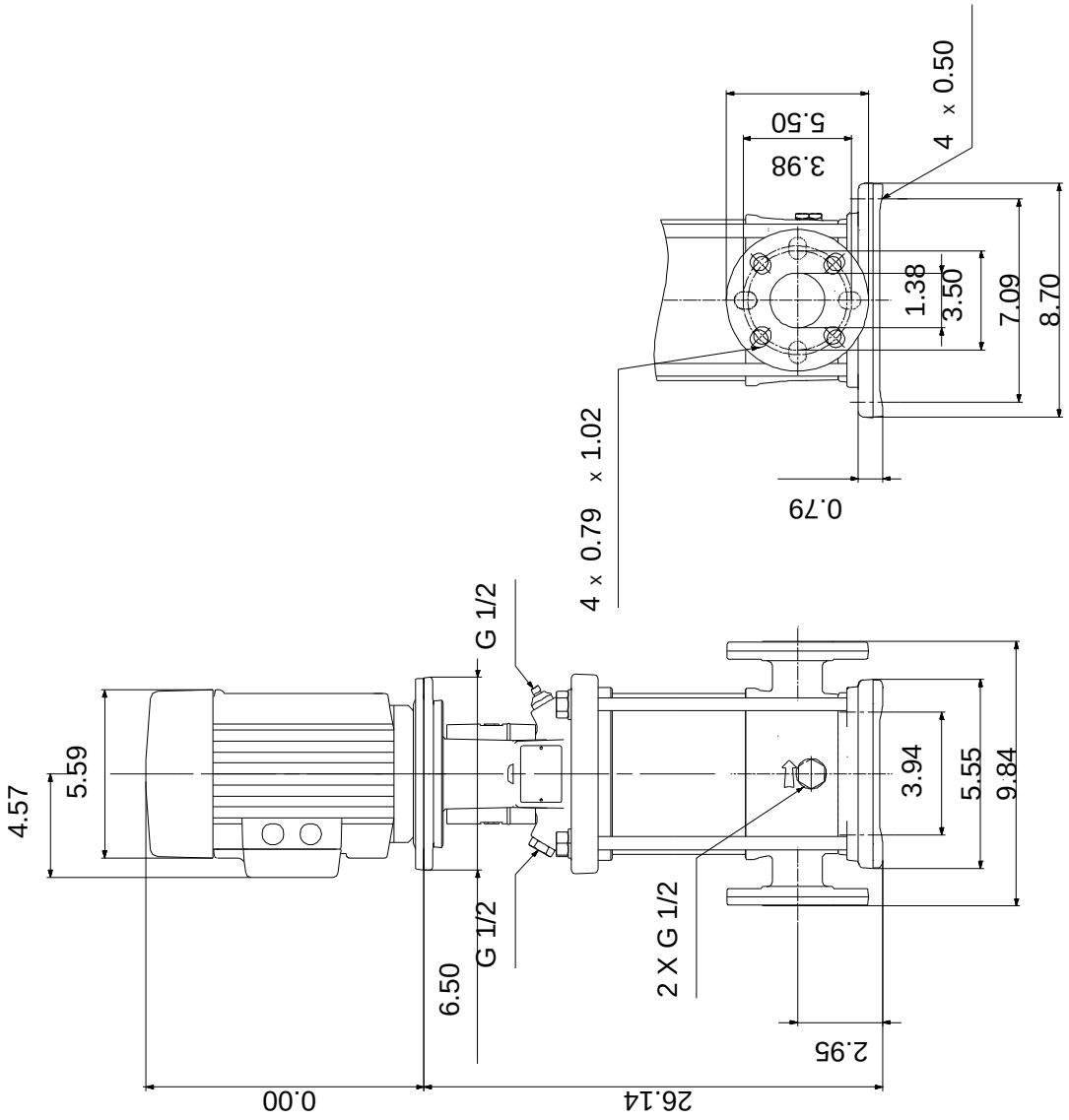

Note! All units are in [mm] unless otherwise stated.
Disclaimer: This simplified dimensional drawing does not show all details.

Company name:
Created by:
Phone:

Date: 2/20/2018

96081053 CR 1S-23 60 Hz

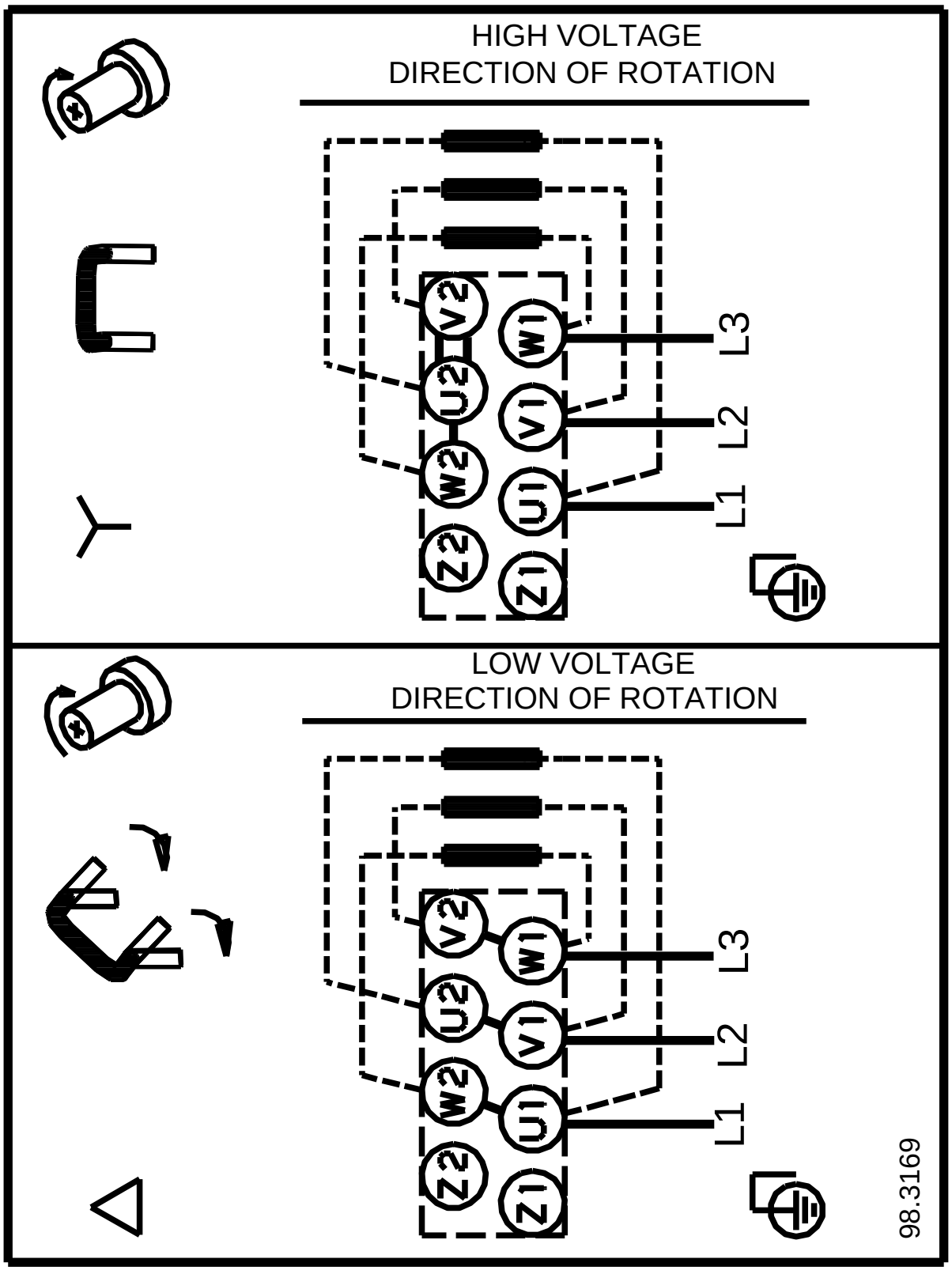

All units are [mm] unless otherwise presented.

Company name:
Created by:
Phone:

Date: 2/20/2018

Order Data:

Product name: CR 1S-23 A-FGJ-A-E-HQQE
Amount: 1
Product No.: 96081053

Total: Price on request

Company name:
Created by:
Phone:

Date: 2/20/2018

Exploded view (tm020210 4100)

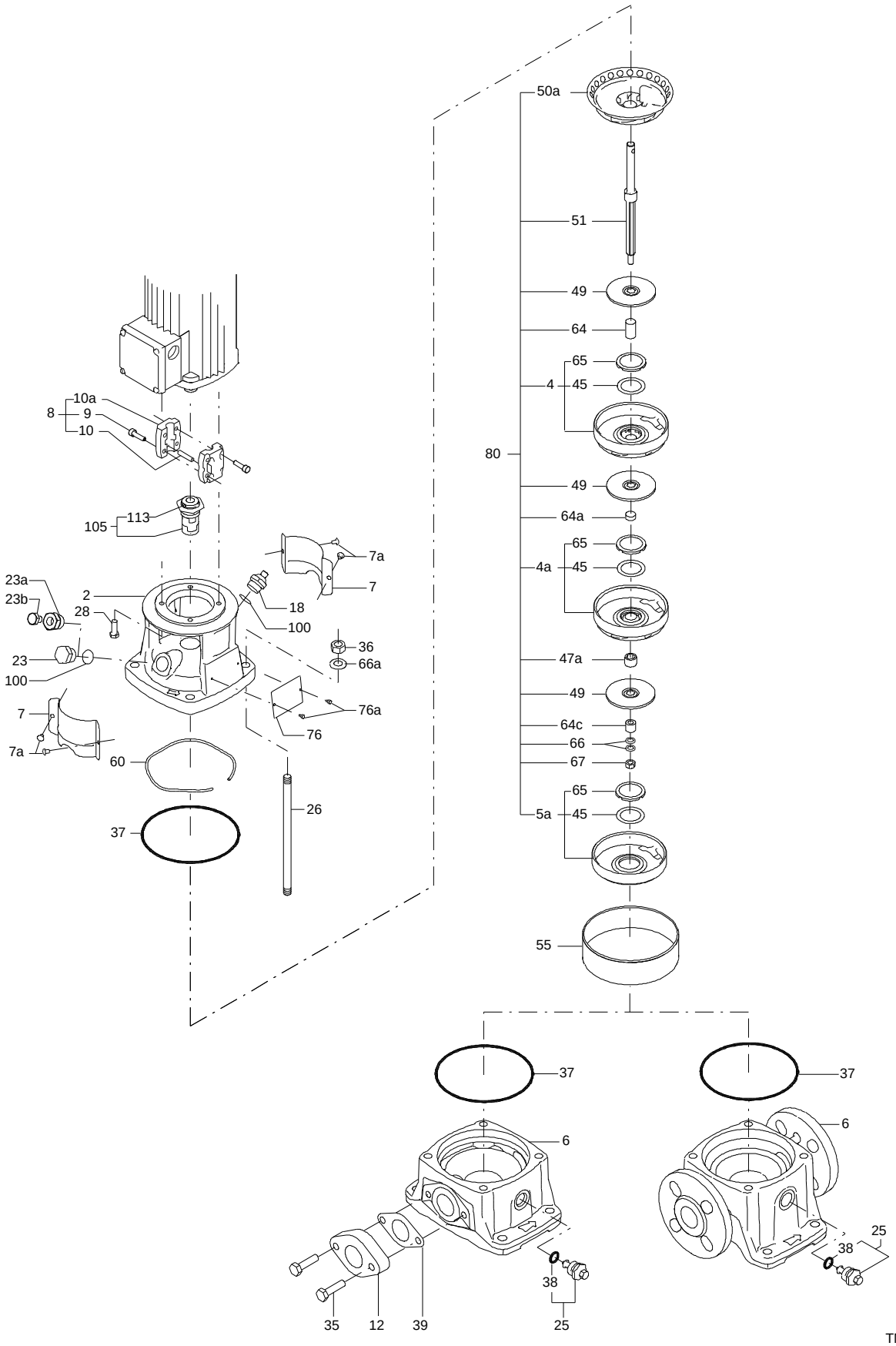

Company name:
Created by:
Phone:

Date: 2/20/2018

Sectional drawing (tm020211 4100)

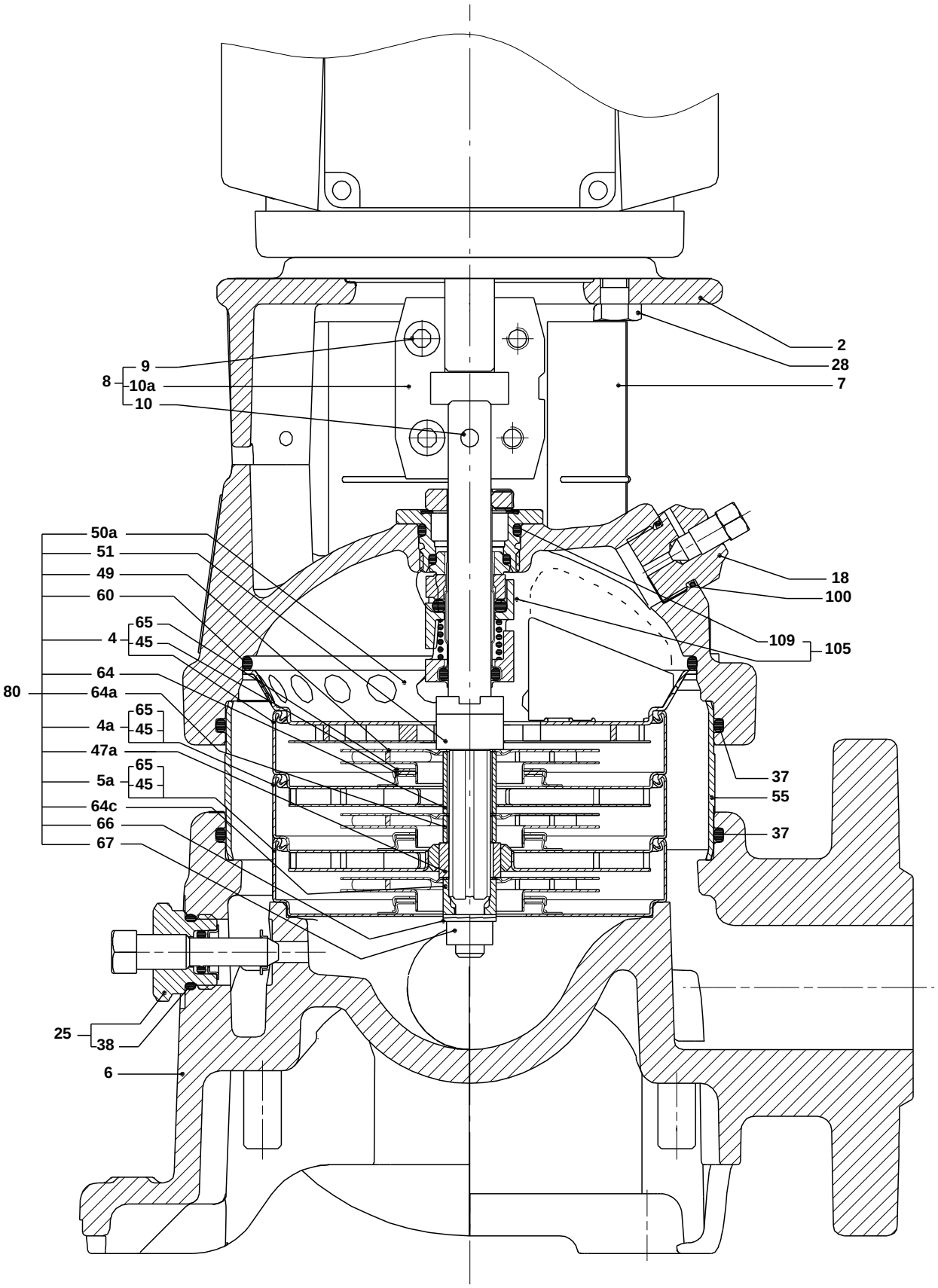

TM020211

GRUNDFOS

Company name:
Created by:
Phone:

Date: 2/20/2018

Parts list CR 1S-23, Prod number 96081053
Valid from 16.9.2016 (1638)

	Position	Description	Annotation	Classification data	Part No.	Count	Unit
		Motor				1	pcs
-		Base cpl.				1	pcs
	6	Base				1	
-		Sealing parts				1	pcs
-	25	Drain plug w/bypass valve				1	
	38	O-ring		Diameter: 16,3			
				Material type: EPDM			
				Thickness: 2,4			
	37	O-ring				2	
	100	O-ring		Diameter: 16,3		2	
				Material type: EPDM			
				Thickness: 2,4			
-	2	Pump head cpl.				1	pcs
	2	Pump head				1	
	7	Coupling guard				2	
	7a	Thread cutting screw				4	
-	18	Air vent screw				1	
		Plug					
		Spindle					
-	25	Drain plug				1	
	23	Pipe plug					
	25	Drain plug					
	28	Hex head cap screw		Length: 25		4	
				Thread: UNC 3/8"			
	60	Formed wire spring				1	
-	8	Coupling cpl.				1	pcs
	9	Hex socket head cap screw		Designation: DIN 912		4	
				Length: 20			
				Thread: M6			
	10	Shaft pin		Diameter: 5		1	
				Length: 26			
	10a	Coupling half				2	
	26	Staybolt		Length: 439		4	pcs
				Thread: M12			
	36a	Washer		Designation: DIN 125 A		4	pcs
				Inner diameter: 13			
				Outer diameter: 24			
				Thickness: 2,5			
	55	Outer sleeve				1	pcs
	66a	Nut		Thread: M12		4	pcs
-	80	Chamber stack				1	pcs
-		Guide vane cpl.				1	
		Plate					
	50a	Guide vane					
	50b	Top plate					
-	4	Chamber cpl.				19	
		Guide vane					
		Plate					
		Retainer					
		Intermediate chamber					
		Vane					
	45	Neck ring					
	65	Retainer					

GRUNDFOS

Company name:
Created by:
Phone:

Date: 2/20/2018

	Position	Description	Annotation	Classification data	Part No.	Count	Unit
-	4a	Chamber w. bearing cpl.				3	
		Guide vane					
		Retainer for bearing					
		Bearing bush					
		Retainer					
		Intermediate chamber					
		Vane					
	45	Neck ring					
	65	Retainer					
-	5a	Chamber cpl.				1	
		Retainer					
		Intermediate chamber					
		Vane					
	45	Neck ring					
	65	Retainer					
	36	Lock nut		Thread: M8		1	
	47a	Bearing ring, rotating				3	
-	49	Impeller cpl.				23	
	49	Impeller					
	51	Shaft, spline, cpl.				1	
	64a	Spacing pipe				19	
	64a	Spacing pipe		Inner diameter: 12,85		3	
				Outer diameter: 15,85			
				Length: 4,50			
	64c	Clamp, splined		Inner diameter: 8,5		1	
				Outer diameter: 15			
	66	Wedge lock washer				1	
-	105	Shaft seal		Material type: HQQE	1		pcs
		O-ring				1	
		O-ring				1	
		Seal driver, upper				1	
		Seal driver, lower				1	
		Spacer ring				1	
		Pipe				1	
		Plug				1	
		Plug				1	
		Compression spring				1	
		Socket set screw				1	
	102	O-ring		Diameter: 22,00		1	
				Material type: EPDM			
				Thickness: 2,75			
	103	Seal ring, stationary				1	
	105	Seal ring, rotating				1	
	107	O-ring				1	
	113	Driver				1	