GRUNDFOS

Submittal Data

PROJECT:		UNIT TAG:		QUANTITY:	
		TYPE OF SERVICE:			
REPRESENTATIVE:		SUBMITTED BY:		DATE:	
ENGINEER:		APPROVED BY:		DATE:	
CONTRACTOR:		ORDER NO.:		DATE:	



Product photo could vary from the actual product

CR 5-18

Vertical, multistage centrifugal pump with suction and discharge ports on the same level. The pump head and base are in cast iron. All other wetted parts are in stainless steel (EN 1.4301)(AISI 304)

Conditions of Service	
Flow:	
Head:	
Efficiency:	
Liquid:	Water
Temperature:	68 °F
NPSH required:	ft
Viscosity:	
Specific Gravity:	1.000

Pump Data	
Max pressure at stated temperature:	363 psi / 194 °F
Shaft seal:	HQQV
Product number:	96084341

Motor Data	
Main frequency:	60 Hz

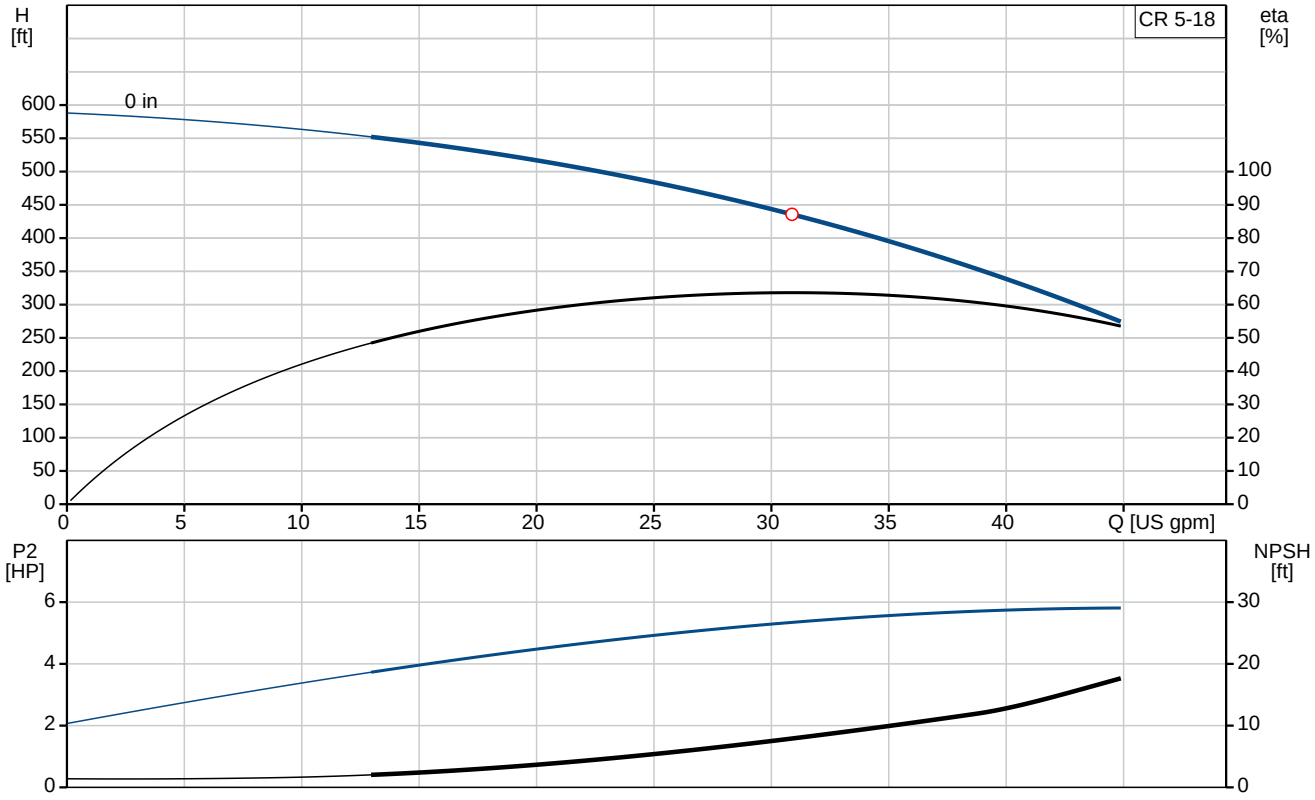

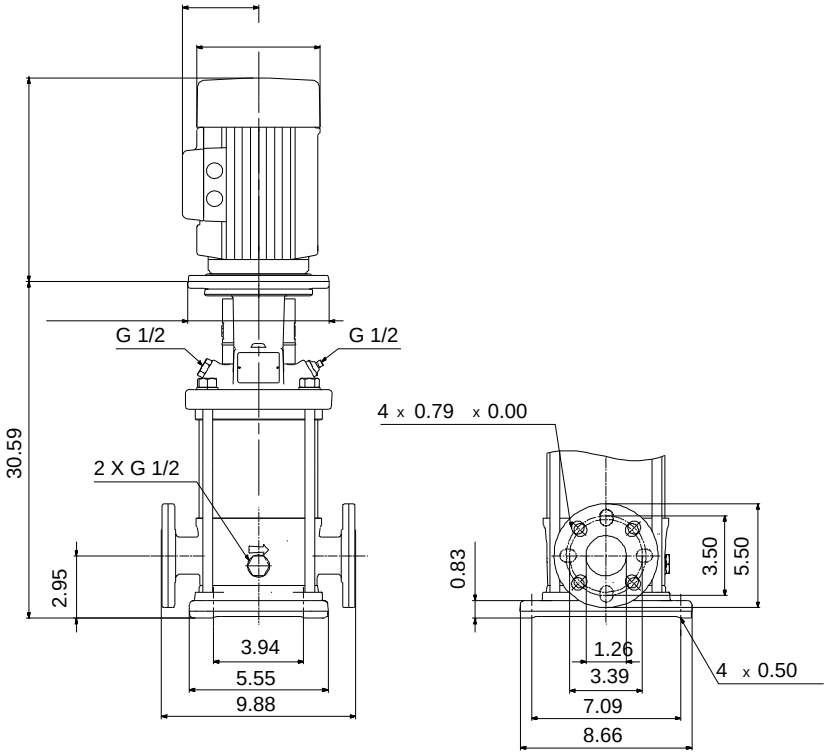

Materials:

Base:	Cast iron EN 1561 EN-GJL-200 ASTM A48-25B
Impeller:	Stainless steel AISI 304 EN 1.4301
Material code:	A
Code for rubber:	V

GRUNDFOS

Company name:
Created by:
Phone:

Date: 2/20/2018

Tender Text



Product photo could vary from the actual product

Product No.: 96084341
CR 5-18 A-FGJ-A-V-HQQV
Vertical, non-self-priming, multistage, in-line, centrifugal pump for installation in pipe systems and mounting on a foundation.

The pump has the following characteristics:
- Impellers and intermediate chambers are made of
- The shaft seal has assembly length according to EN 12756.
- Power transmission is via cast iron split coupling.

Controls:
Frequency converter: NONE

Liquid:
Pumped liquid: Water
Liquid temperature during operation: 68 °F
Density: 62.29 lb/ft³

Technical:
Speed for pump data: 3467 rpm
Pump orientation: Vertical
Shaft seal arrangement: Single
Code for shaft seal: HQQV
Curve tolerance: ISO9906:2012 3B

Materials:
Base: Cast iron
EN 1561 EN-GJL-200
ASTM A48-25B
Impeller: Stainless steel
EN 1.4301
AISI 304
Bearing material: SIC

Installation:
Max pressure at stated temperature: 363 psi / 194 °F
363 psi / -4 °F
Type of connection: DIN / ANSI / JIS
Size of inlet connection: DN 25/32

Size of suction port:	1 1/4 inch
Size of outlet connection:	DN 25/32
Size of outlet port:	1 1/4 inch
Pressure rating:	PN 25
Flange size for motor:	213TC
Flange rating inlet:	250 lb

Electrical data:

Motor standard:	NEMA
Power (P2) required by pump:	7.5 HP

Others:

Net weight:	70.5 lb
Gross weight:	88.4 lb
Shipping volume:	8.26 ft^3

GRUNDFOS

Company name:
Created by:
Phone:

Date: 2/20/2018

Position	Count	Description
	1	**CR 5-18 A-FGJ-A-V-HQQV**



Product photo could vary from the actual product

Product No.: 96084341
Vertical, non-self-priming, multistage, in-line, centrifugal pump for installation in pipe systems and mounting on a foundation.

The pump has the following characteristics:
- Impellers and intermediate chambers are made of
- The shaft seal has assembly length according to EN 12756.
- Power transmission is via cast iron split coupling.

Controls:
Frequency converter: NONE

Liquid:
Pumped liquid: Water
Liquid temperature during operation: 68 °F
Density: 62.29 lb/ft³

Technical:
Speed for pump data: 3467 rpm
Pump orientation: Vertical
Shaft seal arrangement: Single
Code for shaft seal: HQQV
Curve tolerance: ISO9906:2012 3B

Materials:
Base: Cast iron
EN 1561 EN-GJL-200
ASTM A48-25B
Impeller: Stainless steel
EN 1.4301
AISI 304
Bearing material: SIC

Installation:
Max pressure at stated temperature: 363 psi / 194 °F
363 psi / -4 °F
Type of connection: DIN / ANSI / JIS
Size of inlet connection: DN 25/32
Size of suction port: 1 1/4 inch
Size of outlet connection: DN 25/32

GRUNDFOS

Company name:
Created by:
Phone:

Date: 2/20/2018

Position	Count	Description	
		Size of outlet port:	1 1/4 inch
		Pressure rating:	PN 25
		Flange size for motor:	213TC
		Flange rating inlet:	250 lb
		Electrical data:	
		Motor standard:	NEMA
		Power (P2) required by pump:	7.5 HP
		Others:	
		Net weight:	70.5 lb
		Gross weight:	88.4 lb
		Shipping volume:	8.26 ft^3

Company name:
Created by:
Phone:

Date: 2/20/2018

96084341 CR 5-18 60 Hz

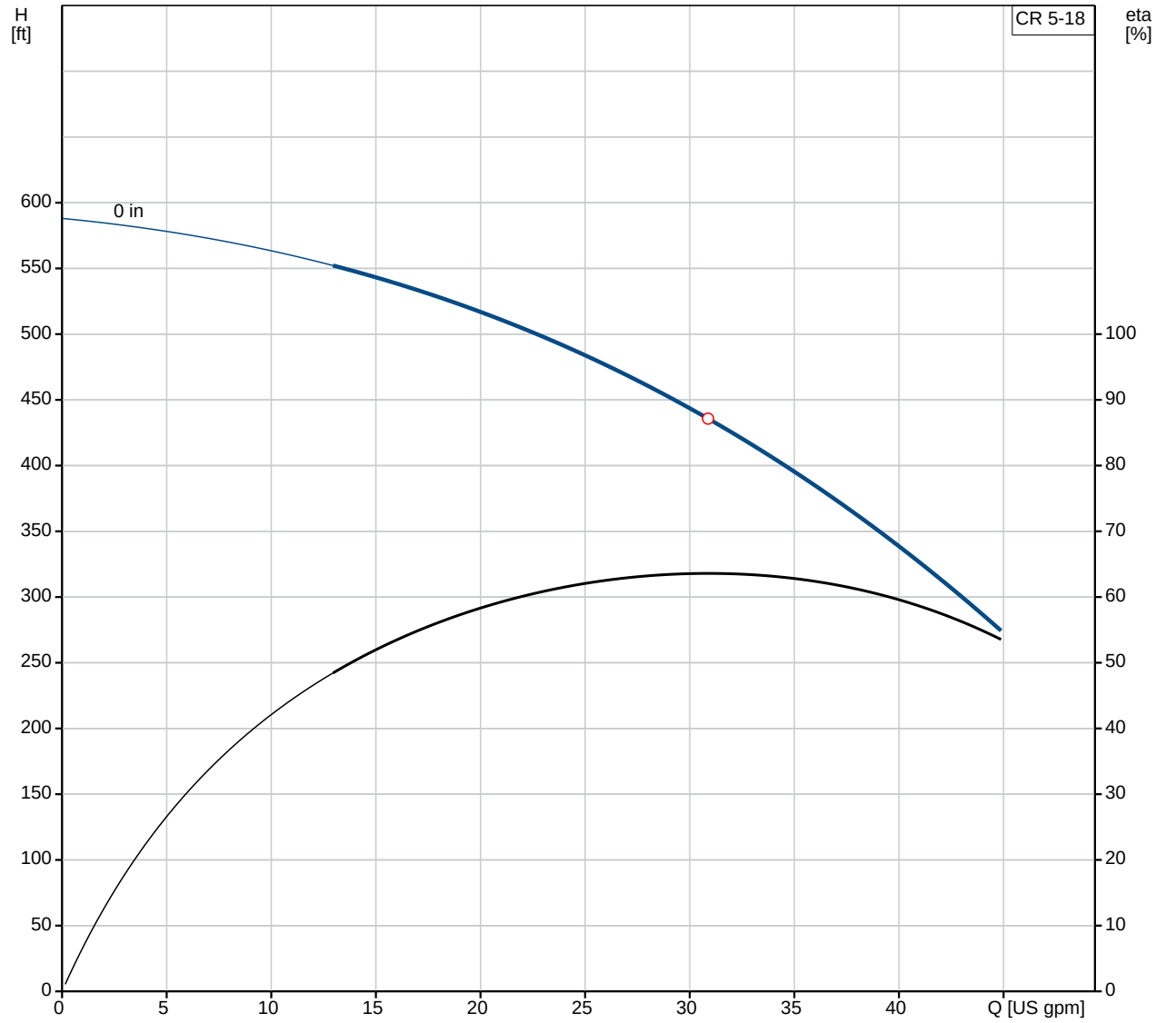

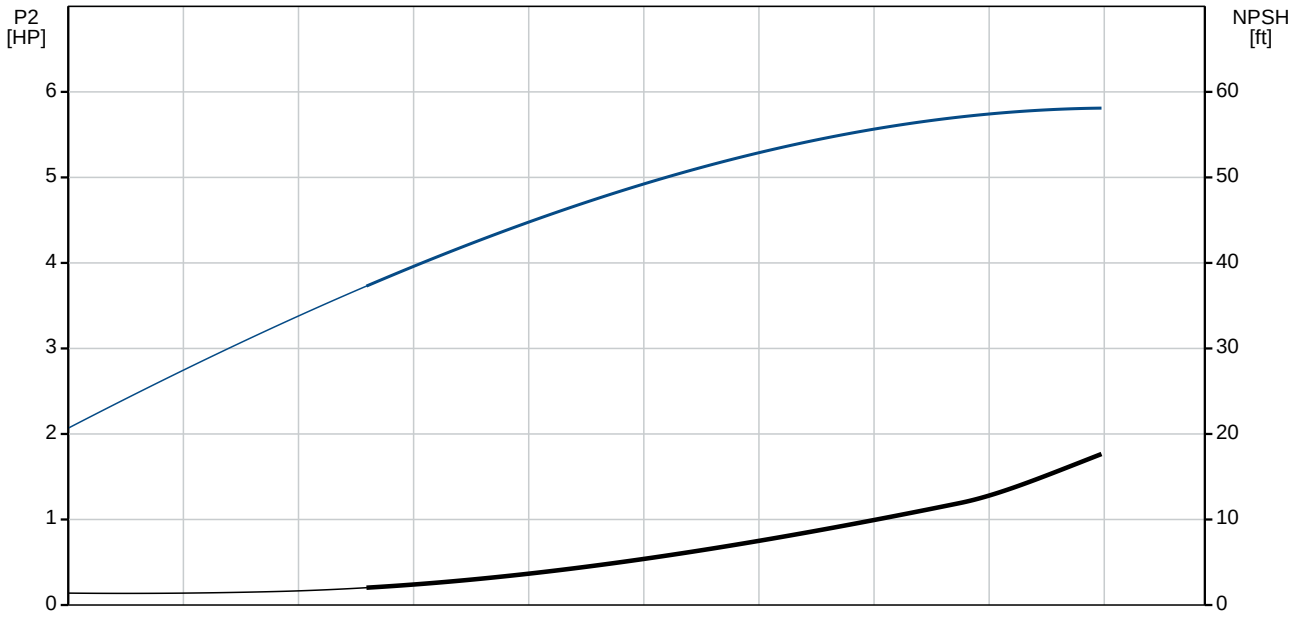

Company name:
Created by:
Phone:

Date: 2/20/2018

Description	Value
General information:	
Product name:	CR 5-18 A-FGJ-A-V-HQQV
Product No.:	96084341
EAN:	5700395191790
Technical:	
Speed for pump data:	3467 rpm
Stages:	18
Impellers:	18
Low NPSH:	N
Pump orientation:	Vertical
Shaft seal arrangement:	Single
Code for shaft seal:	HQQV
Curve tolerance:	ISO9906:2012 3B
Pump version:	A
Model:	A
Materials:	
Base:	Cast iron
	EN 1561 EN-GJL-200
	ASTM A48-25B
Impeller:	Stainless steel
	EN 1.4301
	AISI 304
Material code:	A
Code for rubber:	V
Bearing material:	SIC
Installation:	
Max pressure at stated temperature:	363 psi / 194 °F
	363 psi / -4 °F
Type of connection:	DIN / ANSI / JIS
Connect code:	FGJ
Size of inlet connection:	DN 25/32
Size of suction port:	1 1/4 inch
Size of outlet connection:	DN 25/32
Size of outlet port:	1 1/4 inch
Pressure rating:	PN 25
Flange size for motor:	213TC
Flange rating inlet:	250 lb
Liquid:	
Pumped liquid:	Water
Liquid temperature during operation:	68 °F
Density:	62.29 lb/ft³
Electrical data:	
Motor standard:	NEMA
Power (P2) required by pump:	7.5 HP
Controls:	
Frequency converter:	NONE
Others:	
Net weight:	70.5 lb
Gross weight:	88.4 lb
Shipping volume:	8.26 ft³

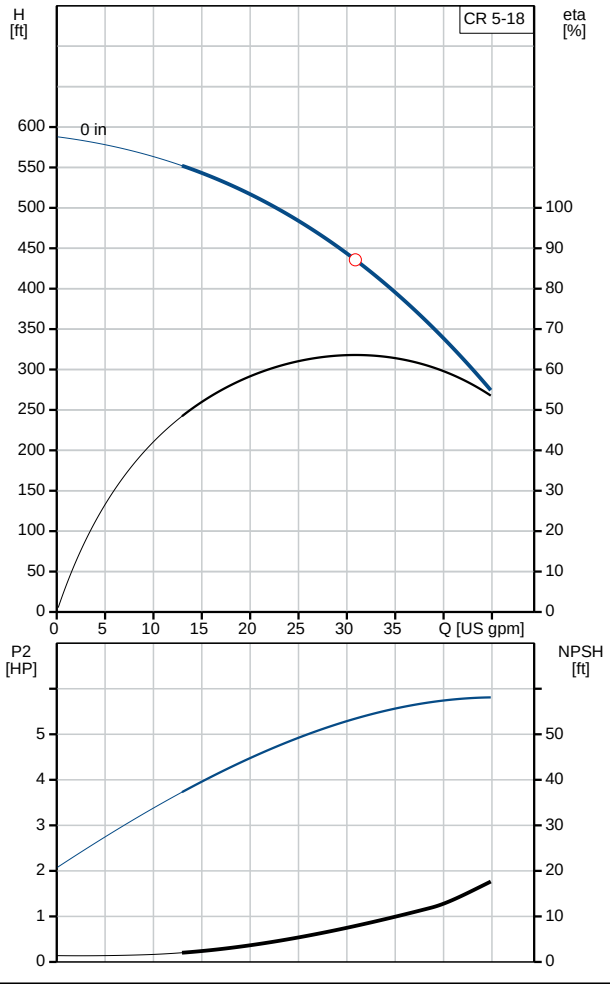

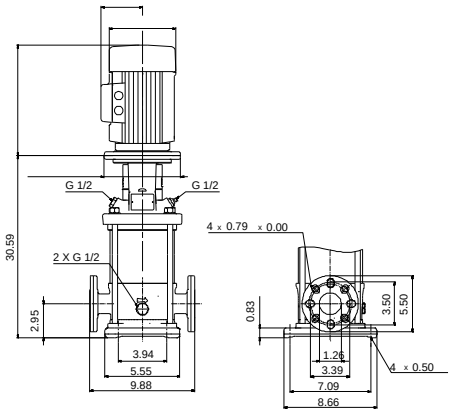

Company name:
Created by:
Phone:

Date: 2/20/2018

96084341 CR 5-18 60 Hz

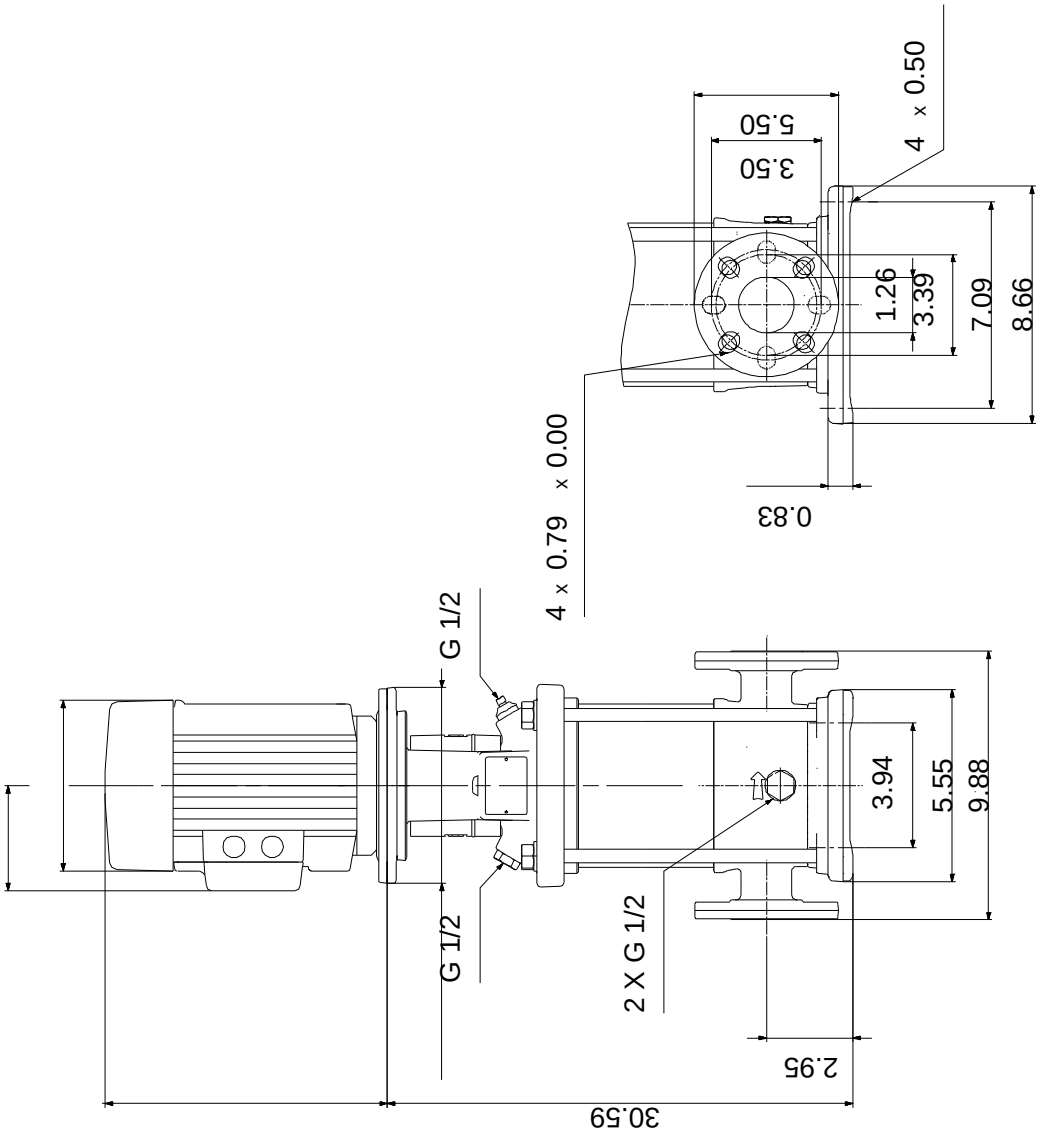

Note! All units are in [mm] unless otherwise stated.
Disclaimer: This simplified dimensional drawing does not show all details.

Company name:
Created by:
Phone:

Date: 2/20/2018

Order Data:

Product name: CR 5-18 A-FGJ-A-V-HQQV
Amount: 1
Product No.: 96084341

Total: Price on request

Company name:
Created by:
Phone:

Date: 2/20/2018

Exploded view (tm020210 4100)

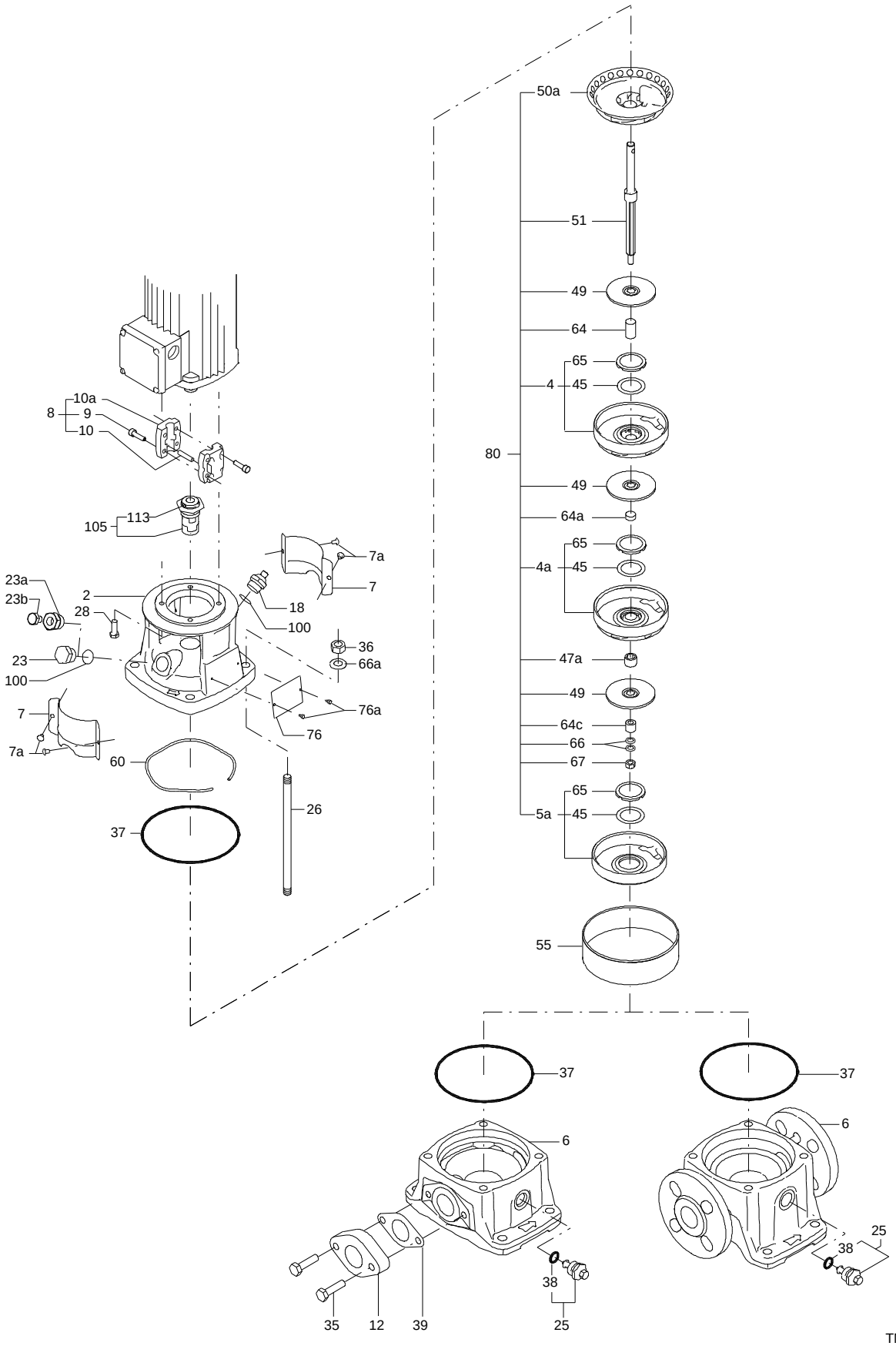

TM020210

Company name:
Created by:
Phone:

Date: 2/20/2018

Sectional drawing (tm020211 4100)

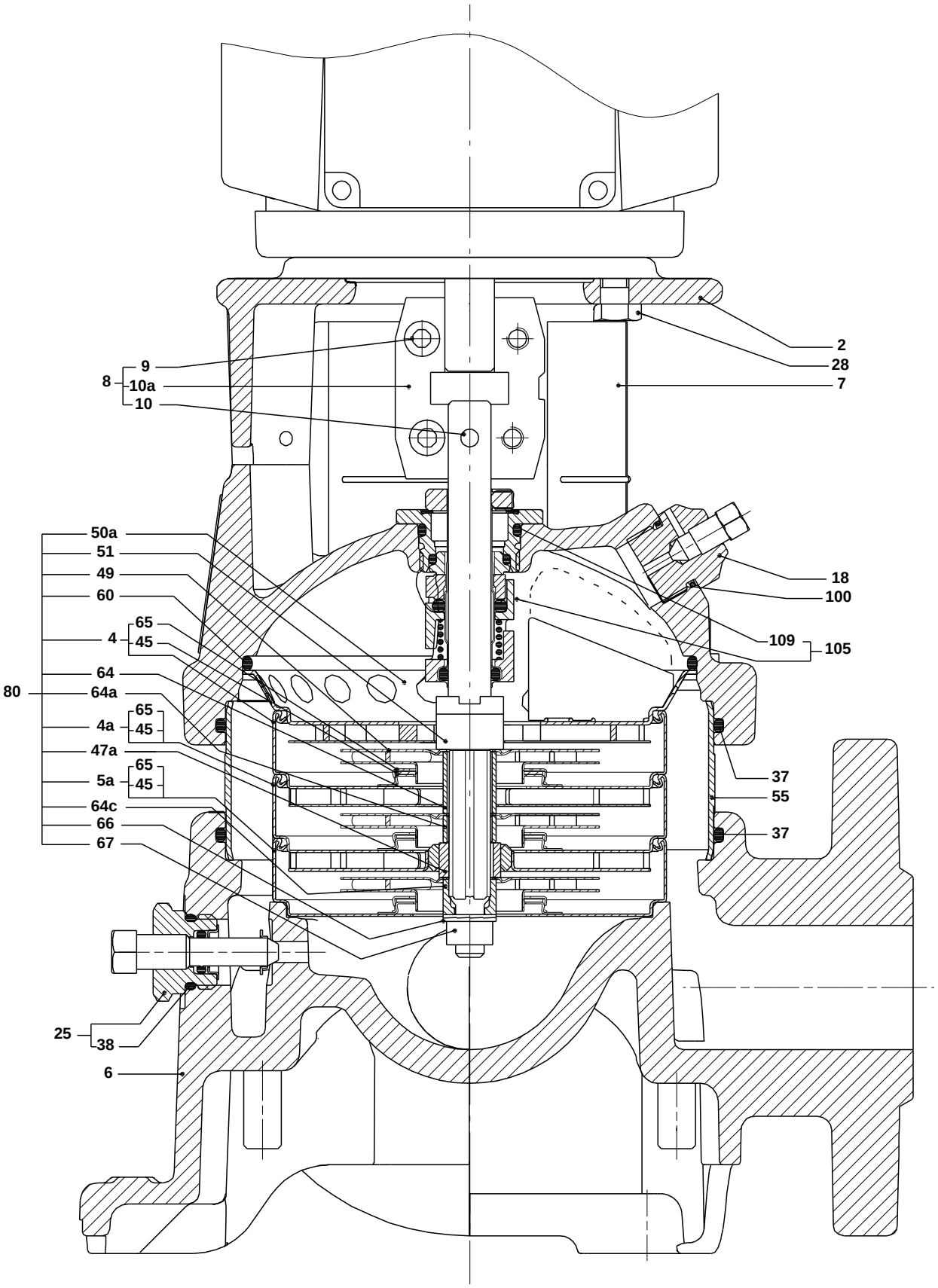

TM020211

GRUNDFOS

Company name:
Created by:
Phone:

Date: 2/20/2018

Parts list CR 5-18, Prod number 96084341
Valid from 1.1.2004 (0401)

	Position	Description	Annotation	Classification data	Part No.	Count	Unit
-		Base cpl.				1	pcs
	6	Base				1	
-		Sealing parts				1	pcs
-	25	Drain plug w/bypass valve				1	
	38	O-ring		Diameter: 16,3			
				Material type: FKM			
				Thickness: 2,4			
	37	O-ring		Diameter: 137,5		2	
				Material type: FKM			
				Thickness: 3,3			
	100	O-ring		Diameter: 16,3		2	
				Material type: FKM			
				Thickness: 2,4			
-	2	Pump head cpl.				1	pcs
	1	Adapter flange				1	
	2	Pump head				1	
	7	Coupling guard				2	
	7a	Thread cutting screw				4	
-	18	Air vent screw				1	
		Plug					
		Spindle					
-	25	Drain plug				1	
	23	Pipe plug					
	25	Drain plug					
	28	Hex head bolt				4	
	60	Formed wire spring				1	
+	8	Coupling				1	pcs
	26	Staybolt		Length: 511		4	pcs
				Thread: M12			
	36a	Washer		Designation: DIN 125 A		4	pcs
				Inner diameter: 13			
				Outer diameter: 24			
				Thickness: 2,5			
	55	Outer sleeve				1	pcs
	66a	Nut		Thread: M12		4	pcs
+	80	Chamber stack				1	pcs
-	105	Shaft seal		Material type: HQQV		1	pcs
		O-ring				1	
		O-ring				1	
		O-ring				1	
		Seal driver, upper				1	
		Seal driver, lower				1	
		Spacer ring				1	
		Pipe				1	
		Plug				1	
		Plug				1	
		Compression spring				1	
		Socket set screw				3	
	103	Seal ring, stationary				1	
	105	Seal ring, rotating				1	
	109	O-ring				1	
	113	Driver				1	