GRUNDFOS

Submittal Data

PROJECT:		UNIT TAG:		QUANTITY:	
		TYPE OF SERVICE:			
REPRESENTATIVE:		SUBMITTED BY:		DATE:	
ENGINEER:		APPROVED BY:		DATE:	
CONTRACTOR:		ORDER NO.:		DATE:	



Product photo could vary from the actual product

CRI 3-4

Vertical, multistage centrifugal pump with suction and discharge ports on the same level. The pump head and base are in cast iron. All wetted parts are in stainless steel (EN 1.4301) (AISI 304)

Conditions of Service	
Flow:	14.3 US gpm
Head:	95.02 ft
Efficiency:	
Liquid:	Water
Temperature:	68 °F
NPSH required:	5.85 ft
Viscosity:	
Specific Gravity:	1.000

Pump Data	
Max pressure at stated temperature:	363 psi / 194 °F
Maximum ambient temperature:	104 °F
Approvals:	CURUS
Shaft seal:	HQQV
Product number:	96083653

Motor Data	
Rated power - P2:	0.75 HP
Rated voltage:	115/208-230 V
Main frequency:	60 Hz
Enclosure class:	54 Dust/Splashing
Insulation class:	B
Motor protection:	NONE
Motor type:	BALDOR

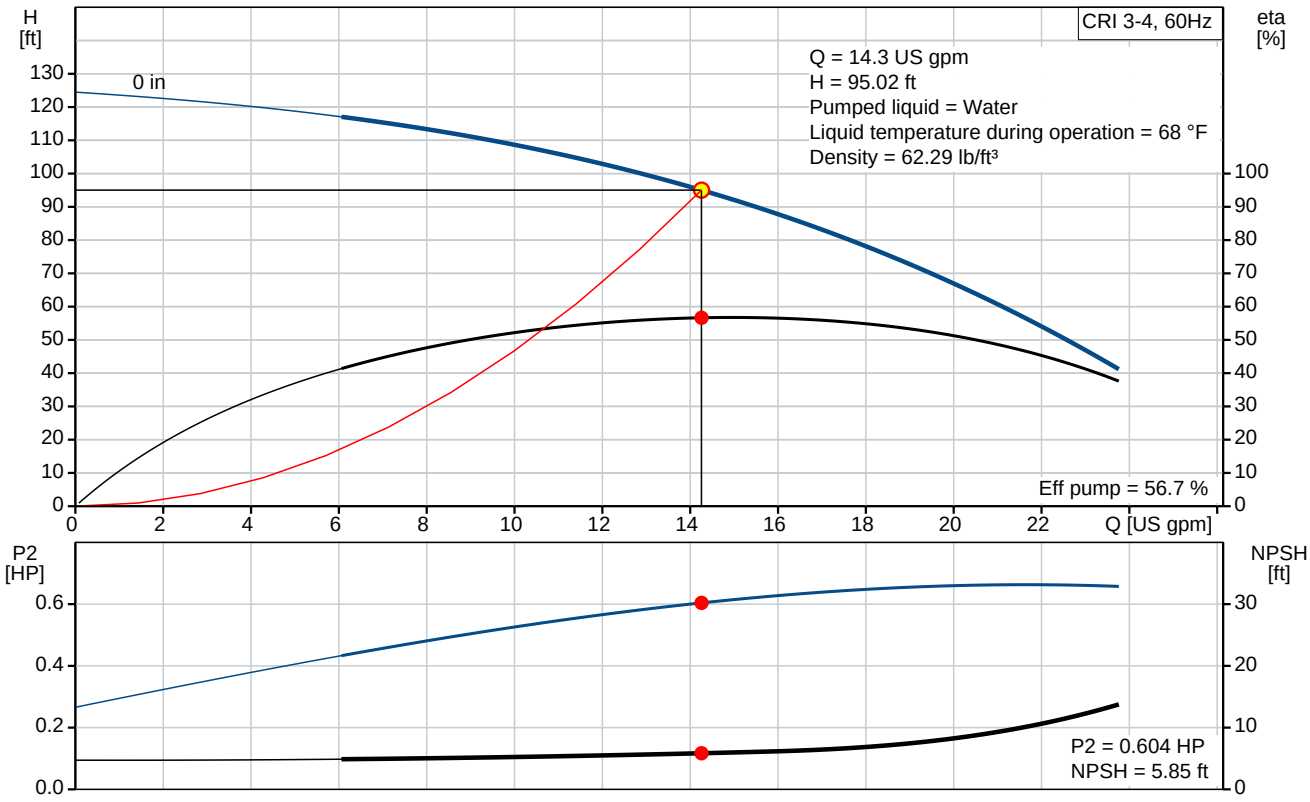

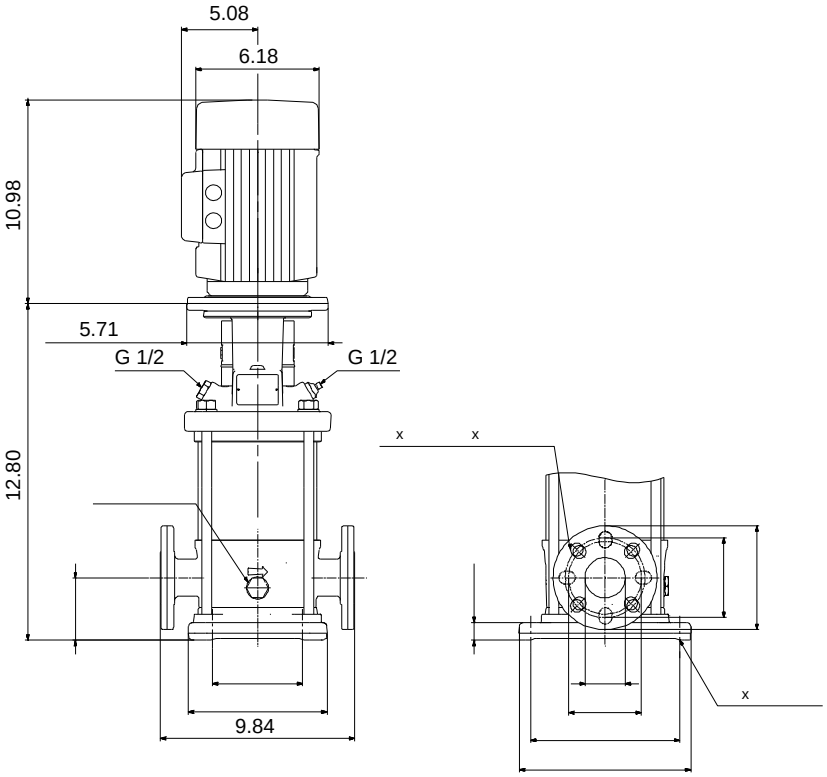

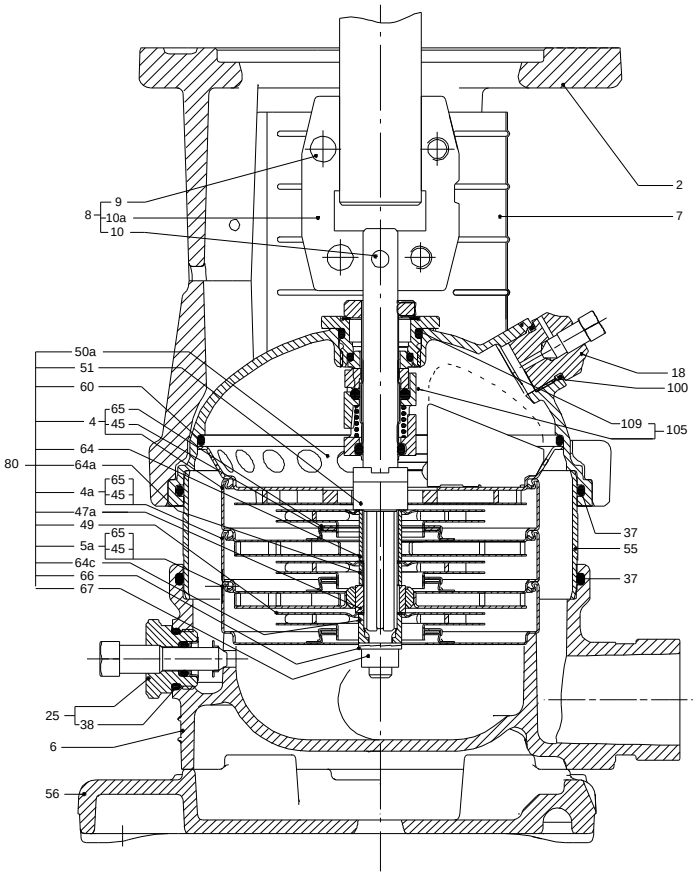

Materials:

Base:	Stainless steel EN 1.4408 AISI 316
Impeller:	Stainless steel AISI 304 EN 1.4301
Material code:	I
Code for rubber:	V

Company name:
Created by:
Phone:

Date: 2/20/2018

Tender Text



Product No.: 96083653
CRI 3-4 A-FGJ-I-V-HQQV
Vertical, non-self-priming, multistage, in-line, centrifugal pump for installation in pipe systems and mounting on a foundation.

The pump has the following characteristics:
- Impellers, intermediate chambers and outer sleeve are made of
- Pump head cover and base are made of
- The shaft seal has assembly length according to EN 12756.
- Power transmission is via cast iron split coupling.

flanges/couplings.

The motor is a 1-phase AC motor.

Controls:

Frequency converter:	NONE

Liquid:

Pumped liquid:	Water
Liquid temperature during operation:	68 °F
Density:	62.29 lb/ft³

Technical:

Speed for pump data:	3464 rpm
Actual calculated flow:	14.3 US gpm
Resulting head of the pump:	95.02 ft
Pump orientation:	Vertical
Shaft seal arrangement:	Single
Code for shaft seal:	HQQV
Approvals on nameplate:	CURUS
Curve tolerance:	ISO9906:2012 3B

Materials:

Base:	Stainless steel EN 1.4408 AISI 316
Impeller:	Stainless steel EN 1.4301 AISI 304
Bearing material:	SIC

Installation:

Maximum ambient temperature:	104 °F
Max pressure at stated temperature:	363 psi / 194 °F

	363 psi / -4 °F
Type of connection:	DIN / ANSI / JIS
Size of inlet connection:	DN 25/32
Size of suction port:	1 1/4 inch
Size of outlet connection:	DN 25/32
Size of outlet port:	1 1/4 inch
Pressure rating:	PN 25
Flange size for motor:	56C
Flange rating inlet:	300 lb

Electrical data:

Motor standard:	NEMA
Motor type:	BALDOR
IE Efficiency class:	NA
Rated power - P2:	0.75 HP
Power (P2) required by pump:	0.75 HP
Main frequency:	60 Hz
Rated voltage:	1 x 115/208-230 V
Service factor:	1.25
Rated current:	9,60/5,00-4,80 A
Rated speed:	3450 rpm
Number of poles:	2
Enclosure class (IEC 34-5):	54 Dust/Splashing
Insulation class (IEC 85):	B

Others:

Net weight:	61.1 lb
Gross weight:	72.1 lb
Shipping volume:	4.94 ft^3

GRUNDFOS

Company name:
Created by:
Phone:

Date: 2/20/2018

Position	Count	Description
	1	**CRI 3-4 A-FGJ-I-V-HQQV**



Product No.: 96083653
Vertical, non-self-priming, multistage, in-line, centrifugal pump for installation in pipe systems and mounting on a foundation.

The pump has the following characteristics:
- Impellers, intermediate chambers and outer sleeve are made of
- Pump head cover and base are made of
- The shaft seal has assembly length according to EN 12756.
- Power transmission is via cast iron split coupling.

flanges/couplings.

The motor is a 1-phase AC motor.

Controls:

Frequency converter:	NONE

Liquid:

Pumped liquid:	Water
Liquid temperature during operation:	68 °F
Density:	62.29 lb/ft³

Technical:

Speed for pump data:	3464 rpm
Actual calculated flow:	14.3 US gpm
Resulting head of the pump:	95.02 ft
Pump orientation:	Vertical
Shaft seal arrangement:	Single
Code for shaft seal:	HQQV
Approvals on nameplate:	CURUS
Curve tolerance:	ISO9906:2012 3B

Materials:

Base:	Stainless steel EN 1.4408 AISI 316
Impeller:	Stainless steel EN 1.4301 AISI 304
Bearing material:	SIC

Installation:

Maximum ambient temperature:	104 °F
Max pressure at stated temperature:	363 psi / 194 °F 363 psi / -4 °F

GRUNDFOS

Company name:
Created by:
Phone:

Date: 2/20/2018

Position	Count	Description	
		Type of connection:	DIN / ANSI / JIS
		Size of inlet connection:	DN 25/32
		Size of suction port:	1 1/4 inch
		Size of outlet connection:	DN 25/32
		Size of outlet port:	1 1/4 inch
		Pressure rating:	PN 25
		Flange size for motor:	56C
		Flange rating inlet:	300 lb
		Electrical data:	
		Motor standard:	NEMA
		Motor type:	BALDOR
		IE Efficiency class:	NA
		Rated power - P2:	0.75 HP
		Power (P2) required by pump:	0.75 HP
		Main frequency:	60 Hz
		Rated voltage:	1 x 115/208-230 V
		Service factor:	1.25
		Rated current:	9,60/5,00-4,80 A
		Rated speed:	3450 rpm
		Number of poles:	2
		Enclosure class (IEC 34-5):	54 Dust/Splashing
		Insulation class (IEC 85):	B
		Others:	
		Net weight:	61.1 lb
		Gross weight:	72.1 lb
		Shipping volume:	4.94 ft^3

Company name:
Created by:
Phone:

Date: 2/20/2018

96083653 CRI 3-4 60 Hz

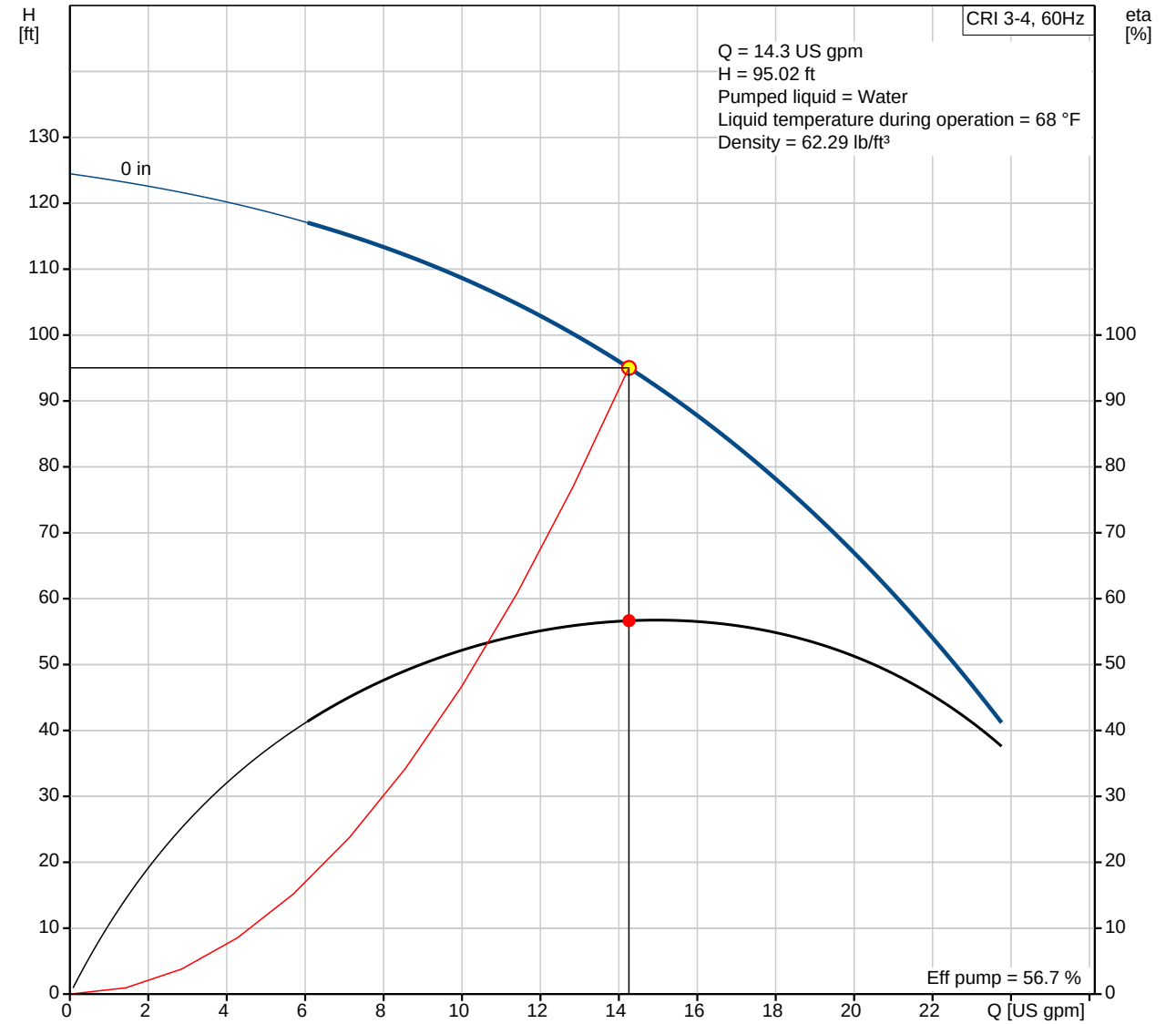

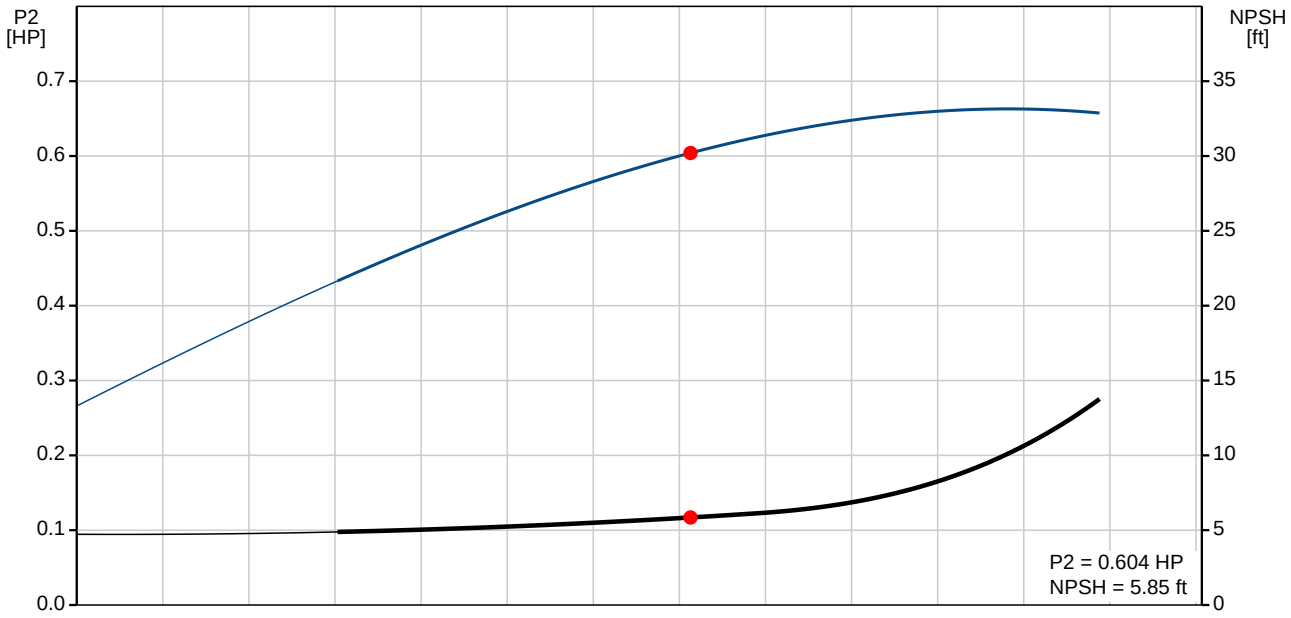

Company name:
Created by:
Phone:

Date: 2/20/2018

Description	Value
General information:	
Product name:	CRI 3-4 A-FGJ-I-V-HQQV
Product No.:	96083653
EAN:	5700395188516
Technical:	
Speed for pump data:	3464 rpm
Actual calculated flow:	14.3 US gpm
Resulting head of the pump:	95.02 ft
Stages:	4
Impellers:	4
Low NPSH:	N
Pump orientation:	Vertical
Shaft seal arrangement:	Single
Code for shaft seal:	HQQV
Approvals on nameplate:	CURUS
Curve tolerance:	ISO9906:2012 3B
Pump version:	A
Model:	A
Cooling:	TEFC
Materials:	
Base:	Stainless steel
	EN 1.4408
	AISI 316
Impeller:	Stainless steel
	EN 1.4301
	AISI 304
Material code:	I
Code for rubber:	V
Bearing material:	SIC
Installation:	
Maximum ambient temperature:	104 °F
Max pressure at stated temperature:	363 psi / 194 °F
	363 psi / -4 °F
Type of connection:	DIN / ANSI / JIS
Connect code:	FGJ
Size of inlet connection:	DN 25/32
Size of suction port:	1 1/4 inch
Size of outlet connection:	DN 25/32
Size of outlet port:	1 1/4 inch
Pressure rating:	PN 25
Flange size for motor:	56C
Flange rating inlet:	300 lb
Liquid:	
Pumped liquid:	Water
Liquid temperature during operation:	68 °F
Density:	62.29 lb/ft³
Electrical data:	
Motor standard:	NEMA
Motor type:	BALDOR
IE Efficiency class:	NA
Rated power - P2:	0.75 HP
Power (P2) required by pump:	0.75 HP
Main frequency:	60 Hz
Rated voltage:	1 x 115/208-230 V

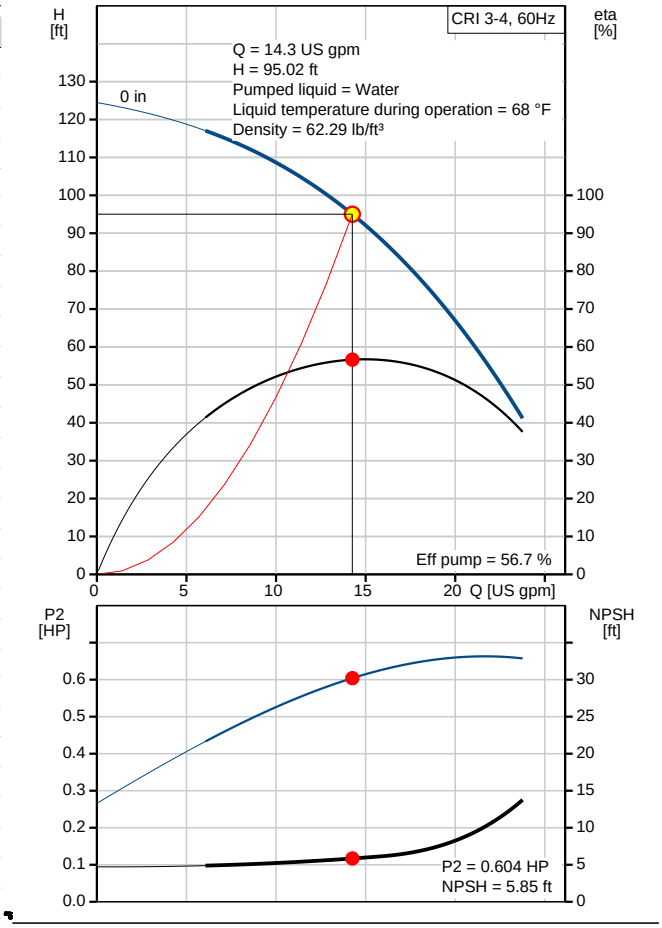

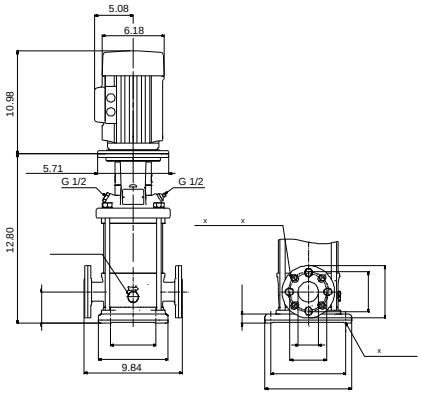

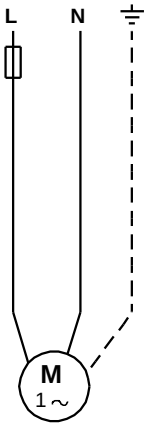

GRUNDFOS

Company name:
Created by:
Phone:

Date: 2/20/2018

Description	Value
Service factor:	1.25
Rated current:	9,60/5,00-4,80 A
Load current:	11.4/6.0-5.7 A
Rated speed:	3450 rpm
Number of poles:	2
Enclosure class (IEC 34-5):	54 Dust/Splashing
Insulation class (IEC 85):	B
Motor protection:	NONE
Motor Number:	84Z04001
Controls:	
Frequency converter:	NONE
Others:	
Net weight:	61.1 lb
Gross weight:	72.1 lb
Shipping volume:	4.94 ft^3

Company name:
Created by:
Phone:

Date: 2/20/2018

96083653 CRI 3-4 60 Hz

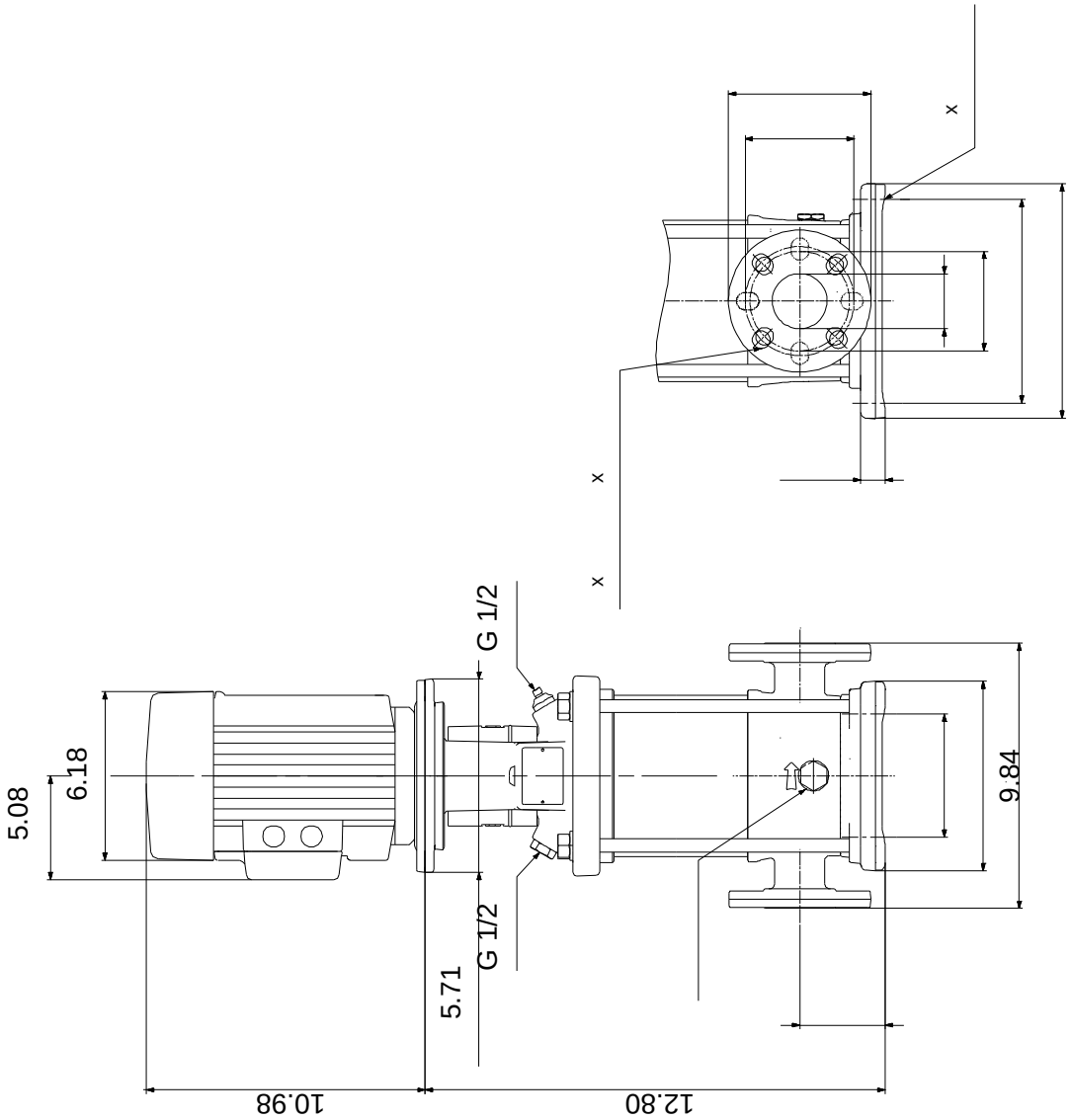

Note! All units are in [mm] unless otherwise stated.
Disclaimer: This simplified dimensional drawing does not show all details.

Company name:
Created by:
Phone:

Date: 2/20/2018

96083653 CRI 3-4 60 Hz

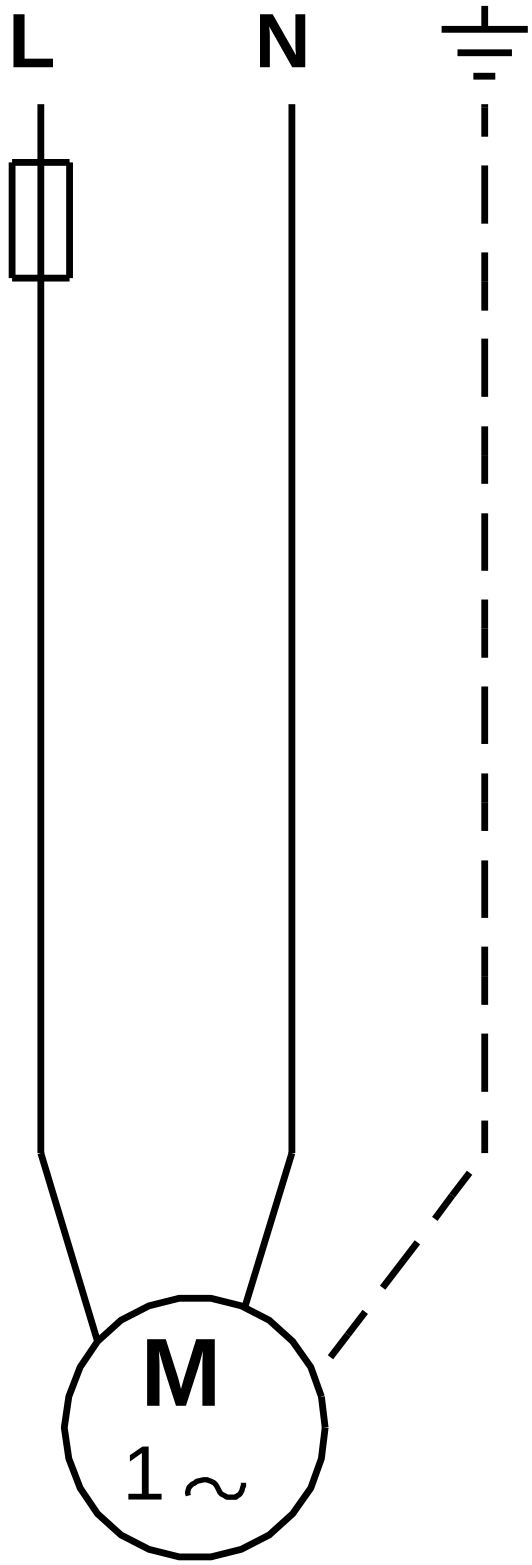

All units are [mm] unless otherwise presented.

Company name:
Created by:
Phone:

Date: 2/20/2018

Order Data:

Product name: CRI 3-4 A-FGJ-I-V-HQQV
Amount: 1
Product No.: 96083653

Total: Price on request

Company name:
Created by:
Phone:

Date: 2/20/2018

Exploded view (TM02 0212 4100)

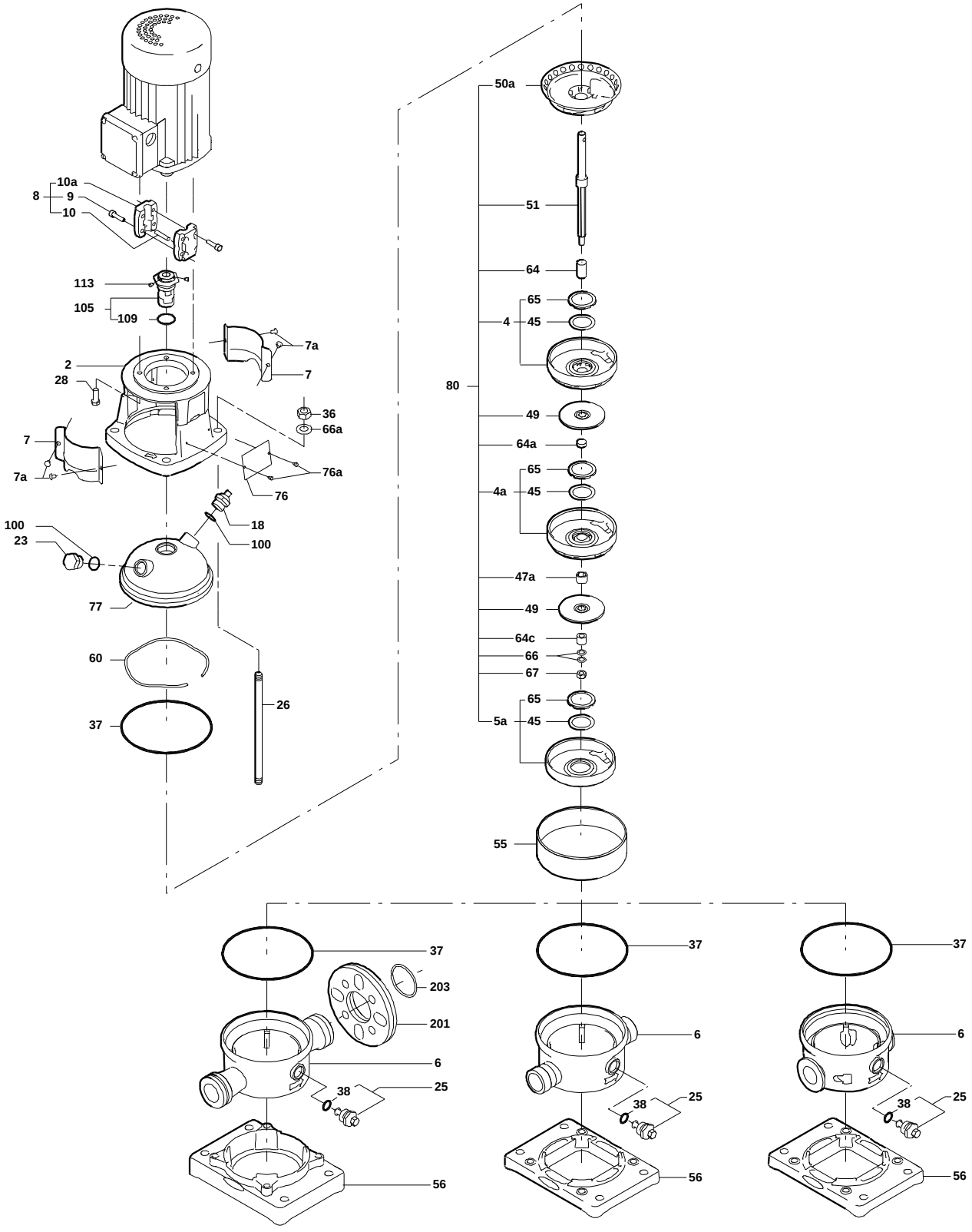

GRUNDFOS

Company name:
Created by:
Phone:

Date: 2/20/2018

Sectional drawing (TM02 0215 4100)

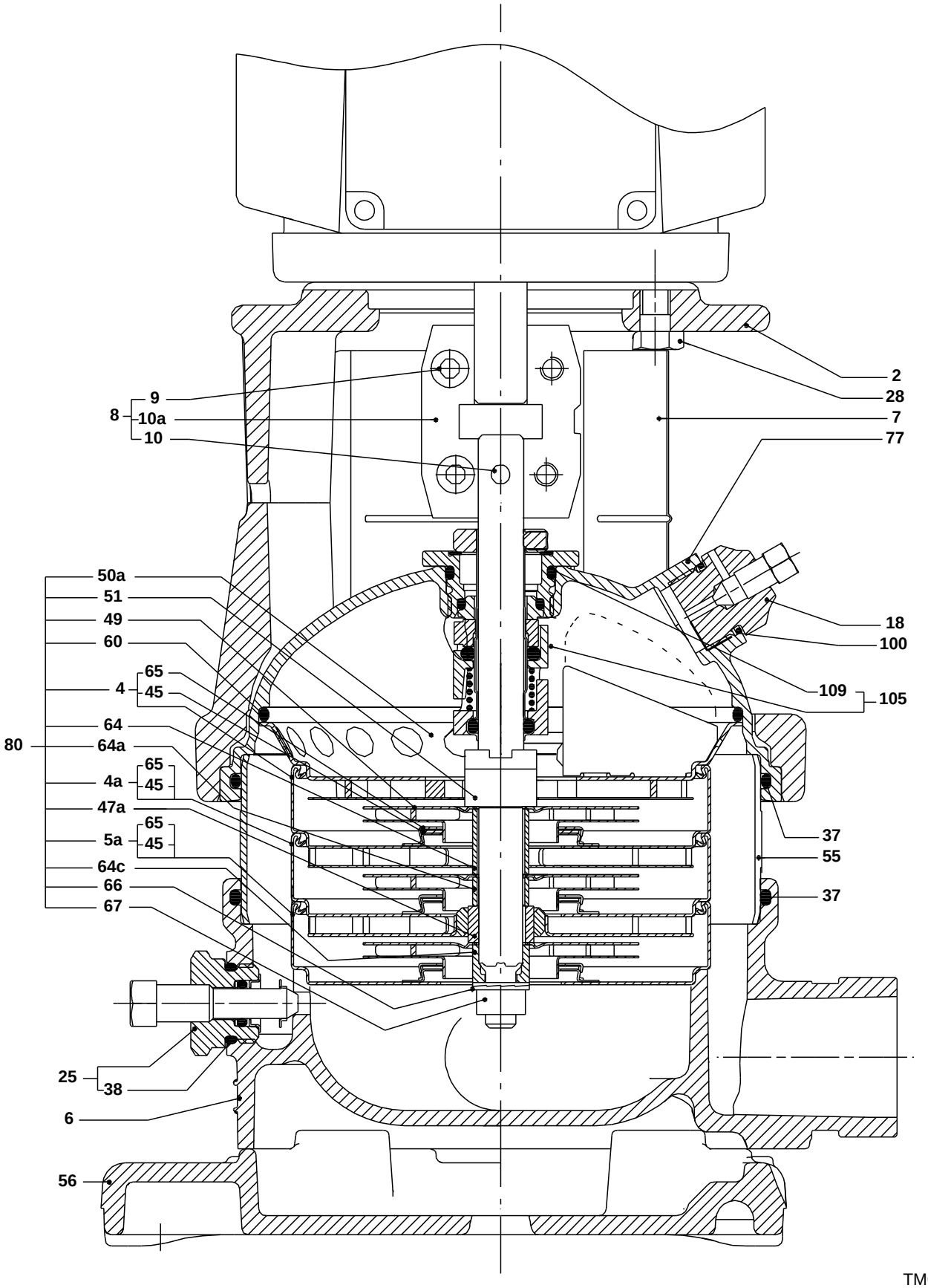

Company name:
Created by:
Phone:

Date: 2/20/2018

Parts list CRI 3-4, Prod number 96083653
Valid from 1.1.2004 (0401)

	Position	Description	Annotation	Classification data	Part No.	Count	Unit
		Motor				1	pcs
-		Base cpl.				1	pcs
	6	Base				1	
	56	Base plate				1	
	201.a	Flange				2	
	203	Lock ring				2	
-		Sealing parts				1	pcs
-	25	Drain plug w/bypass valve				1	
	38	O-ring		Diameter: 16,3			
				Material type: FKM			
				Thickness: 2,4			
	37	O-ring		Diameter: 137,5		2	
				Material type: FKM			
				Thickness: 3,3			
	100	O-ring		Diameter: 16,3		2	
				Material type: FKM			
				Thickness: 2,4			
-	2	Pump head cpl.				1	pcs
	2	Motor stool				1	
	7	Coupling guard				2	
	7a	Thread cutting screw				4	
-	18	Air vent screw				1	
		Plug					
		Spindle					
-	25	Drain plug				1	
	23	Pipe plug					
	25	Drain plug					
	28	Hex head cap screw		Length: 25		4	
				Thread: UNC 3/8"			
	60	Formed wire spring				1	
	77	Pump cover				1	
+	8	Coupling cpl.				1	pcs
	26	Staybolt		Length: 169		4	pcs
				Thread: M12			
	36a	Washer		Designation: DIN 125 A		4	pcs
				Inner diameter: 13			
				Outer diameter: 24			
				Thickness: 2,5			
	55	Outer sleeve				1	pcs
	66a	Nut		Thread: M12		4	pcs
-	80	Chamber stack				1	pcs
-		Guide vane cpl.				1	
		Guide vane					
		Plate					
	50b	Top plate					
-	4	Chamber cpl.				2	
		Guide vane					
		Plate					
		Retainer					
		Intermediate chamber					
		Vane					
	45	Neck ring					
	65	Retainer					

GRUNDFOS

Company name:
Created by:
Phone:

Date: 2/20/2018

	Position	Description	Annotation	Classification data	Part No.	Count	Unit
-	4a	Chamber w. bearing cpl.				1	
		Guide vane					
		Retainer for bearing					
		Bearing bush					
		Retainer					
		Intermediate chamber					
		Vane					
	45	Neck ring					
	65	Retainer					
-	5a	Chamber cpl.				1	
		Retainer					
		Intermediate chamber					
		Vane					
	45	Neck ring					
	65	Retainer					
	36	Lock nut		Thread: M8		1	
	47a	Bearing ring, rotating				1	
	49	Impeller cpl.				4	
	51	Shaft, spline, cpl.				1	
	64a	Spacing pipe				2	
	64a	Spacing pipe		Inner diameter: 12,85		1	
				Outer diameter: 15,85			
				Length: 4,50			
	64c	Clamp, splined		Inner diameter: 8,5		1	
				Outer diameter: 15			
	66	Wedge lock washer				1	
-	105	Shaft seal		Material type: HQQV	1		pcs
		O-ring				1	
		O-ring				1	
		O-ring				1	
		Seal driver, upper				1	
		Seal driver, lower				1	
		Spacer ring				1	
		Pipe				1	
		Plug				1	
		Plug				1	
		Compression spring				1	
		Socket set screw				3	
	103	Seal ring, stationary				1	
	105	Seal ring, rotating				1	
	109	O-ring				1	
	113	Driver				1	