GRUNDFOS

Submittal Data

PROJECT:		UNIT TAG:		QUANTITY:	
		TYPE OF SERVICE:			
REPRESENTATIVE:		SUBMITTED BY:		DATE:	
ENGINEER:		APPROVED BY:		DATE:	
CONTRACTOR:		ORDER NO.:		DATE:	



Product photo could vary from the actual product

CRN 1-9

Vertical, multistage centrifugal pump with suction and discharge ports on same the level. Pump materials in contact with the liquid are in high-grade stainless steel (EN 1.4401) (AISI 316)

Conditions of Service	
Flow:	8.94 US gpm
Head:	206.5 ft
Efficiency:	
Liquid:	Water
Temperature:	68 °F
NPSH required:	4.81 ft
Viscosity:	
Specific Gravity:	1.000

Pump Data	
Max pressure at stated temperature:	363 psi / 194 °F
Shaft seal:	HQQV
Product number:	On request

Motor Data	
Main frequency:	60 Hz

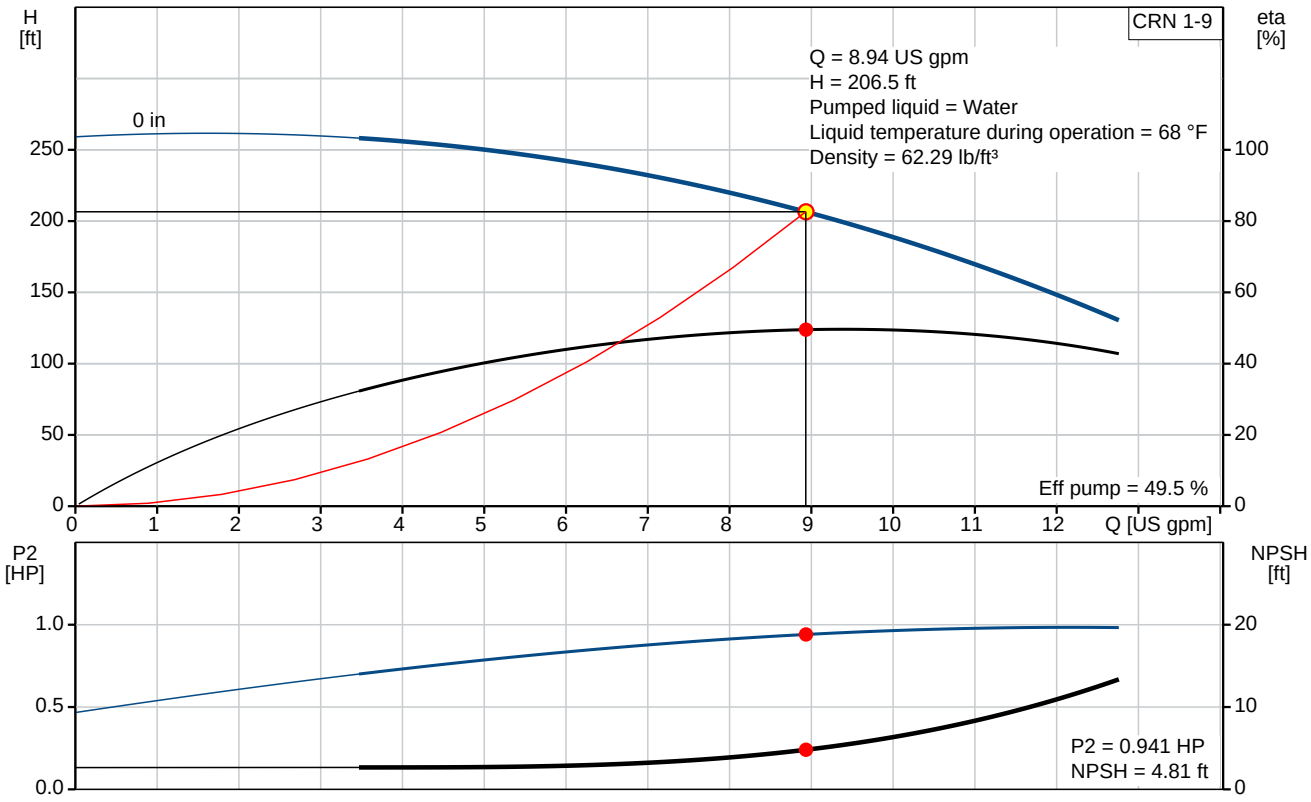

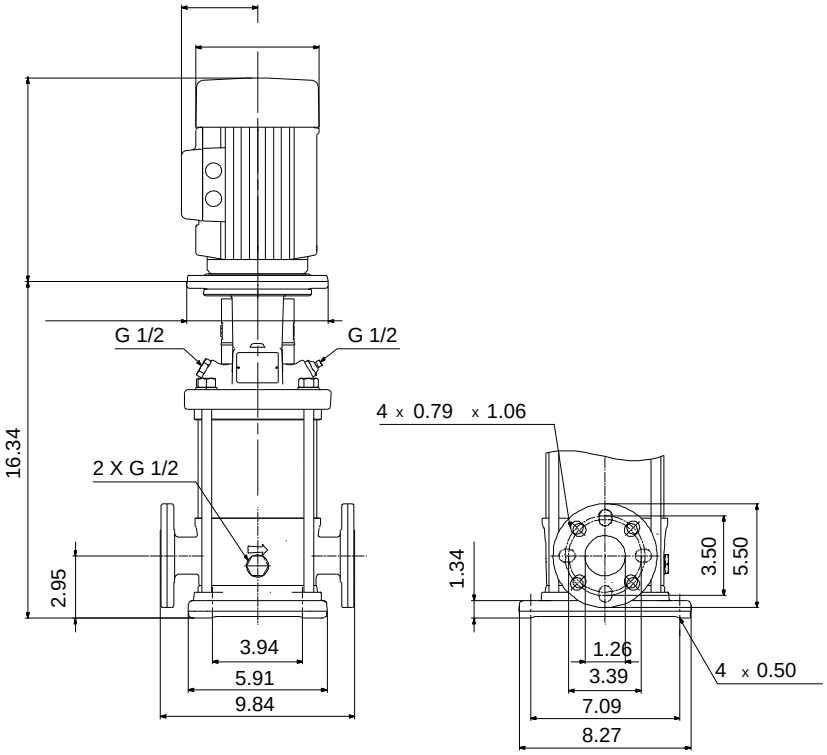

Materials:

Base:	Stainless steel EN 1.4408 AISI 316
Impeller:	Stainless steel AISI 316 EN 1.4401
Material code:	G
Code for rubber:	V

Company name:
Created by:
Phone:

Date: 2/22/2018

Tender Text



Product photo could vary from the actual product

Product No.: On request
CRN 1-9 A-FGJ-G-V-HQQV
Vertical, non-self-priming, multistage, in-line, centrifugal pump for installation in pipe systems and mounting on a foundation.

The pump has the following characteristics:
- Impellers, intermediate chambers and outer sleeve are made of
- Pump head cover and base are made of
- The shaft seal has assembly length according to EN 12756.
- Power transmission is via cast iron split coupling.

flanges/couplings.

Controls:

Frequency converter:	NONE

Liquid:

Pumped liquid:	Water
Liquid temperature during operation:	68 °F
Density:	62.29 lb/ft³

Technical:

Speed for pump data:	3484 rpm
Actual calculated flow:	8.94 US gpm
Resulting head of the pump:	206.5 ft
Pump orientation:	Vertical
Shaft seal arrangement:	Single
Code for shaft seal:	HQQV
Curve tolerance:	ISO9906:2012 3B

Materials:

Base:	Stainless steel EN 1.4408 AISI 316
Impeller:	Stainless steel EN 1.4401 AISI 316
Bearing material:	SIC

GRUNDFOS

Company name:
Created by:
Phone:

Date: 2/22/2018

Installation:

Max pressure at stated temperature:	363 psi / 194 °F
	363 psi / -4 °F
Type of connection:	DIN / ANSI / JIS
Size of inlet connection:	DN 25/32
Size of suction port:	1 1/4 inch
Size of outlet connection:	DN 25/32
Size of outlet port:	1 1/4 inch
Pressure rating:	PN 25
Flange size for motor:	56C
Flange rating inlet:	300 lb

Electrical data:

Motor standard:	NEMA
Power (P2) required by pump:	1 HP

Others:

Net weight:	40.1 lb
Gross weight:	51.1 lb
Shipping volume:	4.94 ft^3

GRUNDFOS

Company name:
Created by:
Phone:

Date: 2/22/2018

Position	Count	Description
	1	**CRN 1-9 A-FGJ-G-V-HQQV**



Product photo could vary from the actual product

Product No.: On request
Vertical, non-self-priming, multistage, in-line, centrifugal pump for installation in pipe systems and mounting on a foundation.

The pump has the following characteristics:
- Impellers, intermediate chambers and outer sleeve are made of
- Pump head cover and base are made of
- The shaft seal has assembly length according to EN 12756.
- Power transmission is via cast iron split coupling.

flanges/couplings.

Controls:

Frequency converter:	NONE

Liquid:

Pumped liquid:	Water
Liquid temperature during operation:	68 °F
Density:	62.29 lb/ft³

Technical:

Speed for pump data:	3484 rpm
Actual calculated flow:	8.94 US gpm
Resulting head of the pump:	206.5 ft
Pump orientation:	Vertical
Shaft seal arrangement:	Single
Code for shaft seal:	HQQV
Curve tolerance:	ISO9906:2012 3B

Materials:

Base:	Stainless steel EN 1.4408 AISI 316
Impeller:	Stainless steel EN 1.4401 AISI 316
Bearing material:	SIC

Installation:

Max pressure at stated temperature:	363 psi / 194 °F

GRUNDFOS

Company name:
Created by:
Phone:

Date: 2/22/2018

Position	Count	Description
		363 psi / -4 °F
		Type of connection: DIN / ANSI / JIS
		Size of inlet connection: DN 25/32
		Size of suction port: 1 1/4 inch
		Size of outlet connection: DN 25/32
		Size of outlet port: 1 1/4 inch
		Pressure rating: PN 25
		Flange size for motor: 56C
		Flange rating inlet: 300 lb
		Electrical data:
		Motor standard: NEMA
		Power (P2) required by pump: 1 HP
		Others:
		Net weight: 40.1 lb
		Gross weight: 51.1 lb
		Shipping volume: 4.94 ft³

Company name:
Created by:
Phone:

Date: 2/22/2018

On request CRN 1-9 60 Hz

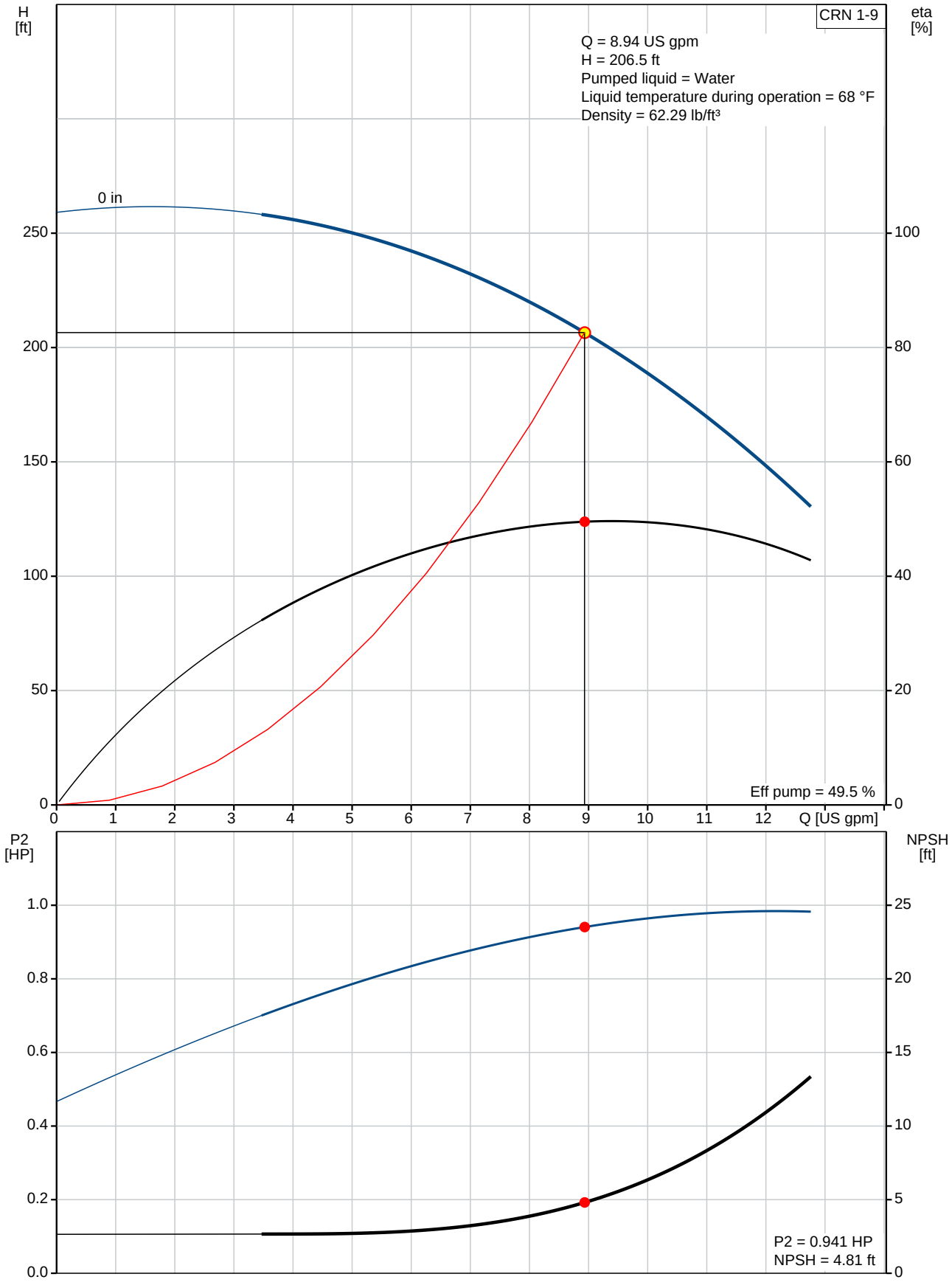

Company name:
Created by:
Phone:

Date: 2/22/2018

Description	Value
General information:	
Product name:	CRN 1-9 A-FGJ-G-V-HQQV
Product No.:	On request
EAN:	On request
Technical:	
Speed for pump data:	3484 rpm
Actual calculated flow:	8.94 US gpm
Resulting head of the pump:	206.5 ft
Stages:	9
Impellers:	9
Low NPSH:	N
Pump orientation:	Vertical
Shaft seal arrangement:	Single
Code for shaft seal:	HQQV
Curve tolerance:	ISO9906:2012 3B
Pump version:	A
Model:	A
Materials:	
Base:	Stainless steel
	EN 1.4408
	AISI 316
Impeller:	Stainless steel
	EN 1.4401
	AISI 316
Material code:	G
Code for rubber:	V
Bearing material:	SIC
Installation:	
Max pressure at stated temperature:	363 psi / 194 °F
	363 psi / -4 °F
Type of connection:	DIN / ANSI / JIS
Connect code:	FGJ
Size of inlet connection:	DN 25/32
Size of suction port:	1 1/4 inch
Size of outlet connection:	DN 25/32
Size of outlet port:	1 1/4 inch
Pressure rating:	PN 25
Flange size for motor:	56C
Flange rating inlet:	300 lb
Liquid:	
Pumped liquid:	Water
Liquid temperature during operation:	68 °F
Density:	62.29 lb/ft³
Electrical data:	
Motor standard:	NEMA
Power (P2) required by pump:	1 HP
Controls:	
Frequency converter:	NONE
Others:	
Net weight:	40.1 lb
Gross weight:	51.1 lb
Shipping volume:	4.94 ft³

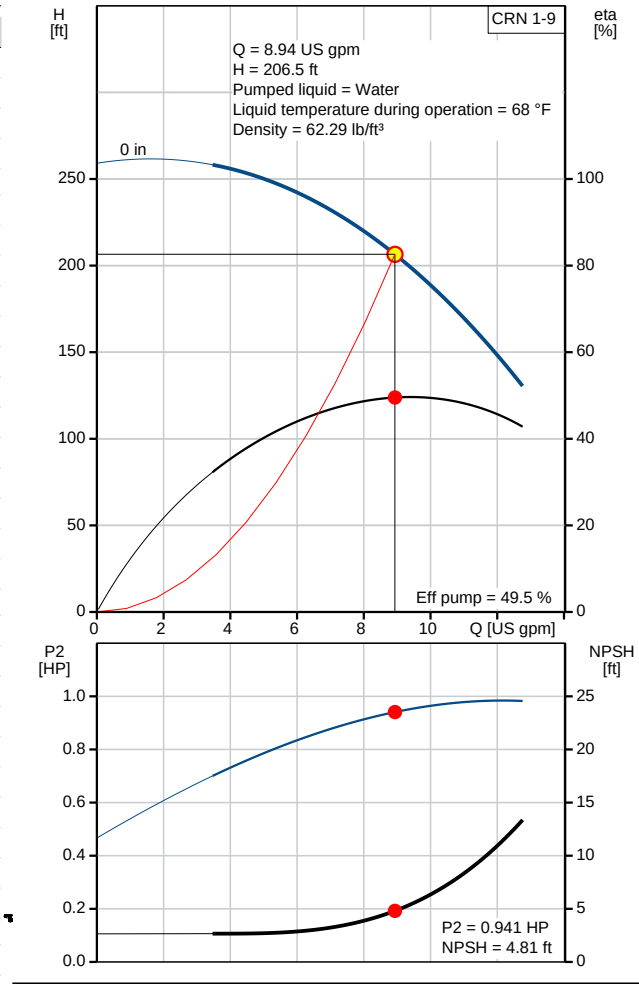

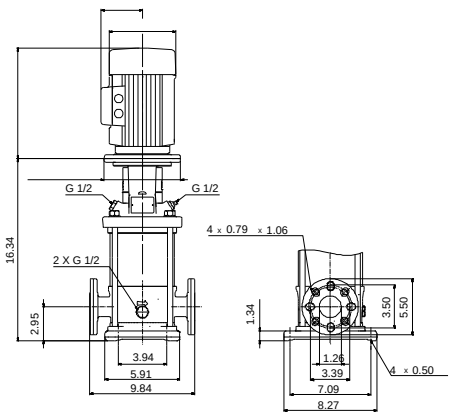

Company name:
Created by:
Phone:

Date: 2/22/2018

On request CRN 1-9 60 Hz

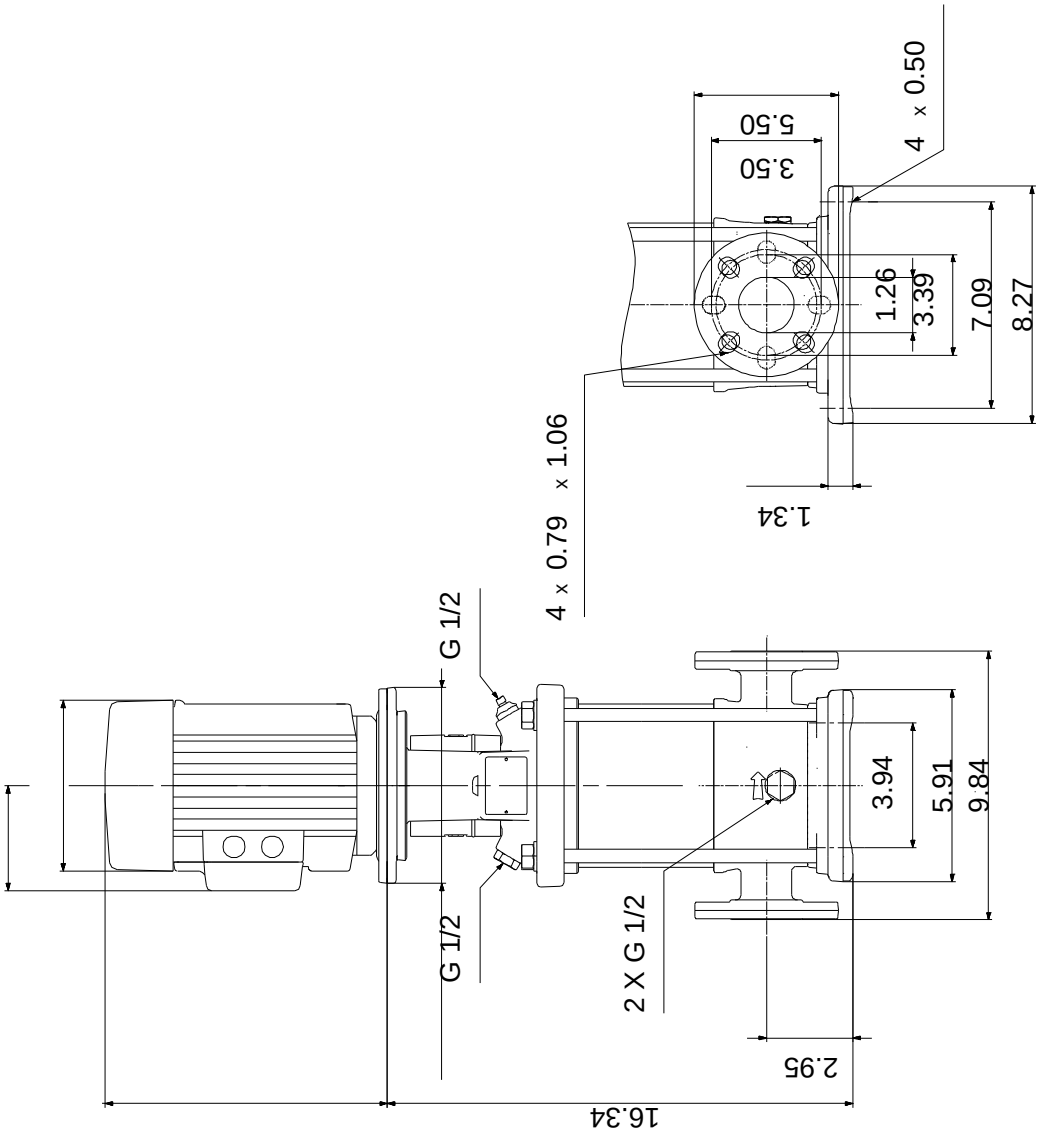

Note! All units are in [mm] unless otherwise stated.
Disclaimer: This simplified dimensional drawing does not show all details.

Company name:
Created by:
Phone:

Date: 2/22/2018

Order Data:

Product name:	CRN 1-9 A-FGJ-G-V-HQQV
Amount:	1
Product No.:	On request

Total: Price on request

Company name:
Created by:
Phone:

Date: 2/22/2018

Exploded view (TM02 0212 4100)

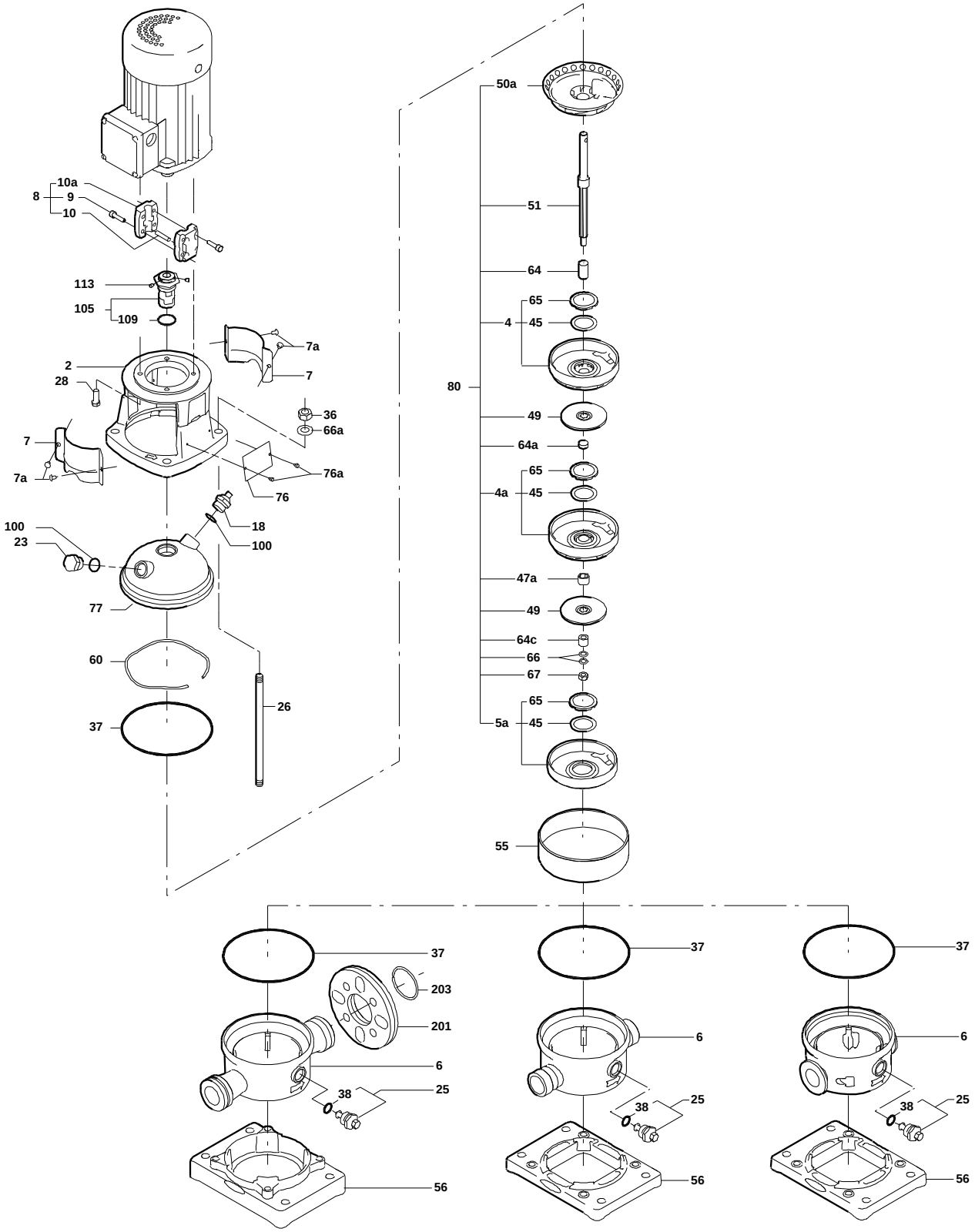

TM02

GRUNDFOS

Company name:
Created by:
Phone:

Date: 2/22/2018

Sectional drawing (TM02 0215 4100)

