GRUNDFOS

Submittal Data

PROJECT:		UNIT TAG:		QUANTITY:	
		TYPE OF SERVICE:			
REPRESENTATIVE:		SUBMITTED BY:		DATE:	
ENGINEER:		APPROVED BY:		DATE:	
CONTRACTOR:		ORDER NO.:		DATE:	



Product photo could vary from the actual product

CRN 3-8

Vertical, multistage centrifugal pump with suction and discharge ports on same the level. Pump materials in contact with the liquid are in high-grade stainless steel (EN 1.4401) (AISI 316)

Conditions of Service	
Flow:	14.3 US gpm
Head:	194.7 ft
Efficiency:	
Liquid:	Water
Temperature:	68 °F
NPSH required:	5.85 ft
Viscosity:	
Specific Gravity:	1.000

Pump Data	
Max pressure at stated temperature:	363 psi / 250 °F
Maximum ambient temperature:	104 °F
Approvals:	CURUS,NSF61
Shaft seal:	HQQE
Product number:	96083751

Motor Data	
Rated power - P2:	1.5 HP
Rated voltage:	115/208-230 V
Main frequency:	60 Hz
Insulation class:	B
Motor protection:	NONE
Motor type:	BALDOR

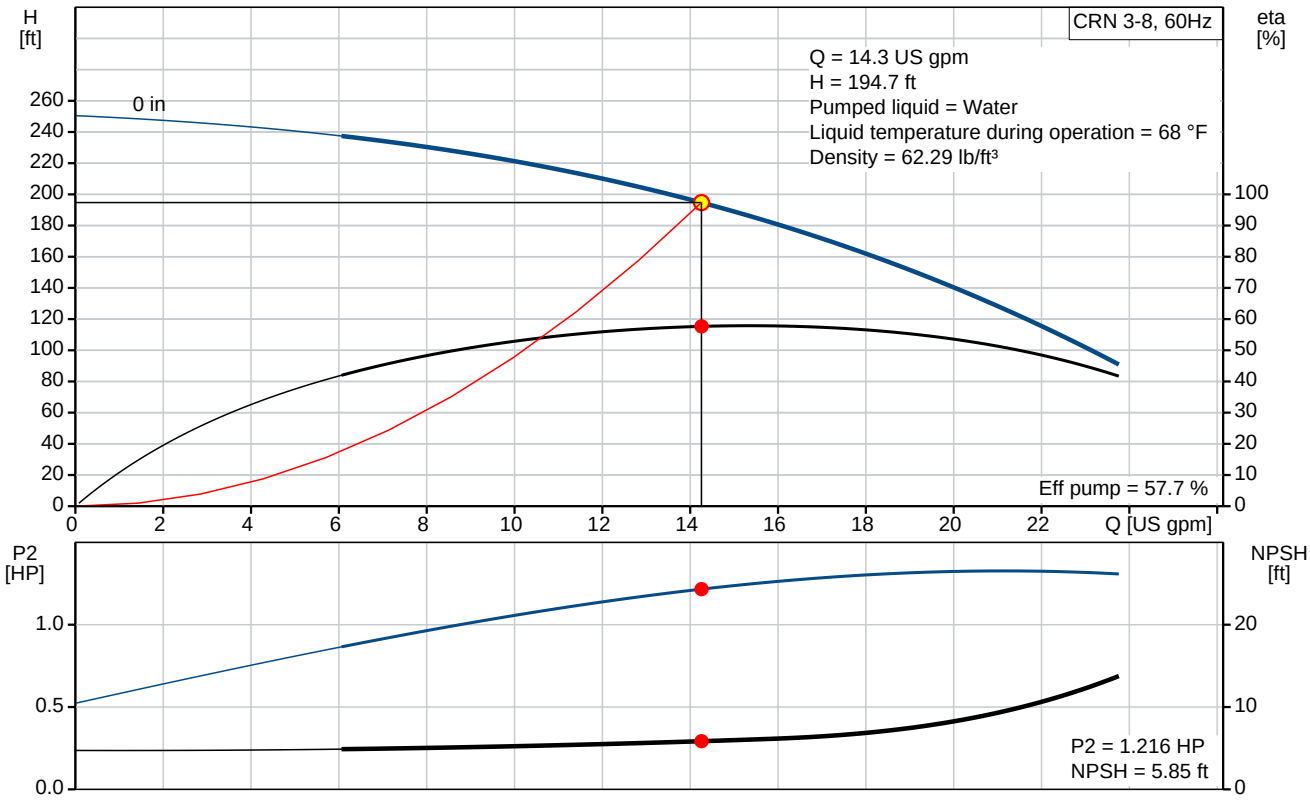

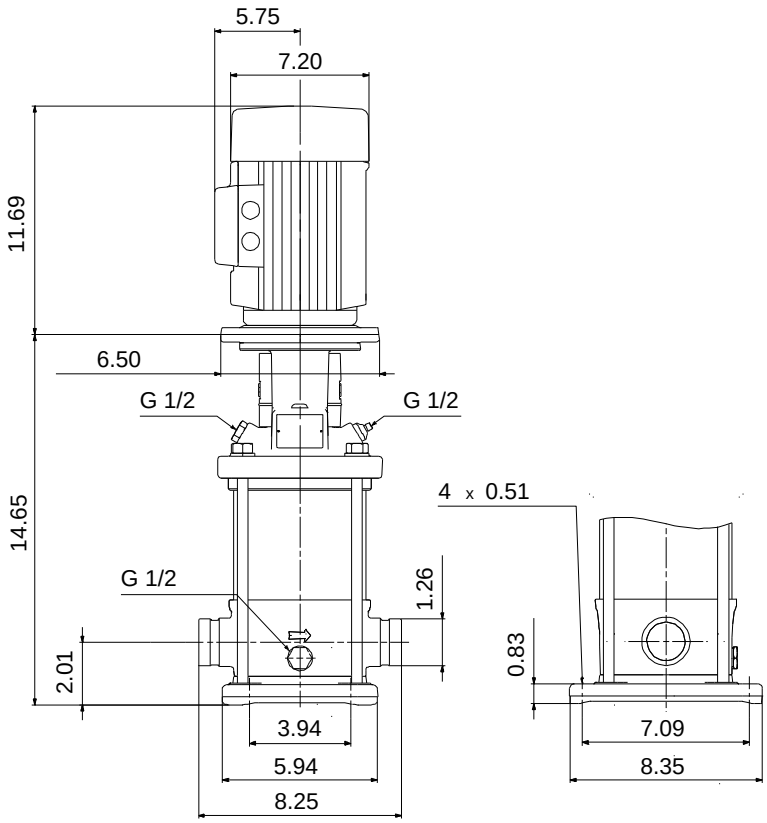

Materials:

Base:	Stainless steel EN 1.4408 AISI 316
Impeller:	Stainless steel AISI 316 EN 1.4401
Material code:	G
Code for rubber:	E

Company name:
Created by:
Phone:

Date: 2/21/2018

Tender Text



Product No.: 96083751
CRN 3-8 A-P-G-E-HQQE
Vertical, non-self-priming, multistage, in-line, centrifugal pump for installation in pipe systems and mounting on a foundation.

The pump has the following characteristics:
- Impellers, intermediate chambers and outer sleeve are made of
- Pump head cover and base are made of
- The shaft seal has assembly length according to EN 12756.
- Power transmission is via cast iron split coupling.
flanges/couplings.

The motor is a 1-phase AC motor.

Controls:

Frequency converter:	NONE

Liquid:

Pumped liquid:	Water
Liquid temperature during operation:	68 °F
Density:	62.29 lb/ft³

Technical:

Speed for pump data:	3450 rpm
Actual calculated flow:	14.3 US gpm
Resulting head of the pump:	194.7 ft
Pump orientation:	Vertical
Shaft seal arrangement:	Single
Code for shaft seal:	HQQE
Approvals on nameplate:	CURUS,NSF61
Curve tolerance:	ISO9906:2012 3B

Materials:

Base:	Stainless steel EN 1.4408 AISI 316
Impeller:	Stainless steel EN 1.4401 AISI 316
Bearing material:	SIC

Installation:

Maximum ambient temperature:	104 °F
Max pressure at stated temperature:	363 psi / 250 °F

	363 psi / -4 °F
Type of connection:	PJE
Size of inlet connection:	DN 32
Size of suction port:	1 1/4 inch
Size of outlet connection:	DN 32
Size of outlet port:	1 1/4 inch
Pressure rating:	PN 50
Flange size for motor:	56C

Electrical data:

Motor standard:	NEMA
Motor type:	BALDOR
IE Efficiency class:	NA
Rated power - P2:	1.5 HP
Power (P2) required by pump:	1.5 HP
Main frequency:	60 Hz
Rated voltage:	1 x 115/208-230 V
Service factor:	1,30
Rated current:	17/9,50-8,60 A
Rated speed:	3450 rpm
Number of poles:	2
Insulation class (IEC 85):	B

Others:

Net weight:	72.5 lb
Gross weight:	83.5 lb
Shipping volume:	6.11 ft^3

GRUNDFOS

Company name:
Created by:
Phone:

Date: 2/21/2018

Position	Count	Description
	1	**CRN 3-8 A-P-G-E-HQQE**



Product No.: 96083751
Vertical, non-self-priming, multistage, in-line, centrifugal pump for installation in pipe systems and mounting on a foundation.

The pump has the following characteristics:
- Impellers, intermediate chambers and outer sleeve are made of
- Pump head cover and base are made of
- The shaft seal has assembly length according to EN 12756.
- Power transmission is via cast iron split coupling.

flanges/couplings.

The motor is a 1-phase AC motor.

Controls:

Frequency converter:	NONE

Liquid:

Pumped liquid:	Water
Liquid temperature during operation:	68 °F
Density:	62.29 lb/ft³

Technical:

Speed for pump data:	3450 rpm
Actual calculated flow:	14.3 US gpm
Resulting head of the pump:	194.7 ft
Pump orientation:	Vertical
Shaft seal arrangement:	Single
Code for shaft seal:	HQQE
Approvals on nameplate:	CURUS,NSF61
Curve tolerance:	ISO9906:2012 3B

Materials:

Base:	Stainless steel EN 1.4408 AISI 316
Impeller:	Stainless steel EN 1.4401 AISI 316
Bearing material:	SIC

Installation:

Maximum ambient temperature:	104 °F
Max pressure at stated temperature:	363 psi / 250 °F 363 psi / -4 °F

Position	Count	Description
		Type of connection: PJE Size of inlet connection: DN 32 Size of suction port: 1 1/4 inch Size of outlet connection: DN 32 Size of outlet port: 1 1/4 inch Pressure rating: PN 50 Flange size for motor: 56C **Electrical data:** Motor standard: NEMA Motor type: BALDOR IE Efficiency class: NA Rated power - P2: 1.5 HP Power (P2) required by pump: 1.5 HP Main frequency: 60 Hz Rated voltage: 1 x 115/208-230 V Service factor: 1,30 Rated current: 17/9,50-8,60 A Rated speed: 3450 rpm Number of poles: 2 Insulation class (IEC 85): B **Others:** Net weight: 72.5 lb Gross weight: 83.5 lb Shipping volume: 6.11 ft^3

Company name:
Created by:
Phone:

Date: 2/21/2018

96083751 CRN 3-8 60 Hz

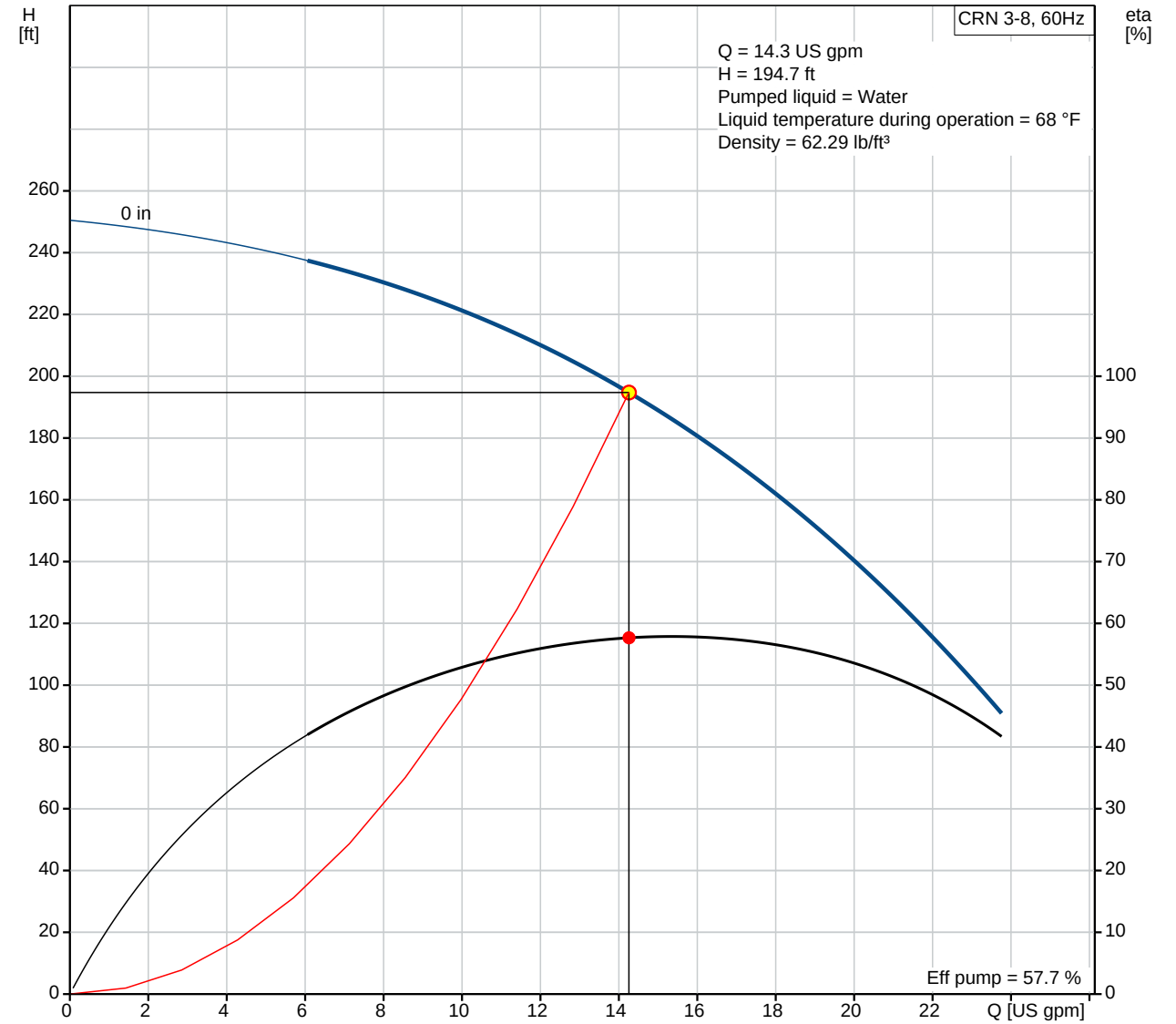

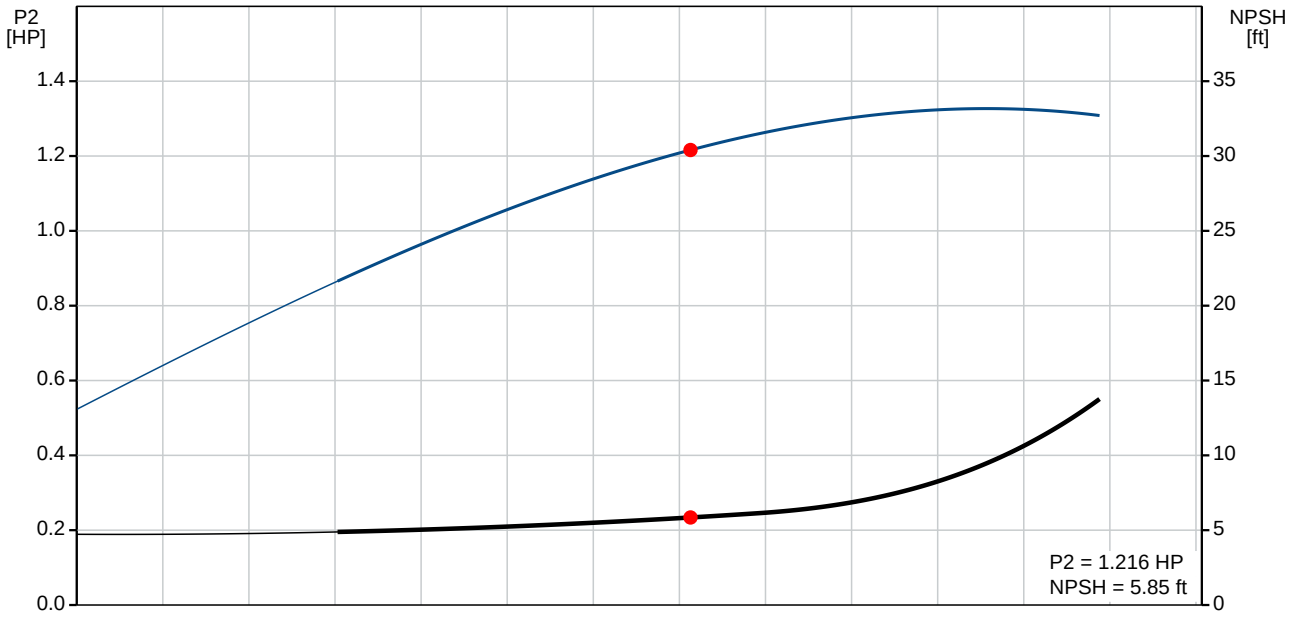

Company name:
Created by:
Phone:

Date: 2/21/2018

Description	Value
General information:	
Product name:	CRN 3-8 A-P-G-E-HQQE
Product No.:	96083751
EAN:	5700395178692
Technical:	
Speed for pump data:	3450 rpm
Actual calculated flow:	14.3 US gpm
Resulting head of the pump:	194.7 ft
Stages:	8
Impellers:	8
Low NPSH:	N
Pump orientation:	Vertical
Shaft seal arrangement:	Single
Code for shaft seal:	HQQE
Approvals on nameplate:	CURUS,NSF61
Curve tolerance:	ISO9906:2012 3B
Pump version:	A
Model:	A
Cooling:	TEFC
Materials:	
Base:	Stainless steel
	EN 1.4408
	AISI 316
Impeller:	Stainless steel
	EN 1.4401
	AISI 316
Material code:	G
Code for rubber:	E
Bearing material:	SIC
Installation:	
Maximum ambient temperature:	104 °F
Max pressure at stated temperature:	363 psi / 250 °F
	363 psi / -4 °F
Type of connection:	PJE
Connect code:	P
Size of inlet connection:	DN 32
Size of suction port:	1 1/4 inch
Size of outlet connection:	DN 32
Size of outlet port:	1 1/4 inch
Pressure rating:	PN 50
Flange size for motor:	56C
Liquid:	
Pumped liquid:	Water
Liquid temperature during operation:	68 °F
Density:	62.29 lb/ft³
Electrical data:	
Motor standard:	NEMA
Motor type:	BALDOR
IE Efficiency class:	NA
Rated power - P2:	1.5 HP
Power (P2) required by pump:	1.5 HP
Main frequency:	60 Hz
Rated voltage:	1 x 115/208-230 V
Service factor:	1,30

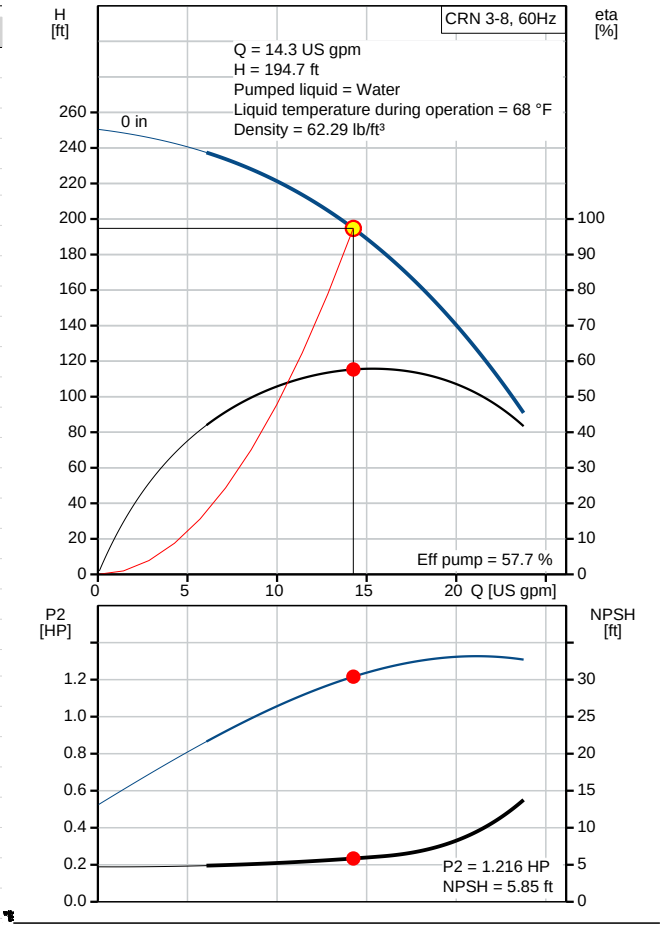

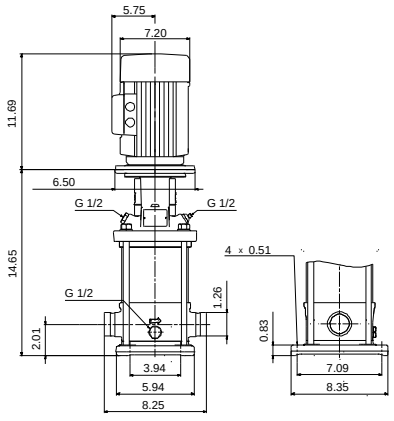

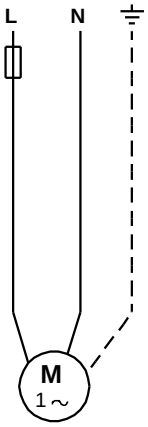

GRUNDFOS

Company name:
Created by:
Phone:

Date: 2/21/2018

Description	Value
Rated current:	17/9,50-8,60 A
Load current:	20,4/11,3-10,2 A
Rated speed:	3450 rpm
Number of poles:	2
Insulation class (IEC 85):	B
Motor protection:	NONE
Motor Number:	84Z04007
Controls:	
Frequency converter:	NONE
Others:	
Net weight:	72.5 lb
Gross weight:	83.5 lb
Shipping volume:	6.11 ft³

Company name:
Created by:
Phone:

Date: 2/21/2018

96083751 CRN 3-8 60 Hz

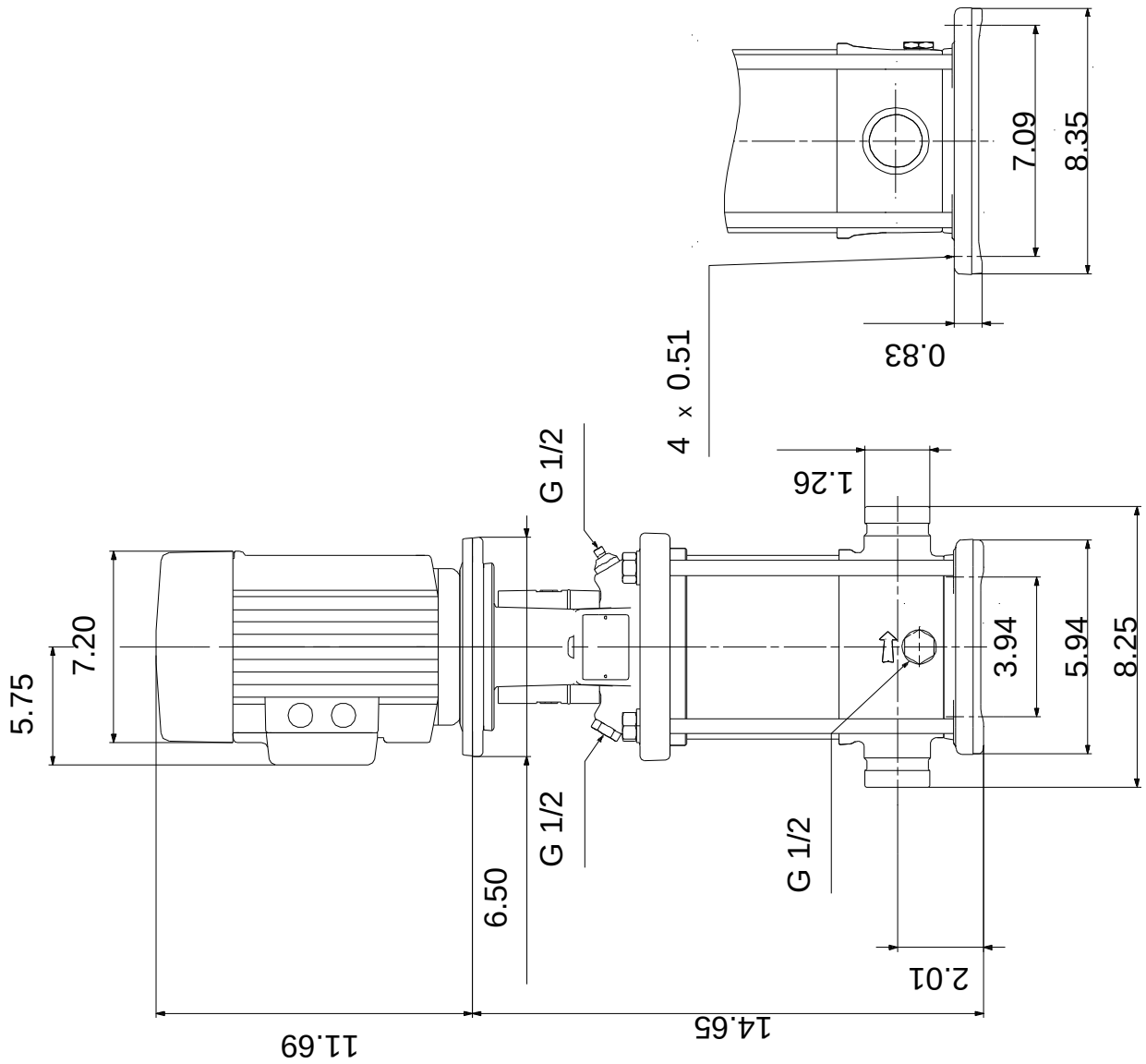

Note! All units are in [mm] unless otherwise stated.
Disclaimer: This simplified dimensional drawing does not show all details.

Company name:
Created by:
Phone:

Date: 2/21/2018

96083751 CRN 3-8 60 Hz

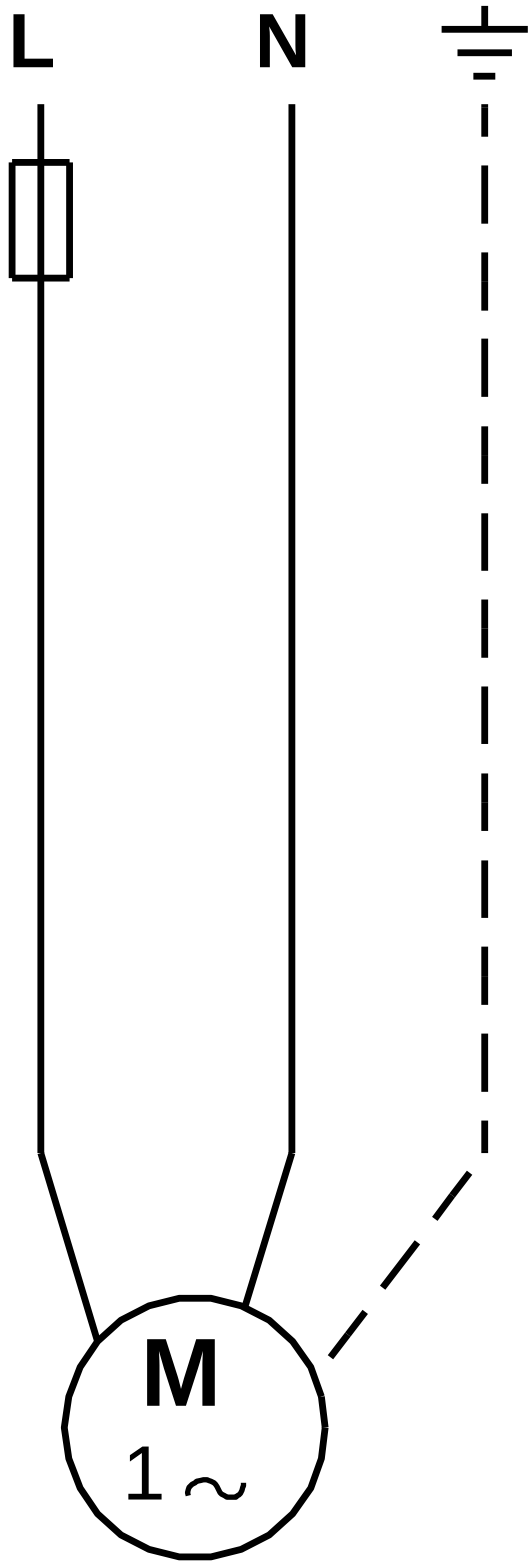

All units are [mm] unless otherwise presented.

Company name:
Created by:
Phone:

Date: 2/21/2018

Order Data:

Product name: CRN 3-8 A-P-G-E-HQQE
Amount: 1
Product No.: 96083751

Total: Price on request

Company name:
Created by:
Phone:

Date: 2/21/2018

Exploded view (TM02 0212 4100)

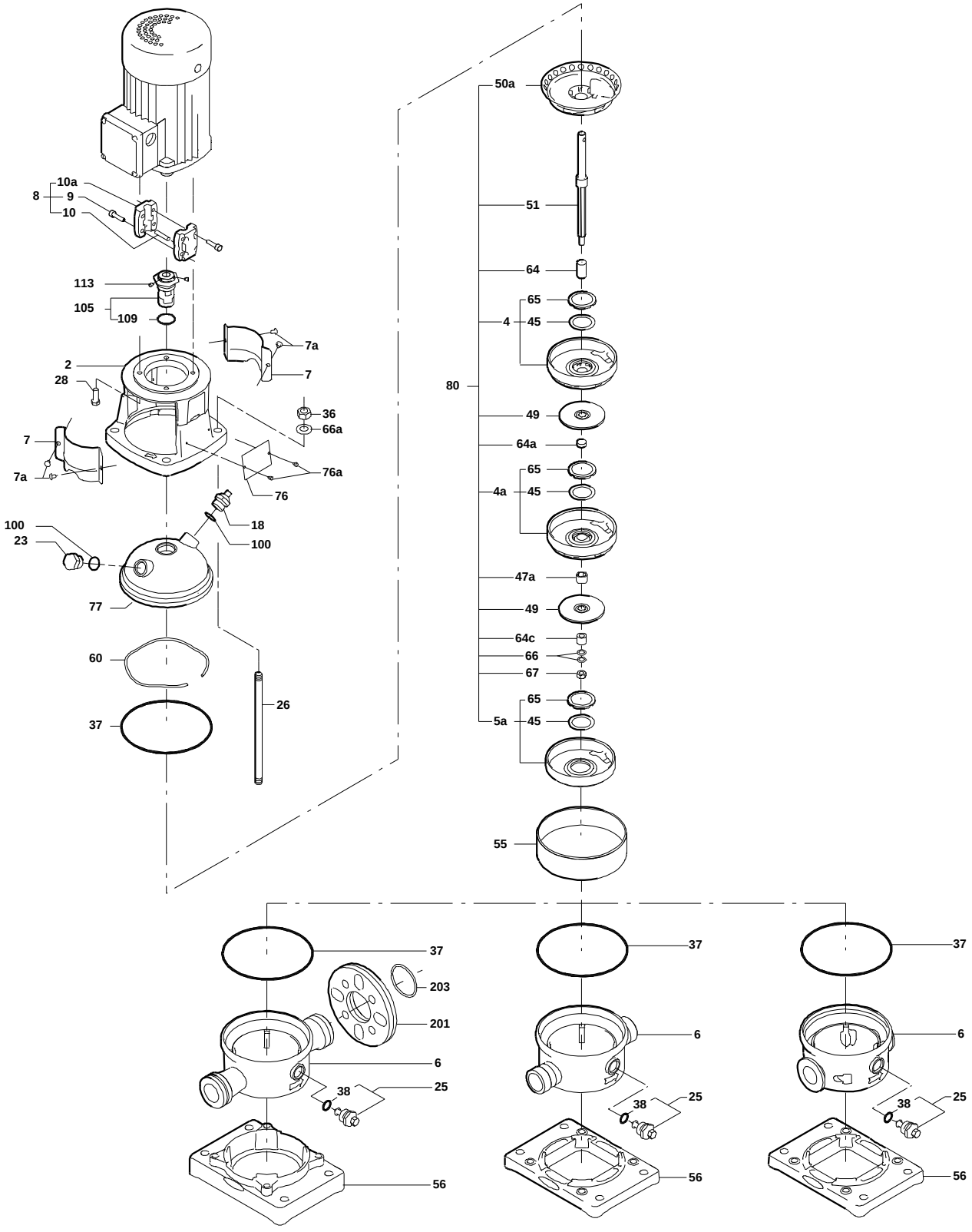

TM02

GRUNDFOS

Company name:
Created by:
Phone:

Date: 2/21/2018

Sectional drawing (TM02 0215 4100)

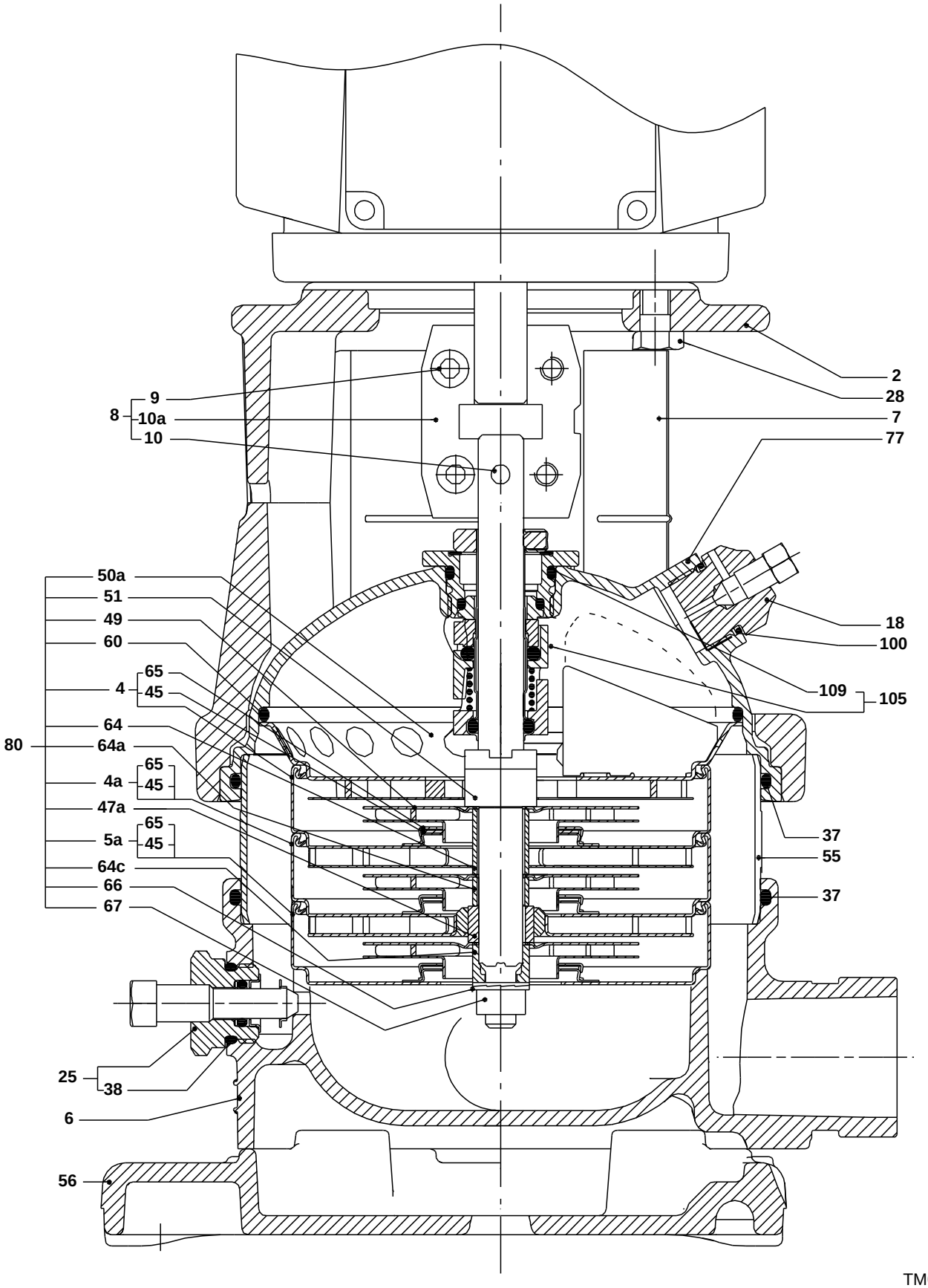

GRUNDFOS

Company name:
Created by:
Phone:

Date: 2/21/2018

Parts list CRN 3-8, Prod number 96083751
Valid from 1.1.2004 (0401)

	Position	Description	Annotation	Classification data	Part No.	Count	Unit
		Motor				1	pcs
-		Base cpl.				1	pcs
	6	Base				1	
	25	Plug				2	
	56	Base plate				1	
-		Sealing parts				1	pcs
-	25	Drain plug w/bypass valve				1	
	38	O-ring		Diameter: 16,3			
				Material type: EPDM			
				Thickness: 2,4			
	37	O-ring				2	
	100	O-ring		Diameter: 16,3		2	
				Material type: EPDM			
				Thickness: 2,4			
-	2	Pump head cpl.				1	pcs
	2	Motor stool				1	
	7	Coupling guard				2	
	7a	Thread cutting screw				4	
-	18	Air vent screw				1	
		Plug					
		Spindle					
-	25	Drain plug				1	
	23	Pipe plug					
	25	Drain plug					
	28	Hex head cap screw		Length: 25		4	
				Thread: UNC 3/8"			
	60	Formed wire spring				1	
	77	Pump cover				1	
+	8	Coupling cpl.				1	pcs
	26	Staybolt		Length: 241		4	pcs
				Thread: M12			
	36	Nut		Thread: M12		4	pcs
	55	Outer sleeve				1	pcs
	66a	Washer		Designation: DIN 125 A2		4	pcs
				Inner diameter: 13			
				Outer diameter: 24			
				Thickness: 2,5			
-	80	Chamber stack				1	pcs
-		Chamber cpl.				6	
	4a	Intermediate chamber					
	45	Neck ring					
	65	Neck ring retainer					
		Impeller cpl.				8	
-		Chamber w. bearing cpl.				1	
	4a	Intermediate chamber					
	45	Neck ring					
	65	Neck ring retainer					
-	5a	Chamber cpl.				1	
	4a	Intermediate chamber					
	45	Neck ring					
	65	Neck ring retainer					
	36	Lock nut		Thread: M8		1	
	47a	Bearing ring, rotating				1	

GRUNDFOS

Company name:
Created by:
Phone:

Date: 2/21/2018

	Position	Description	Annotation	Classification data	Part No.	Count	Unit
-	50a	Guide vane cpl.				1	
		Guide vane					
		Plate					
	50b	Top plate					
	51	Shaft, spline, cpl.				1	
	64a	Spacing pipe				6	
	64a	Spacing pipe		Inner diameter: 12,85		1	
				Outer diameter: 15,85			
				Length: 4,50			
	64c	Clamp, splined		Inner diameter: 8,5		1	
				Outer diameter: 15			
	66	Wedge lock washer				1	
-	105	Shaft seal		Material type: HQQE	1		pcs
		O-ring				1	
		O-ring				1	
		Seal driver, upper				1	
		Seal driver, lower				1	
		Spacer ring				1	
		Pipe				1	
		Plug				1	
		Plug				1	
		Compression spring				1	
		Socket set screw				1	
	102	O-ring		Diameter: 22,00		1	
				Material type: EPDM			
				Thickness: 2,75			
	103	Seal ring, stationary				1	
	105	Seal ring, rotating				1	
	107	O-ring				1	
	113	Driver				1	