Browning®

TorqTaper® Plus Helical Shaft Mount Speed Reducers Installation and Maintenance Manual

Emerson Industrial Automation

7120 New Buffington Road
Florence, KY 41042
Application Engineering: 800 626 2093
www.emerson-ept.com

FORM 9191 Revised June 2010

⚠ WARNING

- Read and follow all instructions carefully.
- Use lifting lug to lift gearbox.
- Disconnect and lock-out power before installation and maintenance. Working on or near energized equipment can result in severe injury or death.
- Do not operate equipment without guards in place. Exposed equipment can result in severe injury or death.
- Never lift the reducer by the input shaft. Lifting lug should only be used to lift the weight of the reducer. Do not use lifting lug to lift attached assemblies.
- Reducer shipped without oil. Fill to proper level before operation to avoid damage and/or personal injury. Do not use lubricants with anti-wear/extreme pressure additives in units with internal backstops - these additives decrease the backstops's ability to prevent reverse rotation and will result in backstop failure which could cause personal injury.

⚠ CAUTION

- Periodic inspections should be performed. Failure to perform proper maintenance can result in premature product failure and personal injury.
- All electrical work should be performed by qualified personnel and compliant with local and national electrical codes.



Hydraulic TorqTaper Plus



Shaft Mount TorqTaper Plus



C-Face TorqTaper Plus

Browning, Emerson, Emerson Industrial Automation and TorqTaper are trademarks of Emerson Electric Co. or one of its affiliated companies.
© 2006, 2008, 2009, 2010 Emerson Power Transmission, All Rights Reserved.
MCIM10014 • Form 9191 • Printed in USA

EMERSON™
Industrial Automation

Parts Included with Reducer

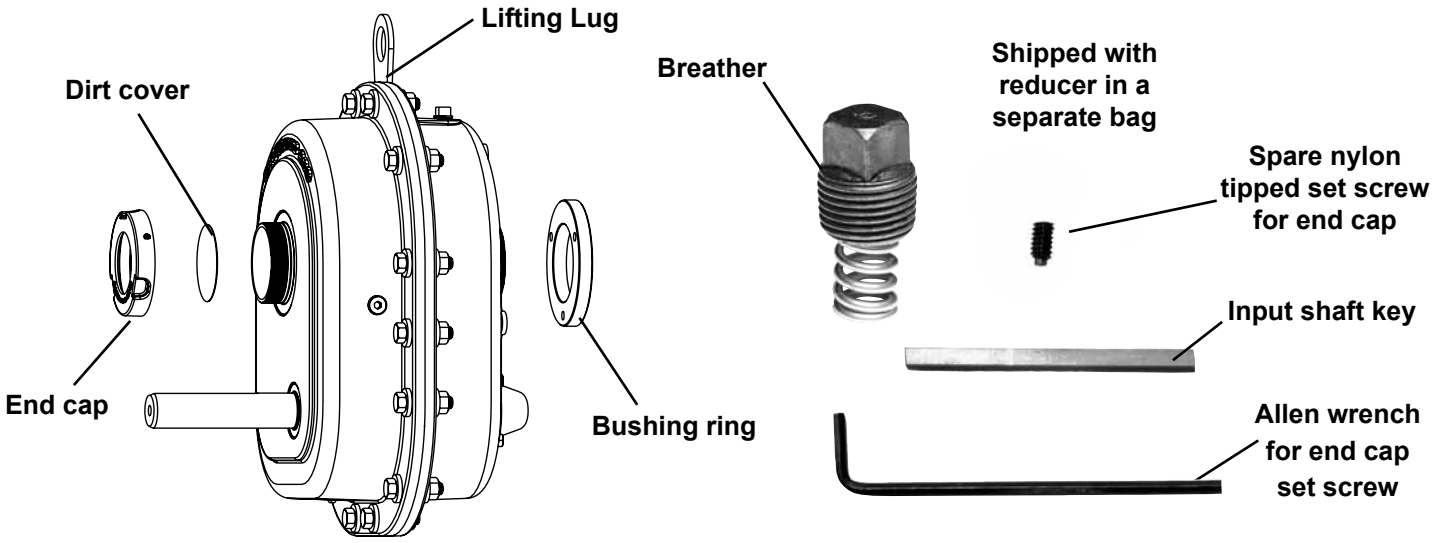

Note: Bushing ring, end cap and dirt cover are installed on the reducer prior to shipment.

Available TorqTaper Plus Accessory Kits

- **Torque Arm Kit**
- **Motor Mount Kit**
- **Tapered Bore Bushing Kit**
- **Vertical Shaft Mount Breather Kit**
- **Filtered Breather Kit**
- **Screw Conveyor Adaptor Kit**
- **Screw Conveyor Drive Shaft Kit**
- **Packing Gland Kit**
- **Waste Pack Kit**
- **Bushing Guard Kit**
- **Pump and Cooler Kit**
- **Belt Guard Kit**
- **Fan Kit**
- **Backstop Kit**

Table of Contents

Page No.

1. **Shaft Mount Reducer Installation Instructions** 3
   - 1.1 Reducer and Driven Shaft Preparation 3
   - 1.2 Determine Mounting Configuration 3
   - 1.3 Front Mounting Configuration with Stabilizer Ring 3
   - 1.4 Rear Mounting Configuration with Stabilizer Ring 4
   - 1.5 Rear Mounting Configuration without Stabilizer Ring 4
   - 1.6 Installation Instructions Finished Bore Model 5
2. **Lubrication Instructions** 5
   - 2.1 Oil Level 6
   - 2.2 Relubrication Maintenance Schedule 8
   - 2.3 Lubricant Selection 8
3. **Hydraulic and C-face Motor Mount Installation Instructions** 9
   - 3.1 Hydraulic Motor Mounting 9
   - 3.2 C-Face Motor Mounting 9
4. **Installation Checklist** 9
5. **Shaft Mount Removal Instructions** 9
   - 5.1 Bushed Bore Model 9
   - 5.2 Finished Bore Model 9
6. **Bolt Torque Specifications** 9
7. **Shaft Mount Terminology** 10

1. Shaft Mount Reducer Installation Instructions

For long service and dependable performance, a shaft mount reducer must be rigidly supported and accurately aligned. The following instructions are a step-by-step guide to meeting these requirements for a Browning® TorqTaper Plus shaft mounted reducer. If there is a need to vary from any of these installation instructions, contact the Emerson Power Transmission Application Engineering Department at 1-800-626-2093 before completing the installation.

CAUTION: Shaft mounted reducers use bushings to mount the reducer to various driven shaft sizes. When the driven shaft is smaller than the maximum bushing size for the reducer, check the driven shaft and key stresses per ANSI/ AGMA Std. 6001-D97 for the application.

1.1 Reducer and Driven Shaft Preparation

1.1.1 The driven shaft diameter is to be within the commercial tolerances for turned and polished round bars. The key and keyseat in the driven shaft are to be in accordance with commercial standards for size, depth, offset, lead and parallelism.

1.1.2 The driven shaft on which the reducer is to be mounted must be straight, clean and free of burrs.

1.1.3 Rotate the driven shaft on which the reducer is to be mounted so the shaft keyseat is in the upward position.

1.1.4 A lifting lug is provided to lift the reducer into position. The lifting lug may be repositioned onto any one of the housing flange bolts as required. After repositioning, all housing flange bolts must be reinstalled to the recommended torque. See bolt torque specifications section.

CAUTION: Do not apply grease, oil or an anti-seize compound to the taper bore of the reducer, barrel of the bushing, driven shaft or bushing bore. If any of these substances are applied, equipment failure and personal injury may result.

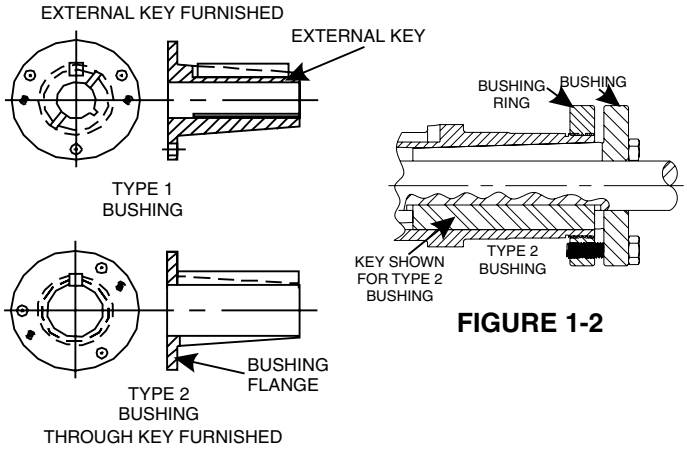

FIGURE 1-1

1.2 Determine Mounting Configuration - Bushed Bore Models

Due to its unique design, the Browning TorqTaper Plus shaft mounted reducer may be mounted to a driven shaft in a variety of configurations. The following instructions will help determine the correct mounting configuration based on the available driven shaft and key length.

1.2.1 Measure the available driven shaft length “H” (in inches) starting from the end of the driven shaft to the first obstruction or point of interference.

1.2.2 Measure the length of the available keyseat “K” in the driven shaft (in inches) starting from the end of the driven shaft to the end of the usable keyseat.

1.2.3 The following Sections - 1.3, 1.4 and 1.5, show the three standard mounting configurations for the Browning TorqTaper Plus shaft mounted reducer. Refer to the following sections in sequence to determine the optimum mounting configuration for the application.

Table 1–2 Shaft Diameter Tolerances for Inch Shafts

Shaft diameter, in	Maximum undersize variation, in[1]
To 1.50	0.004
Over 1.50 to 2.50	0.005
Over 2.50 to 4.00	0.006
Over 4.00 to 6.00	0.007
Over 6.00 to 8.00	0.008

Note:
[1]) Keys and keyways in supporting shaft should be in accordance with ANSI B17.1 for size, depth, offset, lead and parallelism.

1.2.4 Using the appropriate reducer size in the Tables 1-3, 1-4 and 1-5, compare the measured values for H and K to the tabulated values of H and K. If the measured values for H and K are greater than the tabulated values, the mounting configuration shown in the figure may be used. If the measured values for H and K are less than the tabulated values, proceed to the next figure and repeat this step.

Notice: If the measured values for H and K are less than the tabulated values shown in Table 1-5, contact the Emerson Power Transmission Application Engineering Department at 1-800-626-2093.

1.3 Front Mounting Configuration with Stabilizer Ring (107 through 315)

Figure 1-3
Front Mounting Configuration with Stabilizer Ring (107 through 315)

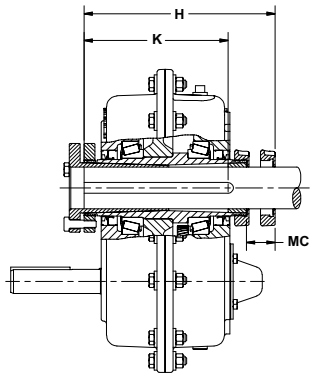

Table 1-3 Dimensions for Front Mounting Configuration with Stabilizer Ring (107 through 315)

Unit Size	MINIMUM CLEARANCE	MINIMUM SHAFT MOUNTING LENGTH	MINIMUM KEY CONNECTION LENGTH
	MC	H	K
107	0.97	8.06	3.69
115	1.03	8.59	3.88
203	1.15	9.78	4.32
207	1.21	10.16	4.81
215	1.31	11.36	5.25
307	1.44	13.04	6.31
315	1.69	15.20	7.38

1.3.1 On the input shaft side, thread the bushing ring onto the hollow quill until the bushing ring is flush with the end of the quill.

1.3.2 Place the endcap on the driven shaft with the threaded bore facing the end of the shaft. Slide the stabilizer ring on the driven shaft with the small end of the taper toward the end of the shaft.

1.3.3 Install Key(s)

Type 1 Bushing (2 Keys):

- Install the external bushing key into the bushing as shown in Fig 1-1 (External bushing key is supplied with the Bushing Kit)
- Install driven shaft key (customer supplied) into the driven shaft keyseat. Position the end of the driven shaft key even with the end of driven shaft. Retain this key to prevent movement.

1.3.4 Install Reducer

Type 1 Bushing

- Mount the reducer on the driven shaft with the bushing ring facing outward toward the end of the driven shaft.
- Locate the reducer on the driven shaft such that approximately .500 inch of the driven shaft extends out beyond the end of the reducer quill.
- Start the bushing (small end first) by aligning the keyway in the bushing with the key previously installed in the driven shaft.
- Continue moving the bushing into position and rotate the input shaft as required to align the external bushing key with the keyway in the reducer quill.
- Rotate the bushing ring clockwise to align the clearance holes in the bushing with the threaded holes in the bushing ring. (This will require less than ½ turn of the bushing ring).
- Install the bushing capscrews and hand tighten. Reposition the reducer until the end of the driven shaft is even with the end of quill.
- Slide the stabilizer ring into the reducer quill and thread the endcap on hand tight
- See bolt torque specifications section.
- Tighten the bushing capscrews evenly around the bushing flange to the recommended torque as shown in Table 6-1.
- Tighten the endcap again until hand tight. Tighten the set screw in the endcap to the recommended torque as shown in Table 6-1.

Type 2 Bushing

- Position the reducer on the driven shaft with the bushing ring facing out toward the end of the shaft.
- Move the reducer into position by rotating the input shaft as required to align the driven shaft key with the keyway in the reducer quill.
- Locate the reducer on the driven shaft such that approximately .500 inch of the driven shaft extends out beyond the end of the reducer quill.
- Start the bushing (small end first) by aligning the keyway in the bushing with the key previously installed in the driven shaft.
- Rotate the bushing ring clockwise to align the clearance holes in the bushing with the threaded holes in the bushing ring. (This will require less than ½ turn of the bushing ring).
- Install the bushing capscrews and hand tighten. Reposition the reducer until the end of the driven shaft is even with the end of quill.
- Slide the stabilizer ring into the reducer quill and thread the endcap on hand tight.
- Tighten the bushing capscrews evenly around the bushing flange to the recommended torque as shown in Table 6-1.
- Tighten the endcap again until hand tight. Tighten the setscrew in the endcap to the recommended torque as shown in Table 6-1.

Notice: The key length must be sufficient to engage the full length of the bushing. The shaft must engage the full length of the bushing.

Notice: There are three (3) series of bushing keys used in the Type 2 bushing system: rectangular, square and offset. In most cases, the key supplied will be rectangular or offset. Use caution when installing rectangular keys as some may visually appear to be square. The key should install in the bushing keyway with a sliding type fit. The key in the driven shaft keyseat should be retained to prevent movement.

WARNING! The capscrews must thread into the bushing ring and not the bushing. Threaded holes in the bushing are for removal only. If assembled incorrectly, equipment failure and personal injury may result.

1.4 Rear Mounting Configuration With Stabilizer Ring (107 through 800)

FIGURE 1-4
Rear Mounting Configuration With Stabilizer Ring (107 through 800)

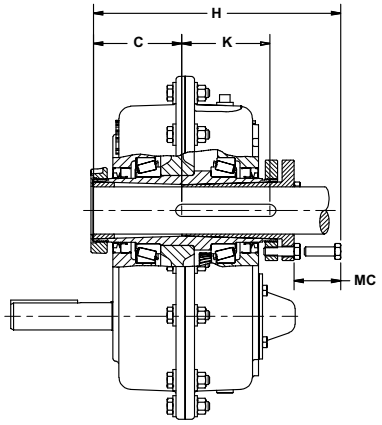

Table 1-4 Dimensions for Rear Mounting Configuration With Stabilizer Ring (107 through 800)

REDUCER SIZE	BOLT CLEARANCE	MINIMUM SHAFT MOUNTING LENGTH	MINIMUM KEY CONNECTION LENGTH	REMAINING SHAFT FOR STABILIZER RING
	MC	H	K	C
107	1.75	9.53	3.69	3.40
115	1.88	10.13	3.88	3.62
203	1.88	11.19	4.32	4.19
207	1.88	11.52	4.81	4.01
215	1.88	12.62	5.25	4.61
307	2.25	14.64	6.31	5.01
315	2.75	17.07	7.38	5.76
407	2.75	16.42	6.91	5.54
415	3.25	19.76	8.53	6.51
507	3.75	21.27	9.66	6.27
608	4.25	25.93	10.15	9.68
800	4.50	28.62	10.73	11.12

1.4.1 For Type 1 bushings which require an external key and a shaft key: Install the key (supplied with the bushing) in the external keyseat of the bushing as shown in Figure 1-1. Install a shaft key (not supplied) in the shaft keyseat and retain to prevent movement. Install the bushing on the shaft, flanged end first, align the bushing keyway with the shaft key and position the bushing over the key.

Notice: Key length must be sufficient to engage the full length of the bushing. The shaft must engage the full length of the bushing.

1.4.2 For Type 2 bushings which require one through key: Install the bushing on the shaft, flanged end first. Align the keyway in the bushing with the keyseat in the shaft and install the shaft key. Position the shaft key flush against the inside flange surface of the bushing. See Figure 1-2 Shaft Key and Bushing Location.

Notice: There are three (3) series of bushing keys used in the Type 2 bushing system: rectangular, square and offset. In most cases, the key supplied will be rectangular or offset. Use caution when installing rectangular keys as some may appear to be square. The key should install in the bushing keyway with a sliding type fit. The key in the shaft keyseat should be retained to prevent movement.

Notice: The shaft must engage the full length of the bushing.

1.4.3 On the side opposite of the input shaft, thread the bushing ring onto the hollow quill until the bushing ring is flush with the end of the hollow quill. Rotate the reducer input shaft to align the keyway in the hollow quill with the bushing/shaft key. Position the reducer on the shaft with the bushing ring toward the bushing.

1.4.4 Slide the stabilizer ring onto the driven shaft with the small end of the taper toward the reducer. Insert the stabilizer ring into the quill.

1.4.5 Thread the endcap and dirt cover (not used if driven shaft extends beyond the end of the hollow quill) onto the hollow quill until hand tight. Do not over tighten the endcap.

1.4.6 Rotate the bushing ring clockwise until the tapped holes align with the drilled holes in the bushing flange. Prior to tightening the capscrews, make sure the bushing key is as close as possible to the inside flange of the bushing as shown in Figure 1-2 and the bushing is positioned on the shaft as required in Table 1.4 Dimensions for rear mounting configuration with stabilizer ring.

1.4.7 Install the bushing capscrews and tighten all capscrews evenly around the bushing flange to the recommended torque as shown in Table 6-1.

1.4.8 Tighten the endcap again until hand tight. Tighten the setscrew in the endcap to the recommended torque as shown in Table 6-1.

WARNING! Capscrews must thread into the bushing ring and not the bushing. Threaded holes in the bushing are for removal only. If assembled incorrectly, equipment failure and personal injury may result.

1.5 Rear Mounting Configuration Without Stabilizer Ring (107 through 800)

FIGURE 1-5
Rear Mounting Configuration Without Stabilizer Ring (107 through 800)

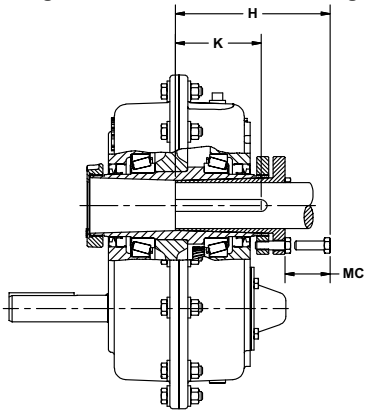

Table 1-5 Dimensions for Rear Mounting Configuration

REDUCER SIZE	BOLT CLEARANCE	MINIMUM SHAFT MOUNTING LENGTH	MINIMUM KEY CONNECTION LENGTH
	MC	H	K
107	1.75	6.12	3.69
115	1.88	6.50	3.88
203	1.88	7.00	4.32
207	1.88	7.50	4.81
215	1.88	8.00	5.25
307	2.25	9.63	6.31
315	2.75	11.31	7.38
407	2.75	10.88	6.91
415	3.25	13.25	8.53
507	3.75	15.00	9.66
608	4.25	16.25	10.15
800	4.50	17.50	10.73

1.5.1 For Type 1 bushings which require an external key and a shaft key: Install the key (supplied with the bushing) in the external keyseat of the bushing as shown in Figure 1-1. Install a shaft key (not supplied) in the shaft keyseat and retain to prevent movement. Install the bushing on the shaft, flanged end first, align the bushing keyway with the shaft key and position the bushing over the key.

Notice: The key length must be sufficient to engage the full length of the bushing. The shaft must engage the full length of the bushing.

1.5.2 For Type 2 bushings which require one through key: Install the bushing on the shaft, flanged end first. Align the keyway in the bushing with the keyseat in the shaft and install the shaft key. Position the shaft key flush against the inside flange surface of the bushing. See Figure 1-2 shaft key and bushing location.

Notice: There are three (3) series of bushing keys used in the Type 2 bushing system: rectangular, square and offset. In most cases, the key supplied will be rectangular or offset. Use caution when installing rectangular keys as some may appear to be square. The key should install in the bushing keyway with a sliding type fit. The key in the shaft keyseat should be retained to prevent movement.

Notice: The shaft must engage the full length of the bushing.

1.5.3 On the side opposite of the input shaft, thread the bushing ring onto the hollow quill until the bushing ring is flush with the end of the hollow quill. Rotate the reducer input shaft to align the keyway in the hollow quill with the bushing/shaft key. Position the reducer on the shaft with the bushing ring toward the bushing.

1.5.4 Thread the endcap and dirt cover onto the hollow quill until it bottoms out. Tighten the setscrew to the recommended torque as shown in Table 6-1. Do not overtighten.

1.5.5 Rotate the bushing ring clockwise until the tapped holes align with the drilled holes in the bushing flange. Prior to tightening the capscrews, make sure the bushing key is as close as possible to the inside flange of the bushing as shown in Figure 1-2 and the bushing is positioned on the shaft as required in Table 1-4 dimensions for rear mounting configuration with stabilizer ring.

Install the bushing capscrews and tighten all capscrews evenly around the bushing flange to the recommended torque as shown in Table 6-1.

1.6 Installation Instructions Finished Bore Model

1.6.1 The shaft on which the reducer is to be mounted must be straight, clean and free of burrs. Lubricate the shaft to ease the mounting of the reducer. (Anti-fretting grease is recommended for finished bore only.) A lifting lug is provided to lift the reducer into position.

Figure 1-6A

Finished Bore Bushing With Bushing Kit (107 through 315)

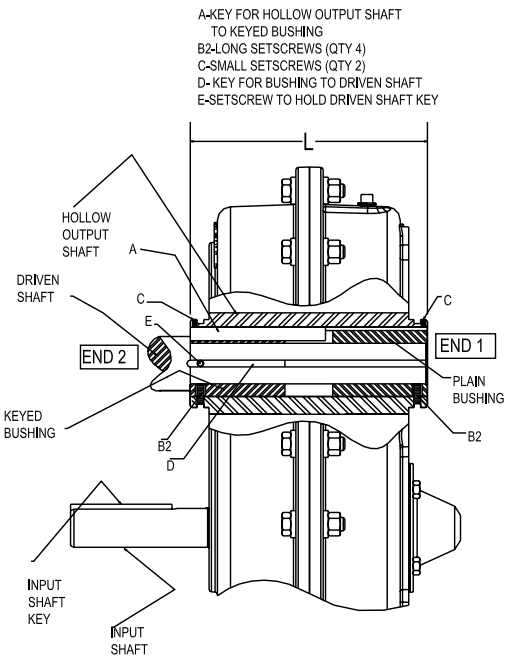

WARNING! Straight bushing kits adapt the gearbox to smaller shafts, which increases the stress on the shaft and the key. To avoid possible damage to the gearbox and attached equipment, the driven shaft and key must be designed in accordance with ANSI/AGMA 6001-D97.

1.6.2 Installation with Finished Bore Bushing Kit

The following items are included with the Finished Bore Bushing Kit:

- One - keyed bushing
- One - plain bushing (no keyways)
- Four - long setscrews
- One - key for connection of keyed bushing to driven shaft
- One - setscrew for holding key to driven shaft

Refer to Figure 1-6A for illustrations of where each of these items are used.

1.6.2.1 The shaft on which the reducer is to be mounted must be straight, clean and free of burrs. Lubricate the shaft to ease the mounting of the reducer. (Anti-fretting grease is recommended for finished bore only.) A lifting lug is provided to lift the reducer into position.

1.6.3 Installation Finished Bore with Bushing Kit

1.6.3.1 Refer to Figure 1-6A "Finish Bore with Bushing Kit" for the following procedure.

Install the key "D" in driven shaft with the end of key against the shoulder on the driven shaft. If there is no shoulder, position this end of the key a distance L from end 1 (value of L from Table 1-6A).

1.6.3.2 Place the keyed bushing on the driven shaft with the setscrews near end 2 and move the keyed bushing against the driven shaft shoulder or a distance L from end 1.Tighten the setscrew "E" to hold the keyed bushing and key in place.

1.6.3.3 Install the key "A" in the keyseat on the outside of the keyed bushing. The end of this key should be even with the end of the keyed bushing at end 2 (This key is shipped with the gearbox, not in the bushing kit).

1.6.3.4 Rotate the input shaft until the keyway in the hollow output shaft is aligned with the key "A", then move the gearbox into position with end of the hollow output shaft against shoulder on driven shaft.

1.6.3.5 Align the clearance holes in the plain bushing with the setscrews in the hollow output shaft. Remove the four setscrews from the hollow output shaft. Insert the plain bushing into the hollow output shaft until the end of the bushing is even with the end of the hollow output shaft at end 1.

1.6.3.6 Remove setscrew "C" on end 1. Tighten setscrew "C" on end 2 to torque as shown in Table 1-6B. Insert the four setscrews that came in bushing kit (shown as "B2"). Confirm that these 4 setscrews are through the bushings and pressing on the driven shaft, then tighten these 4 setscrews to torque as shown in Table 1-6B.

1.6.4 Installation Finished Bore without Bushing Kit

Refer to Figure 1-6B "Finish Bore No Bushings" for the following procedure.

Figure 1-6B

Finished Bore Bushing Without Bushing Kit (107 through 315)

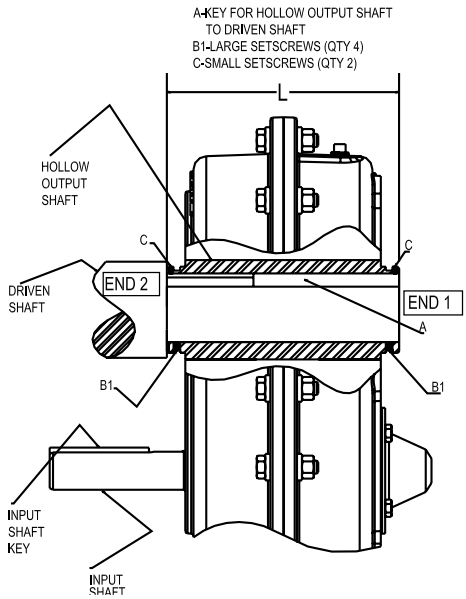

1.6.4.1 Insert the key into the driven shaft with the end of the key even with the end of the hollow output shaft at end 1.

1.6.4.2 Rotate the input shaft until the keyway in the hollow output shaft is aligned with the key in the driven shaft, then slide the gearbox on the shaft until the hollow output shaft is against the shoulder on the driven shaft. If the driven shaft has no shoulder, position the gearbox with the end of the driven shaft even with the end of the hollow output shaft at end 1.

1.6.4.3 Tighten the setscrew "C" at end 1 to the torque as shown in Table 1-6B.

1.6.4.4 Remove the setscrew "C" at end 2.

1.6.4.5 Tighten the four setscrews "B1" to torque as shown in Table 1-6B.

Table 1-6A

Reducer Size	Minimum Shaft Length "L"
107	6.52
115	7.13
203	8.45
207	8.77
215	10.25
307	11.7
315	13

Table 1-6B

Setscrew Size (Dia.)	Tightening Torque (in-lbs)
#8 (.164)	20
#10 (.190)	33
1/4 (.250)	87
3/8 (.375)	288
1/2 (.500)	624

2. Lubrication Instructions

Browning TorqTaper Plus reducers are shipped without oil. Before operating, the reducer must be filled with oil to the proper level to avoid equipment and/or personal injury. Do not use oils containing EP additives when a backstop is to be used.

Petroleum based mineral lubricants or synthetic lubricants can be used in Browning TorqTaper Plus reducers. Synthetic lubricants can extend oil change intervals to as much as 8,000 to 10,000 hours based on operating temperatures and lubricant contamination. If temperatures vary by season, the oil should be changed to suit the ambient operating temperature.

Refer to Tables 2-3A and 2-3B to determine proper AGMA viscosity grade oil based on the reducer's ambient operating temperature. Contact a lubrication manufacturer's representative for assistance in choosing a lubricant.

Notice: TorqTaper seals are grease-packed at assembly. Some purging of grease from around the rotating flingers during initial hours of operation is normal and should be expected.

WARNING! Reducer shipped without oil. Fill to proper level before operation to avoid damage and/or personal injury. Do not use lubricants with anti-wear/extreme pressure additives in units with internal backstops - these additives decrease the backstop's ability to prevent reverse rotation and will result in backstop failure which could cause personal injury.

Browning TorqTaper Plus reducers may be operated in the horizontal or vertical mounting position

When mounting reducer in the vertical mounting position, a Vertical Breather Kit is required.

Vertical Breather Kit for SMTP 107-800, Browning Part Number 107-800 SMTP VBK

2.1 Oil Level

2.1.1 Shaft mount reducers require different amounts of oil in the various mounting positions. For the convenience of having enough oil at the installation site, Tables 2-2A and 2-2B show the approximate amounts of oil needed for each common mounting position.

2.1.2 Figures 2-1A and 2-1B show breather, magnetic drain and oil level plug locations for the four standard horizontal mounting positions. Figures 2-2A and 2-2B show breather, magnetic drain and oil level plug locations for the two standard vertical mounting positions. The breather is installed in the fill hole in the top and the magnetic drain plug is installed in the bottom of the reducer in its relative position. In the horizontal mounting position use oil level "A" for speeds at or below those shown in Table 2-1. Use oil level "B" for speeds above those shown in Table 2-1. For reducers mounted in other positions, refer to steps 2.1.4 or, if the reducer is to be installed with the input shaft in the vertical position, refer to the Vertical Breather Kit instructions.

When Browning TorqTaper Plus reducers operate in areas with a dusty atmosphere, a Filtered Breather Kit is recommended.

Filtered Breather Kit for SMTP 107-800, Browning Part Number 107-800 SMTP FBK.

Figure 2-1A
Oil Levels A and B, Drain and Breather Locations (107 through 608)

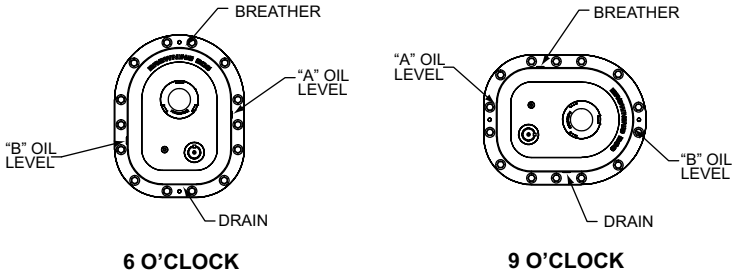

Figure 2-1B
Oil Levels A and B, Drain and Breather Locations (800 only)

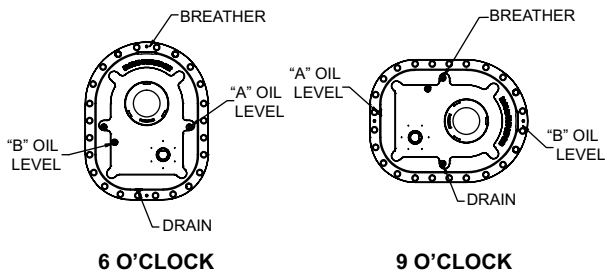

Figure 2-2 A
Vertical Mount Oil levels, Drain and Breather Locations (107 through 608)

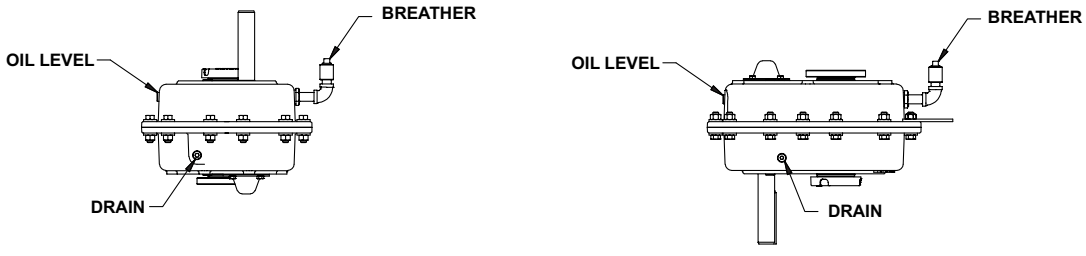

Figure 2-2 B
Vertical Mount Oil levels, Drain and Breather Locations (800 only)

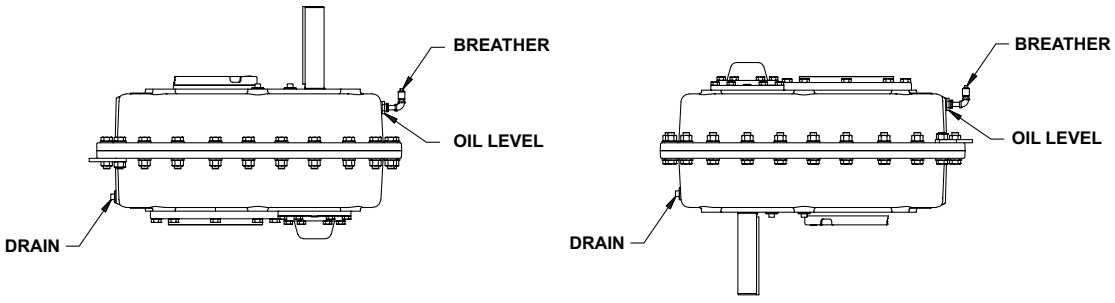

INPUT SHAFT UP **INPUT SHAFT DOWN**

Table 2-1 Use Oil Level "B" for Speeds Above Those Shown Below

REDUCER SIZE	OUTPUT RPM FOR REDUCER RATIOS				
	5:1	9:1	15:1	25:1	35:1
107	400	184	120	70	40
115	382	173	120	70	40
203	326	128	113	70	40
207	275	112	99	70	40
215	236	97	85	70	40
307	204	90	79	70	40
315	202	85	62	70	40
407	176	-	63	55	-
415	156	-	53	46	-
507	-	-	47	41	-
608	-	-	46	40	-
800	-	-	-	40	-

2.1.3 To fill reducer with oil, remove the proper oil plug and breather. Fill with oil through the breather hole until oil begins to run out of the oil level hole. Replace the oil level plug and install breather as shown in Figures 2-1 and 2-2.

CAUTION: Petroleum based and synthetic lubricants which contain anti-wear/extreme pressure additives must not be used in units with internal backstops. These additives decrease the backstop's ability to prevent reverse rotation. Consequently, backstop failure will occur.

2.1.4 Operating positions may vary as much as 10° from the four positions shown in Figure 2-1 and still have adequate oil by using the indicated oil levels. If it is necessary to vary the operating position less than 10° from these positions, complete the following steps. For reducers operating more than 10° from standard position, contact the Emerson Power Transmission Application Engineering Department at 800-626-2093.

WARNING! See torque arm installation instructions section before releasing the torque arm.

2.1.4.1 Release the torque arm.

2.1.4.2 Rotate the reducer to the nearest of these standard positions.

2.1.4.3 Fill to the proper level.

2.1.4.4 Replace oil level plug.

2.1.4.5 Rotate the reducer back to its operating position and reconnect the torque arm.

Notice: Reducers operating other than standard position should have a stand pipe or sight glass installed and marked at proper oil level in order to monitor oil level while in operating position. Contact the Emerson Power Transmission Application Engineering Department for assistance in selecting and installing required components.

Table 2-2 A
Approximate Oil Capacities in Quarts – Horizontal Input Shaft

Output Orientation	Horizontal															
Ratio	5:1								9,15, 25, 35:1							
Oil Level	A				B				A				B			
Mounting Position	3	6	9	12	3	6	9	12	3	6	9	12	3	6	9	12
107	2.0	2.0	2.5	2.0	1.0	1.0	1.5	1.5	2.0	2.0	2.0	2.0	1.0	1.0	1.5	1.5
115	3.0	3.0	3.0	3.0	1.5	2.0	2.0	2.0	3.0	3.0	3.0	3.0	1.5	2.0	2.0	2.0
203	5.0	5.0	6.0	5.0	2.5	3.0	3.5	3.5	4.5	4.5	5.5	5.0	2.5	3.0	3.5	3.5
207	6.5	7.0	7.5	7.0	3.0	4.0	4.5	4.5	6.0	6.5	7.5	7.0	3.0	4.0	4.5	4.5
215	9.0	10.0	11.5	10.5	4.0	5.5	7.0	6.0	8.0	9.0	11.0	10.0	4.0	5.0	7.0	6.0
307	13.0	13.5	13.0	14.0	9.5	8.5	10.0	9.5	12.0	12.5	12.5	14.0	9.5	8.0	10.0	9.5
315	16.5	19.5	16.5	17.5	12.5	12.5	13.0	11.0	15.0	18.0	16.0	17.0	12.0	11.5	13.0	11.0
407	19.5	20.5	24.5	19.5	8.5	12.5	13.5	13.0	16.5	17.5	22.5	20.0	8.0	10.5	14.0	13.0
415	33.0	35.0	40.0	35.0	15.5	21.0	24.0	22.0	28.0	31.0	37.5	34.0	14.5	18.0	24.5	22.0
507	-	-	-	-	-	-	-	-	38.5	40.5	53.0	49.5	20.0	23.5	35.0	33.0
608	-	-	-	-	-	-	-	-	55.0	63.5	65.5	68.5	40.5	37.0	50.5	42.5
800	-	-	-	-	-	-	-	-	82.0	90.0	96.0	100.0	66.0	62.5	80.0	100.0

Table 2-2 B
Approximate Oil Capacities in Quarts – Vertical Input Shaft

Output Orientation Ratio Mounting Position	Vertical			
	5:1		9,15, 25, 35:1	
	Input Shaft Up	Input Shaft Down	Input Shaft Up	Input Shaft Down
107	2.5	2.5	2.5	2.5
115	3.5	4.0	3.5	4.0
203	6.0	7.0	6.0	7.0
207	8.5	9.0	8.5	9.0
215	13.0	12.5	12.0	12.0
307	20.0	20.5	19.0	19.5
315	26.5	26.5	25.0	25.5
407	29.5	29.5	27.0	27.0
415	49.5	52.0	45.5	48.0
507	-	-	63.5	67.5
608	-	-	92.0	97.0
800	-	-	151.0	154.0

2.2 Relubrication Maintenance Schedule

2.2.1 Regularly Scheduled Oil Changes

Refer to Tables 2-3A to determine proper AGMA viscosity grade oil based on the reducer's ambient operating temperature.

2.2.2 Petroleum Based Mineral Lubricants – Under normal operating conditions oil should be changed every 2,500 hours or six months, whichever occurs first. If temperatures vary by season, the oil should be changed to suit the ambient operating temperature.

2.2.3 Synthetic Lubricants – Some types of synthetic lubricants can be used in shaft mount reducers. These lubricants can extend oil change intervals to as much as 8,000 to 10,000 hours based on operating temperatures and lubricant contamination. If temperatures vary by season, the oil should be changed to suit the ambient operating temperature.

CAUTION: Certain mineral oils and synthetics are not compatible. Please contact the lubricant supplier for information regarding lubricant miscibility and proper cleansing procedures.

WARNING! Petroleum-based and synthetic lubricants which contain anti-wear/extreme pressure additives must not be used in units with internal backstops. These additives decrease the backstop's ability to prevent reverse rotation and will result in backstop failure.

2.3 Lubricant Selection

Table 2-3 A

AGMA Oil Viscosity Grades for Ambient Operating Temperatures between 14 deg F and 49 deg F												
Output RPM	Reducer Size											
	107_MTP	115_MTP	203_MTP	207_MTP	215_MTP	307_MTP	315_MTP	407SMTP	415SMTP	507SMTP	608SMTP	800SMTP
5-20	5	5	5	5	5	5	5	5	5	5	5	5
21-40	5	5	5	5	5	5	5	5	5	5	5	5
41-60	5	5	5	5	5	5	5	5	5	5	5	5
61-80	5	5	5	5	5	5	5	5	5	5	5	5
81-100	5	5	5	5	5	5	5	5	5	5	5	
101-120	5	5	5	5	5	5	5	5	5	5	5	
121-140	5	5	5	5	5	5	5	5	5			
141-160	5	5	5	5	5	5	5	5	5			
161-180	5	5	5	5	5	5	5	5	5			
181-200	5	5	5	5	5	5	5	5	5			
201-220	5	5	5	5	5	5	5	5	4			
221-240	5	5	5	5	5	5	5	4	4			
241-260	5	5	5	5	5	5	4	4	4			
261-280	5	5	5	5	5	5	4	4	4			
281-300	5	5	5	5	5	4	4	4	4			
301-320	5	5	5	5	4	4	4	4	4			
321-340	5	5	5	5	4	4	4	4	4			
341-360	5	5	5	5	4	4	4	4	4			
361-380	5	5	5	4	4	4	4	4	4			
381-400	5	5	5	4	4	4	4	4	4			

Table 2-3 B

AGMA Oil Viscosity Grades for Ambient Operating Temperatures between 50 deg F and 95 deg F												
Output RPM	Reducer Size											
	107_MTP	115_MTP	203_MTP	207_MTP	215_MTP	307_MTP	315_MTP	407_SMTP	415_SMTP	507_SMTP	608_SMTP	800_SMTP
5-20	6	6	6	6	6	6	6	6	6	6	6	6
21-40	6	6	6	6	6	6	6	6	6	6	6	6
41-60	6	6	6	6	6	6	6	6	6	6	6	6
61-80	6	6	6	6	6	6	6	6	6	6	6	6
81-100	6	6	6	6	6	6	6	6	6	6	6	
101-120	6	6	6	6	6	6	6	6	6	6	6	
121-140	6	6	6	6	6	6	6	6	6			
141-160	6	6	6	6	6	6	6	6	6			
161-180	6	6	6	6	6	6	6	6	6			
181-200	6	6	6	6	6	6	6	6	6			
201-220	6	6	6	6	6	6	6	6	5			
221-240	6	6	6	6	6	6	6	5	5			
241-260	6	6	6	6	6	6	5	5	5			
261-280	6	6	6	6	6	6	5	5	5			
281-300	6	6	6	6	6	5	5	5	5			
301-320	6	6	6	6	5	5	5	5	5			
321-340	6	6	6	6	5	5	5	5	5			
341-360	6	6	6	6	5	5	5	5	5			
361-380	6	6	6	5	5	5	5	5	5			
381-400	6	6	6	5	5	5	5	5	5			

3. Hydraulic and C-face Motor Mount Installation Instructions

3.1.1 Before installing the hydraulic motor, measure dimensions A , B, and spline length (SL) on the hydraulic motor. (See Figure 3-1).

Three conditions must be met:

Condition 1: Dimension A on the motor must be less than the A1 as shown in Table 3-1.

CAUTION: Failure to meet this condition will damage the hydraulic motor, the gearbox, or both.

Condition 2:

Dimension B measured from the motor must be less than the B1 value shown in Table 3-1.

CAUTION: Failure to meet this condition will damage the hydraulic motor, the gearbox, or both. (Important: Dimension B is to the location where the spline tooth is full depth see Figure 3-1).

Condition 3:

Subtract spline length (SL) from motor dimension A. The result of this calculation must be greater than dimension B1 shown in Table 3-1.

CAUTION: Failure to meet this condition reduces the length of spline engagement and will cause early spline failure.

3.1.2 Lubricate the splined motor shaft with a non-fretting grease. Pre-assemble the hydraulic motor to the gearbox and hand-tighten the bolts holding the motor. There must be zero gap between the motor flange and the gearbox flange.

CAUTION: Failure to meet this condition will damage the hydraulic motor, the gearbox, or both.

3.1.3 Tighten the motor bolts to the torque recommended by the motor's manufacturer.

Figure 3-1.
Hydraulic Motor Spline Length

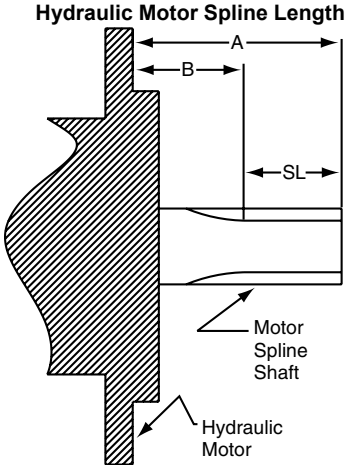

Table 3-1 Hydraulic Motor Spline Data

	6B		9T		13T		14T	
	A1	B1	A1	B1	A1	B1	A1	B1
107	2.38	0.78	1.89	0.58	-	-	-	-
115	2.36	0.76	1.87	0.56	2.15	0.9	-	-
203	2.37	0.68	1.98	0.73	2.12	0.87	2.92	1.15
207	2.41	0.72	-	-	2.16	0.91	2.91	1.14
215	2.39	0.64	-	-	2.1	0.85	2.94	1.05
307	2.43	0.68	-	-	-	-	2.98	1.09
315	2.5	0.75	-	-	-	-	3.05	1.16

3.2 C-Face Motor Installation Instructions

3.2.1 Gearboxes designed for C-face installations are supplied with an anti-fretting plastic quill liner. Do not use any lubrication on the shaft or this insert.

3.2.2 Align the key slot in the plastic quill liner with the keyway in the reducer's input shaft.

3.2.3 Insert the plastic quill liner into the reducer's input shaft until the flange on the quill liner snaps into the groove in the input shaft.

3.2.4 Place the motor key in the motor shaft and assemble the motor to the gearbox by hand tightening the motor bolts. There must be zero gap between the motor flange and the gearbox flange.

CAUTION: Failure to meet this condition will damage the electric motor, the gearbox, or both

3.2.5 Tighten mounting bolts to motor manufacturers torque specification.

4. Installation Checklist

- ✓ Make sure the input shaft rotates properly prior to starting drive.
- ✓ Never use oils of the EP (extreme pressure) type or those which contain slippery additives, if an internal backstop has been installed.
- ✓ Make sure the reducer is filled with correct lubricant and quantity.
- ✓ Make sure all drive guards are in place.
- ✓ Breather location
- ✓ Torque arm or anti-rotation device

5. Shaft Mount Removal Instructions

Carefully support the reducer by lifting lug. (Lifting lug should only be used to lift the weight of the reducer. Do not use the lifting lug to lift the attached assemblies to avoid overloading the lifting lug).

5.1 Bushed Bore Model

5.1.1 Front Mounting Configuration with Stabilizer Ring 107-315 (see Figure 1-3)

5.1.1.1 Loosen the setscrew in the endcap. Remove the endcap from the output quill.

5.1.1.2 Remove the capscrews from the bushing and install them in the tapped holes in the bushing flange.

5.1.1.3 Tighten the capscrews uniformly until the reducer releases from the bushing taper.

5.1.1.4 Remove the reducer from the shaft.

Notice: A slight rocking movement may be required to release the unit from the stabilizer ring, if used.

5.1.2 Rear Mounting Configuration with Stabilizer Ring 107-800 (see Figure 1-4)

Notice: When removing a reducer mounted in the rear mounting configuration with stabilizer ring, make sure the stabilizer ring is removed before removing the reducer.

5.1.2.1 Loosen the setscrew in the endcap. Remove the endcap from the output quill.

5.1.2.2 Remove the capscrews from the bushing and install them in the tapped holes in the bushing flange.

5.1.2.3 Tighten the capscrews uniformly until the reducer releases from the bushing taper.

5.1.2.4 Remove the reducer from the shaft.

Notice: A slight rocking movement may be required to release the unit from the stabilizer ring, if used.

5.2 Finished Bore Model 107-315 (see Figures 1-6A and 1-6B)

5.2.1 Remove the setscrews in the output shaft.

5.2.2 Remove the reducer from the shaft.

6. Bolt Torque Specifications

Table 6-1 Bolt Tightening Torques

REDUCER SIZE	HOUSING FLANGE GRADE 5		TORQTAPER BUSHING		ENDCAP SETSCREW NYLON TIPPED	
	BOLT SIZE.	FT. LBS.	BOLT SIZE.	FT. LBS.	SETSCREW SIZE	IN-LBS.
107	5/16-18	16	5/16-18	16	1/4-20	60
115	3/8-16	25	3/8-16	29	1/4-20	60
203	7/16-14	40	3/8-18	29	1/4-20	60
207	1/2-13	65	3/8-16	29	1/4-20	60
215	1/2-13	65	3/8-16	29	1/4-20	60
307	5/8-11	125	1/2-13	70	1/4-20	60
315	5/8-11	125	1/2-13	70	1/4-20	60
407	5/8-11	125	1/2-13	70	3/8-16	200
415	3/4-10	220	5/8-11	140	3/8-16	200
507	3/4-10	220	3/4-10	250	3/8-16	200
608	3/4-10	220	3/4-10	250	3/8-16	200
800	1-8	525	7/8-9	400	3/8-16	200

7. Shaft Mount Terminology

TERMS	DEFINITION
Backstop	A device that is used to prevent reverse rotation up to a specified torque limit and rotational speed. Also known as a clutch.
Bushing	A component that is used to adapt the shaft mounted reducer to various driven shaft sizes.
Bushing ring	A ring mounted on the output quill that is used to attach the bushing to the shaft mounted reducer.
Endcap	A ring mounted on the output quill that retains the stabilizer ring and/or the dirt cover.
Inner race	The inside part of the backstop that fits over the input shaft extension.
Overhung load	An external load applied to a shaft. Overhung loads are usually a result of torsional loads, but other loads such as component weights can contribute to the total amount of overhung load.
Packing gland	A material similar to rope that is commonly used in screw conveyor applications as a sealing device.
Quill	A shaft with a bore that extends from end to end. A hollow shaft.
Screw conveyor	A material transporting device typically designed with a screw-like shaft that rotates inside a fixed trough or tube.
Seal	A metal shell with a lip that is used to help retain oil and help keep dirt and debris from entering the shaft mount reducer.
Sheave	Drive component typically mounted on the input shaft and used with a v-belt to transmit power from a motor to the shaft mount reducer. Also known as a pulley.
Snap ring	Metal ring used to hold accessories, like the backstop inner race, in a certain location. Also known as a retaining ring.
Stabilizer ring	A ring that is placed in the quill on the opposite side of the bushing to provide two mounting points for the shaft mount reducer.
Taconite	An iron ore dust created in the processing of iron.
Thrust	Internal or external force applied along the centerline axis of a shaft.
Torque arm	A device used to counteract the torsional loads created by the shaft mount reducer.
V-ring	A sealing device that mounts on a shaft and seals against a counterface. Also known as a v-seal or flinger.
Waste pack	A material similar to wool fibers that is commonly used in screw conveyor applications as a sealing device.

Notes:

Browning, Emerson, Emerson Industrial Automation and TorqTaper are trademarks of Emerson Electric Co. or one of its affiliated companies.
© 2006, 2008, 2009, 2010 Emerson Power Transmission, All Rights Reserved.
MCIM10014 • Form 9191 • Printed in USA

EMERSON
Industrial Automation