Performance Mounted Ball Bearings

SEALMASTER®



Duty: Standard
Rolling Elements: Ball
Lock: Setscrew
Seal: Felt
Optional Seal: Contact
Temperature: -20° to 220°F

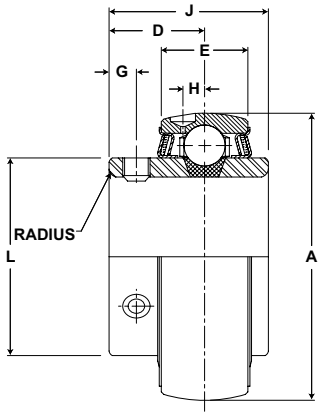

Standard Duty Bearing Insert – Setscrew

Bore Diameter		Part No.	Basic Dynamic Rating lb/N	Dimensions inch / mm							Max Rad. To Clear	Setscrew Thread	Unit Wt. lb/kg
inch	mm			A	D	E	G	H	J	L			
1/2 9/16 5/8 11/16 3/4	20	2-08 2-09 2-010 2-011 2-012 5204	2611 11614	1.8504 47	23/32 18.3	5/8 15.9	3/16 4.8	1/8 3.2	1 7/32 31.0	1 3/16 30.2	.040 1.02	1/4-28	.5 .23
13/16 7/8 15/16 1	25	2-013 2-014 2-015 2-1 5205	2801 12459	2.0472 52	13/16 20.6	11/16 17.5	7/32 5.6	11/64 4.4	1 3/8 34.9	1 3/8 34.9	.040 1.02	1/4-28	.6 .27
1 1/16 1 1/8 1 3/16 1 1/4	30	2-11 2-12 2-13 1-14 5206	4381 19487	2.4409 62	7/8 22.2	7/8 22.2	7/32 5.6	7/32 5.6	1 1/2 38.1	1 19/32 40.5	.040 1.02	1/4-28	1.0 .45
1 1/4 1 5/16 1 3/8 1 7/16	35	2-14 2-15 2-16 2-17 5207	5782 25718	2.8316 72	1 25.4	15/16 23.8	1/4 6.4	1/4 6.4	1 11/16 42.9	1 55/64 47.2	.040 1.02	5/16-24	1.5 .68
1 1/2 1 9/16	40	2-18 2-19 5208	7340 32648	3.1490 80	1 3/16 30.2	1 3/32 27.8	5/16 7.9	19/64 7.5	1 15/16 49.2	2 1/16 52.4	.062 1.57	5/16-24	1.9 .86
1 5/8 1 11/16 1 3/4	45	2-110 2-111 2-112 5209	7901 35144	3.3465 85	1 3/16 30.2	1 3/32 27.8	5/16 7.9	19/64 7.5	1 15/16 49.2	2 19/64 58.3	.062 1.57	5/16-24	2.2 1.00
1 13/16 1 7/8 1 15/16 2	50	2-113 2-114 2-115 1-2 5210	7889 35090	3.5433 90	1 9/32 32.5	1 1/8 28.6	3/8 9.5	17/64 6.7	2 1/32 51.6	2 15/32 62.7	.062 1.57	3/8-24	2.4 1.09
2 2 1/8 2 3/16	55	2-2 2-22 2-23 5211	9752 43377	3.9370 100	1 5/16 33.3	1 3/16 30.2	3/8 9.5	19/64 7.5	2 3/16 55.6	2 23/32 69.1	.080 2.03	3/8-24	2.8 1.27
2 1/4 2 3/8 2 7/16	60	2-24 2-26 2-27 5212	11789 52437	4.3307 110	1 9/16 39.7	1 1/4 31.8	7/16 11.1	21/64 8.3	2 9/16 65.1	2 63/64 75.8	.080 2.03	3/8-24	3.7 1.68
2 11/16	70	2-211 5214	13971 62143	4.9213 125	1 11/16 42.9	1 3/8 34.9	7/16 11.1	3/8 9.5	2 3/4 69.9	3 7/16 87.3	.080 2.03	7/16-20	5.45 2.47
2 7/8 2 15/16	75	2-214 2-215 5215	14839 66004	5.1181 130	1 3/4 44.5	1 1/2 38.1	7/16 11.1	3/8 9.5	3 1/16 77.8	3 41/64 92.5	.080 2.03	7/16-20	6.8 3.08
3 3/16	80	2-33 5216	17412 77449	5.5118 140	1 15/16 49.2	1 11/16 42.9	17/32 13.5	13/32 10.3	3 1/4 82.6	3 59/64 99.6	.120 3.05	7/16-20	7.2 3.27
3 1/4 3 3/8 3 7/16		2-34 2-36 2-37	18681 83093	5.9055 150	2 1/32 51.6	1 15/16 49.2	15/32 11.9	17/32 13.5	3 3/8 85.7	4 5/32 105.6	.120 3.05	7/16-20	9.3 4.22
3 1/2	90	2-38 5218	21566 95926	6.2992 160	2 7/32 56.4	2 50.8	5/8 15.9	15/32 11.9	3 25/32 96.0	4 25/64 111.5	.120 3.05	1/2-20	11.7 5.31