Direct Drive Air Blasters

Medium Stand Model

115/230V & 230/460V

Features/Specifications:

- 1 Year Warranty
- Cast aluminum non-sparking propellers
- Welded steel construction
- Portable or stationary mount
- Totally enclosed and explosion proof, ball bearing motor

Performance:

Prop Dia.	Decibals @ 10'	HP	CFM	RPM
18"	74	1/4	3450	1725
24"	80	1/4	5200	1725
	80	1/2	6500	1725
	82	1	7400	1725
	87	3	10500	1725
30"	86	1/2	8000	1725
	92	1-1/2	11000	1725
	94	3	16000	1725
36"	88	1-1/2	14850	1725
	90	2	16800	1725
	84	3	20000	1150
42"	86	2	18000	1150
	86	5	28000	1150
48"	105	7-1/2	37000	1150



Fan Component:

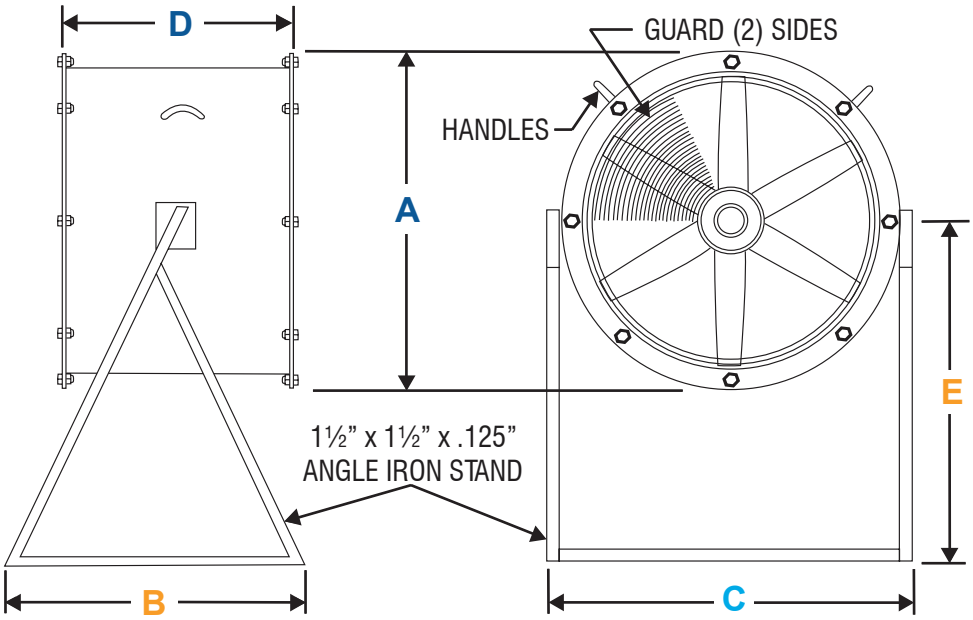

Prop Dia.	A	B	C	D	E
18	21.5	32	23.5	20	28
24	27.5	32	29.5	20	28
30	33.5	32	35.5	20	28
36	39.5	32	41.5	24	28
42	45.5	32	47.5	24	28
48	52	32	53.5	28	36

Airmaster Fan Company 9229 South Meridian Rd. Clarklake, MI 49234 Phone (517)-764-2300 www.airmasterfan.com

Information subject to change without notice; contact Airmaster.

Information:

Totally Enclosed Motor

115/230V / 60 Hz / 1 Phase

EDP #	Catalog No.	Prop Dia.	HP	Wt.
21700	18M-1/4M	18”	1/4	160
21710	24M-1/4M	24”	1/4	165
21720	24M-1/2M	24”	1/2	180
21730	24M-1M	24”	1	190
21750	30M-1/2M	30”	1/2	220
21760	30M-1-1/2M	30”	1-1/2	260
21780	36M-1-1/2M	36”	1-1/2	320
21790	36M-2M	36”	2	325

230/460V / 60 Hz / 3 Phase

EDP #	Catalog No.	Prop Dia.	HP	Wt.
21701	18MP-1/4M	18”	1/4	160
21711	24MP-1/4M	24”	1/4	165
21721	24MP-1/2M	24”	1/2	180
21731	24MP-1M	24”	1	190
21741	24MP-3M	24”	3	260
21751	30MP-1/2M	30”	1/2	220
21761	30MP-1-1/2M	30”	1-1/2	260
21771	30MP-3M	30”	3	277
21781	36MP-1-1/2M	36”	1-1/2	320
21791	36MP-2M	36”	2	325
22001	36MP-3M	36”	3	350
21811	42MP-2M	42”	2	415
22021	42MP-5M	42”	5	440
22031	48MP-7-1/2M	42”	7-1/2	745

Explosion Proof Motor

115/230V / 60 Hz / 1 Phase

EDP #	Catalog No.	Prop Dia.	HP	Wt.
21702	18M-1/4MX	18”	1/4	160
21712	24M-1/4MX	24”	1/4	165
21722	24M-1/2MX	24”	1/2	180
21732	24M-1MX	24”	1	190
21752	30M-1/2MX	30”	1/2	220
21762	30M-1-1/2MX	30”	1-1/2	260
21782	36M-1-1/2MX	36”	1-1/2	320

230/460V / 60 Hz / 3 Phase

EDP #	Catalog No.	Prop Dia.	HP	Wt.
21703	18MP-1/4MX	18”	1/4	160
21713	24MP-1/4MX	24”	1/4	165
21723	24MP-1/2MX	24”	1/2	180
21733	24MP-1MX	24”	1	190
21743	24MP-3MX	24”	3	260
21753	30MP-1/2MX	30”	1/2	220
21763	30MP-1-1/2MX	30”	1-1/2	260
21773	30MP-3MX	30”	3	277
21783	36MP-1-1/2MX	36”	1-1/2	320
21793	36MP-2MX	36”	2	325
22003	36MP-3MX	36”	3	350
21813	42MP-2MX	42”	2	415
22023	42MP-5MX	42”	5	440
22033	48MP-7-1/2MX	48”	7-1/2	745

Note: Special custom order products. Once in production, non-cancellable, non-returnable under any circumstance. Fans are pre-assembled, tested and ready to install. Specify voltage required when ordering.

Optional Prewired Starter Switches

1 Phase Standard

EDP #	Catalog No.	Motor HP
91901	Starter Switch	1/4, 1/2, 1
91902	Starter Switch	1-1/2

3 Phase Standard

EDP #	Catalog No.	Motor HP
91903	Starter Switch	1/4, 1/2, 1, 1-1/2, 2, 3
91904	Starter Switch	5

Ordering:

Fan No.	EDP #	Qty.	Catalog No.	Voltage	HP	Comments

Project		Location	
Engineer		Contractor	

Submitted by		Date		Approved by		Date	

Airmaster Fan Company 9229 South Meridian Rd. Clarklake, MI 49234 Phone (517)-764-2300 www.airmasterfan.com

Information subject to change without notice; contact Airmaster.