Direct Drive Fans - Tube Axial

Model PLDA

Features/Specifications:

- Fan easily mounts in round duct
- Ball Bearing Standard NEMA Frame Motors
- Spark resistant cast aluminum propellers
- 1 year warranty



Fan Component:

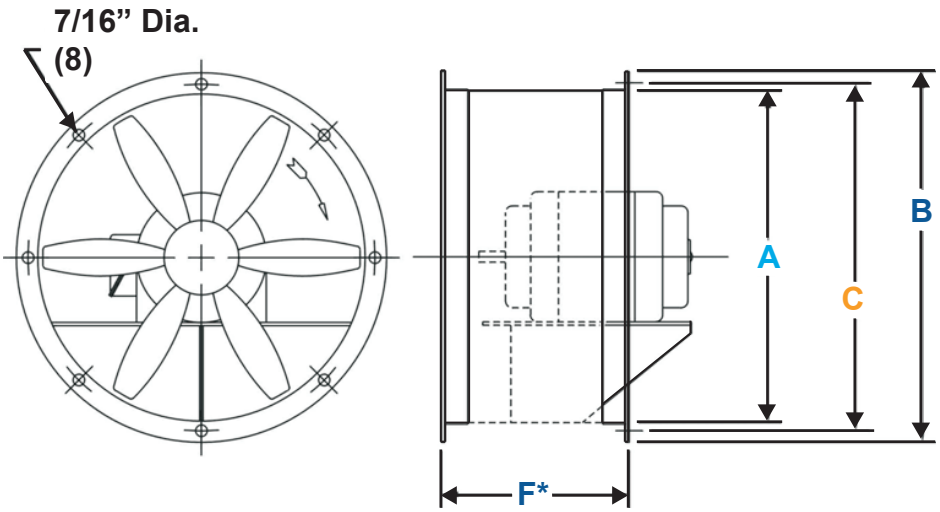

Fan Dimensions (in.)

Prop Dia.	A	B	C	F*
12"	12	14	13	14
18"	18	20	19	14
24"	24	27	25-5/8	18
27"	27	30	28-5/8	18
30"	30	33	31-5/8	18
34"	34	37	35-5/8	18
42"	42	45	43-5/8	18
48"	48	51	49-5/8	18

Performance/Information:

Totally Enclosed Single Speed - 1 Phase, 115/230V

EDP #	Catalog No.	Prop Dia.	HP	Fan RPM	Capacity (CFM) @ "S.P." 0"	1/8"	1/4"	3/8"	1/2"	3/4"	Approx Ship Wt.
32002	PLDA12FZ	12"	1/2	3450	1875	1650	1400	1320	1250	1100	41
32008	PLDA12HZ	12"	3/4	3450	2044	1960	1920	1820	1650	1500	50
32014	PLDA18CA	18"	1/4	1725	3450	3050	2500	1200			60
32020	PLDA18DA	18"	1/3	1725	3315	3000	2600	2000	1400		90
32026	PLDA18JA	18"	1	1725	4600	4375	4080	3600	3000	2100	100
32032	PLDA24CA	24"	1/4	1725	5200	4200	2820	1050			96
32038	PLDA24DC	24"	1/3	1140	4975	4690	4250	3920	2850		100
32044	PLDA24FA	24"	1/2	1725	6510	5880	5200	4150	3100	1800	114
32051	PLDA24HC	24"	3/4	1140	6900	6450	6265	5600	3300		120
32057	PLDA24JA	24"	1	1725	7425	7000	6350	5850	5000	3300	150
32066	PLDA27FA	27"	1/2	1725	7550	6829	6000	5100	4000	2000	122
32073	PLDA27JA	27"	1	1725	9600	9000	8400	7775	7050	4800	152
32079	PLDA27MA	27"	2	1725	11500	11200	10700	10000	9300	8000	175
32085	PLDA30FA	30"	1/2	1725	8980	7650	6300	5400	4350	2300	128
32091	PLDA30HC	30"	3/4	1140	10440	9750	8750	7640	600		185
32097	PLDA30MA	30"	2	1725	12000	11250	10450	9600	8700	6000	180
32109	PLDA34KA	34"	1-1/2	1725	13350	12100	10000	9100	7300		190
32115	PLDA34MA	34"	2	1725	14850	13600	12100	10450	8800	4000	200

Airmaster Fan Company 9229 South Meridian Rd. Clarklake, MI 49234 Phone (517)-764-2300 www.airmasterfan.com

Information subject to change without notice; contact Airmaster.

Explosion Proof Single Speed - 1 Phase, 115/230V

EDP #	Catalog No.	Prop Dia.	HP	Fan RPM	Capacity (CFM) @ "S.P." 0"	1/8"	1/4"	3/8"	1/2"	3/4"	Approx Ship Wt.
32004	PLDA12FZ	12"	1/2	3450	1875	1650	1400	1320	1250	1100	41
32010	PLDA12HZ	12"	3/4	3450	2044	1960	1920	1820	1650	1500	50
32016	PLDA18CA	18"	1/4	1725	3450	3050	2500	1200			60
32022	PLDA18DA	18"	1/3	1725	3315	3000	2600	2000	1400		90
32028	PLDA18JA	18"	1	1725	4600	4375	4080	3600	3000	2100	100
32034	PLDA24CA	24"	1/4	1725	5200	4200	2820	1050			96
32040	PLDA24DC	24"	1/3	1140	4975	4690	4250	3920	2850		100
32046	PLDA24FA	24"	1/2	1725	6510	5880	5200	4150	3100	1800	114
32053	PLDA24HC	24"	3/4	1140	6900	6450	6265	5600	3300		120
32059	PLDA24JA	24"	1	1725	7425	7000	6350	5850	5000	3300	150
32068	PLDA27FA	27"	1/2	1725	7550	6829	6000	5100	4000	2000	122
32075	PLDA27JA	27"	1	1725	9600	9000	8400	7775	7050	4800	152
32081	PLDA27MA	27"	2	1725	11500	11200	10700	10000	9300	8000	175
32087	PLDA30FA	30"	1/2	1725	8980	7650	6300	5400	4350	2300	128
32093	PLDA30HC	30"	3/4	1140	10440	9750	8750	7640	600		185
32111	PLDA30MA	30"	2	1725	12000	11250	10450	9600	8700	6000	180

Explosion Proof Single Speed - 3 Phase, 230/460V

EDP #	Catalog No.	Prop Dia.	HP	Fan RPM	Capacity (CFM) @ "S.P." 0"	1/8"	1/4"	3/8"	1/2"	3/4"	Approx Ship Wt.
32005	PLDA12FZ	12"	1/2	3450	1875	1650	1400	1320	1250	1100	41
32011	PLDA12HZ	12"	3/4	3450	2044	1960	1920	1820	1650	1500	50
32017	PLDA18CA	18"	1/4	1725	3450	3050	2500	1200			60
32023	PLDA18DA	18"	1/3	1725	3315	3000	2600	2000	1400		90
32029	PLDA18JA	18"	1	1725	4600	4375	4080	3600	3000	2100	100
32035	PLDA24CA	24"	1/4	1725	5200	4200	2820	1050			96
32041	PLDA24DC	24"	1/3	1140	4975	4690	4250	3920	2850		100
32047	PLDA24FA	24"	1/2	1725	6510	5880	5200	4150	3100	1800	114
32054	PLDA24HC	24"	3/4	1140	6900	6450	6265	5600	3300		120
32060	PLDA24JA	24"	1	1725	7425	7000	6350	5850	5000	3300	150
32063	PLDA24OA	24"	3	1725	10500	9800	9500	9100	8700	7800	190
32069	PLDA27FA	27"	1/2	1725	7550	6829	6000	5100	4000	2000	122
32076	PLDA27JA	27"	1	1725	9600	9000	8400	7775	7050	4800	152
32082	PLDA27MA	27"	2	1725	11500	11200	10700	10000	9300	8000	175
32088	PLDA30FA	30"	1/2	1725	8980	7650	6300	5400	4350	2300	128
32094	PLDA30HC	30"	3/4	1140	10440	9750	8750	7640	600		185
32100	PLDA30MA	30"	2	1725	12000	11250	10450	9600	8700	6000	180
32103	PLDA30MC	30"	2	1140	14000	13750	12900	11850	10450	2500	180
32106	PLDA30OA	30"	3	1725	16000	15350	14700	13850	12900	10200	200
32112	PLDA34KA	34"	1-1/2	1725	13350	12100	10000	9100	7300		190
32118	PLDA34MA	34"	2	1725	14850	13600	12100	10450	8800	4000	200
32121	PLDA34MC	34"	2	1140	15950	15100	13800	12500	11400		200
32124	PLDA34OC	34"	3	1140	19300	18290	17230	16000	14800	11614	250
32129	PLDA42MC	42"	2	1140	17964	17277	15326	13990	12351	7600	252
32134	PLDA42PC	42"	5	1140	28970	27960	26840	25700	24200	19500	300

Totally Enclosed Single Speed - 3 Phase, 230/460V

EDP #	Catalog No.	Prop Dia.	HP	Fan RPM	Capacity (CFM) @ "S.P." 0"	1/8"	1/4"	3/8"	1/2"	3/4"	Approx Ship Wt.
32003	PLDA12FZ	12"	1/2	3450	1875	1650	1400	1320	1250	1100	41
32009	PLDA12HZ	12"	3/4	3450	2044	1960	1920	1820	1650	1500	50
32015	PLDA18CA	18"	1/4	1725	3450	3050	2500	1200			60
32021	PLDA18DA	18"	1/3	1725	3315	3000	2600	2000	1400		90
32027	PLDA18JA	18"	1	1725	4600	4375	4080	3600	3000	2100	100
32033	PLDA24CA	24"	1/4	1725	5200	4200	2820	1050			96
32039	PLDA24DC	24"	1/3	1140	4975	4690	4250	3920	2850		100
32045	PLDA24FA	24"	1/2	1725	6510	5880	5200	4150	3100	1800	114
32052	PLDA24HC	24"	3/4	1140	6900	6450	6265	5600	3300		120
32058	PLDA24JA	24"	1	1725	7425	7000	6350	5850	5000	3300	150
32062	PLDA24OA	24"	3	1725	10500	9800	9500	9100	8700	7800	190
32067	PLDA27FA	27"	1/2	1725	7550	6829	6000	5100	4000	2000	122
32074	PLDA27JA	27"	1	1725	9600	9000	8400	7775	7050	4800	152
32080	PLDA27MA	27"	2	1725	11500	11200	10700	10000	9300	8000	175
32086	PLDA30FA	30"	1/2	1725	8980	7650	6300	5400	4350	2300	128
32092	PLDA30HC	30"	3/4	1140	10440	9750	8750	7640	600		185
32098	PLDA30MA	30"	2	1725	12000	11250	10450	9600	8700	6000	180
32102	PLDA30MC	30"	2	1140	14000	13750	12900	11850	10450	2500	180
32105	PLDA30OA	30"	3	1725	16000	15350	14700	13850	12900	10200	200
32110	PLDA34KA	34"	1-1/2	1725	13350	12100	10000	9100	7300		190
32116	PLDA34MA	34"	2	1725	14850	13600	12100	10450	8800	4000	200
32120	PLDA34MC	34"	2	1140	15950	15100	13800	12500	11400		200
32123	PLDA34OC	34"	3	1140	19300	18290	17230	16000	14800	11614	250
32126	PLDA42JD	42"	1	870	15800	15200	13480	12310	5800	900	260
32128	PLDA42MC	42"	2	1140	17964	17277	15326	13990	12351	7600	252
32131	PLDA42MD	42"	2	870	22040	21000	20500	18500	15000	6000	260
32133	PLDA42PC	42"	5	1140	28970	27960	26840	25700	24200	19500	300
32136	PLDA48OC	48"	3	1140	28600	26500	24400	22000	20000	15900	290
32138	PLDA48OD	48"	3	870	28700	26500	24200	21600	18500	10000	290
32140	PLDA48PD	48"	5	870	33000	31500	29750	27650	25300	18000	310

PLDA Tube Axial Accessories

Matching Flange (1 ea.)

EDP #	Catalog No.	Prop Dia.
32141	PLDA Accessory	12"
32146	PLDA Accessory	18"
32152	PLDA Accessory	24"
32157	PLDA Accessory	27"
32162	PLDA Accessory	30"
32167	PLDA Accessory	34"
32173	PLDA Accessory	42"
32178	PLDA Accessory	48"

Inspection Door

EDP #	Catalog No.	Prop Dia.
32147	PLDA Accessory	18"
32153	PLDA Accessory	24"
32158	PLDA Accessory	27"
32163	PLDA Accessory	30"
32168	PLDA Accessory	34"
32174	PLDA Accessory	42"
32179	PLDA Accessory	48"

Guard (each)

EDP #	Catalog No.	Prop Dia.
32143	PLDA Accessory	12"
32148	PLDA Accessory	18"
32154	PLDA Accessory	24"
32159	PLDA Accessory	27"
32164	PLDA Accessory	30"
32169	PLDA Accessory	34"
32175	PLDA Accessory	42"
32180	PLDA Accessory	48"

Epoxy Coating

EDP #	Catalog No.	Prop Dia.
32144	PLDA Accessory	12”
32149	PLDA Accessory	18”
32155	PLDA Accessory	24”
32160	PLDA Accessory	27”
32165	PLDA Accessory	30”
32171	PLDA Accessory	34”
32176	PLDA Accessory	42”
32181	PLDA Accessory	48”

Cont. Weld of Flange to Drum

EDP #	Catalog No.	Prop Dia.
32145	PLDA Accessory	12”
32151	PLDA Accessory	18”
32156	PLDA Accessory	24”
32161	PLDA Accessory	27”
32166	PLDA Accessory	30”
32172	PLDA Accessory	34”
32177	PLDA Accessory	42”
32182	PLDA Accessory	48”

NOTE: For special custom order products - once in production, non-cancellable, non returnable under any circumstances.

Ordering:

Fan No.	EDP #	Qty.	Catalog No.	HP	RPM	Comments

Project		Location	
Engineer		Contractor	

Submitted by		Date		Approved by		Date	