Direct Drive Propeller Rooftop Exhaust Fans

Model ARD

Features/Specifications:

- 1 Year Warranty
- Wall or Roof Mount
- Spun Aluminum Housing
- Bird Screen
- Integral vibration isolators
- Aluminum bladed propellers

Fan Component:

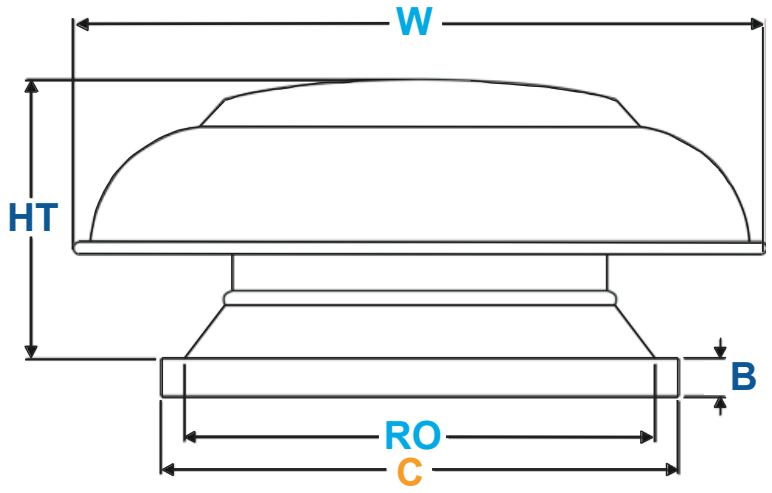

Accessories/Mounting Options:

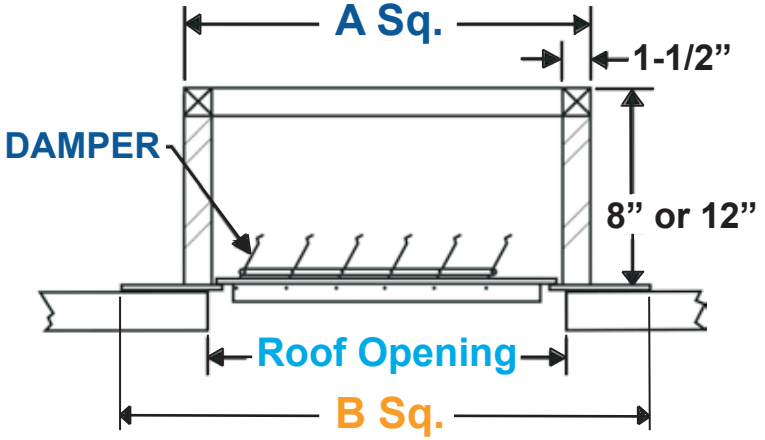

Fan Dimensions (in.)

Prop Dia.	Catalog No.	HT	W	B	C	RO
10”	ARD100	9	18	2	19	13
12”	ARD120	11	21-1/2	2	19	13
14”	ARD140	14	27	2	21	16
18”	ARD180	16	34	2	26	20

Curb Dimensions (in.)

Curb Cat. No.	A Sq.	B Sq.	Roof Opening	DAMPER Cat. No.
PACA17.75	17-3/4	23-3/4	13	BD14.5A
PACA20	20	24	16	BD16.75A
PACA25	25	29	20	BD21.75A

Airmaster Fan Company 9229 South Meridian Rd. Clarklake, MI 49234 Phone (517)-764-2300 www.airmasterfan.com

Information subject to change without notice; contact Airmaster.

Performance:

Catalog No.	HP	RPM	Capacity (CFM) at "S.P." 0"	1/8"	1/4"	3/8"	1/2"	5/8"	3/4"	1"
ARD100	1/30	1500	525	330	225	140				
ARD120	1/10	1500	830	700	620	510	430	350	250	80
ARD140	.17	1100	1160	880	790	650	520	390	240	
ARD180	1/3	1100	2420	2000	1610	1500	1300	1050	890	410

*Performance shown is for installation type A: Free inlet, Free outlet. Performance ratings do not include the effects of appurtenances in the airstream. Power rating (BHP) does not include transmission losses.

Information:

115V Models & Optional Curbs

ODP 1 Speed 115V / 60 Hz / 1 Phase

Prop Dia.	EDP #	Catalog No.	Ship Wt.
10"	32644	ARD100XB	12
12"	32645	ARD120XB	20
14"	32646	ARD140BC	34
18"	32647	ARD180DC	46

Roof Mount Damper

EDP #	Catalog No.	Used with ARD models Cat. No.	Ship Wt.
32452	BD14.5A	ARD100XB, ARD120XB	3
32453	BD16.75A	ARD140BC	4
32454	BD21.75A	ARD180DC	5

8" & 12" Curb

Curb Size	EDP #	Catalog No.	Used with ARD Models Cat. No.
8"	31100	PACA17.75-8	ARD100XB, ARD120XB
12"	31101	PACA17.75-12	ARD100XB, ARD120XB
8"	31102	PACA20-8	ARD140BC
12"	31103	PACA20-12	ARD140BC
8"	31110	PACA25-8	ARD180DC
12"	31111	PACA25-12	ARD180DC

Pitched and Peaked Curbs available. Metal roofs, consult factory for sizing and pricing. Special custom order product: once in production, non-cancelable, non-returnable under any circumstances.

Ordering:

Fan No.	EDP #	Qty.	Catalog No.	CFM	RPM	Watts	Pressure	Comments

Project		Location	
Engineer		Contractor	

Submitted by		Date		Approved by		Date	

Airmaster Fan Company 9229 South Meridian Rd. Clarklake, MI 49234 Phone (517)-764-2300 www.airmasterfan.com

Information subject to change without notice; contact Airmaster.