SPECIFICATIONS	
CAP MATERIAL/PLATING	BRASS/NICKEL
GASKET MATERIAL	NITRILE (BUNA-N)
O-RING MATERIAL	NITRILE (BUNA-N)
CABLE MATERIAL	STAINLESS STEEL/NYLON COATED

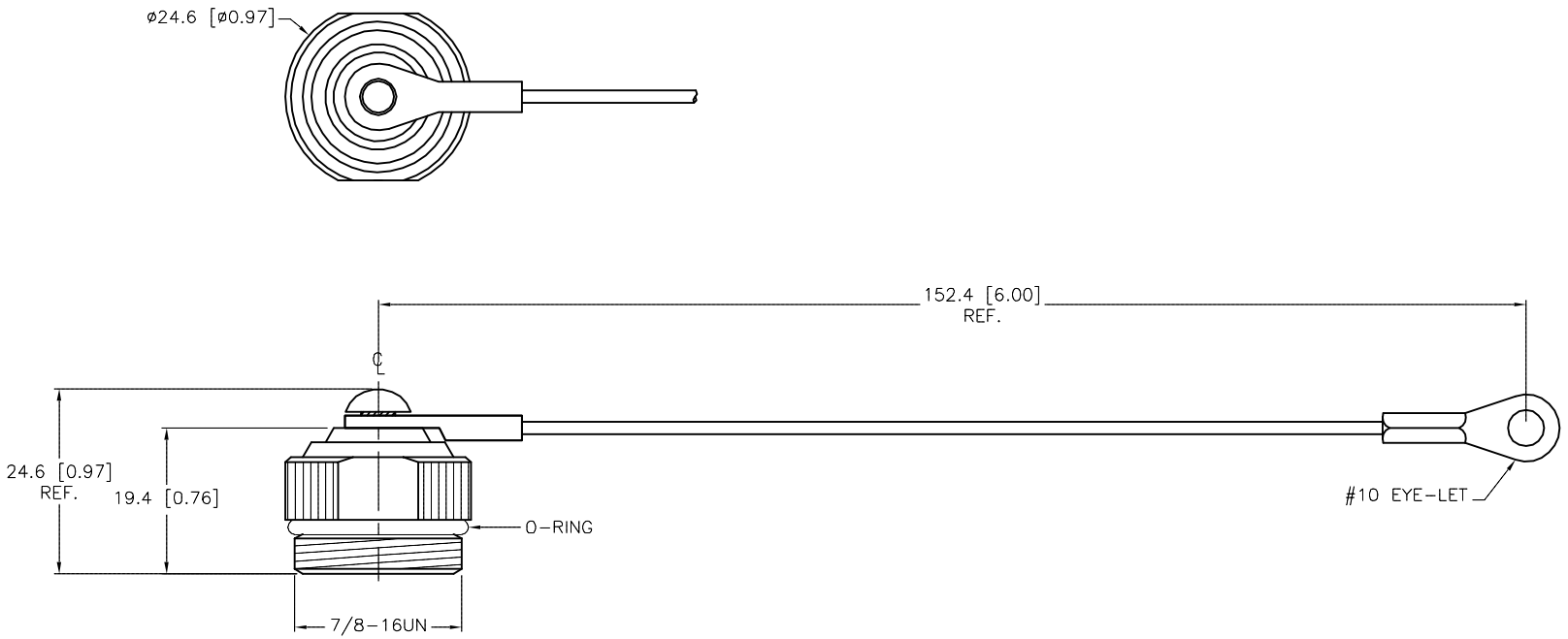

SOURCE DRAWING - FOR REFERENCE ONLY

REV	DESCRIPTION	BY	DATE	ECO NO.
C	UPDATE LANYARD ORIENTATION	KMY	08/19/14	46768

RELATED DOCUMENTS
1.
2.
3.
4.

3RD ANGLE PROJECTION

THIS DRAWING IS CONFIDENTIAL AND THE PROPERTY OF TURCK INC. USE OF THIS DOCUMENT WITHOUT WRITTEN PERMISSION IS PROHIBITED.

TURCK INC
High Technology Sensors and Automation Controls
3000 CAMPUS DRIVE
MINNEAPOLIS, MN 55441
1-800-544-7769
(763) 553-7300
(763) 553-0708 fax
turck.com

MATERIAL: SEE SPECIFICATIONS

FINISH: SEE SPECIFCATIONS

ALL DIMENSIONS DISPLAYED ON THIS DRAWING ARE FOR REFERENCE ONLY

CONTACT TURCK FOR MORE INFORMATION

DRFT: DD | DATE: 05/08/03

APVD: | SCALE: 1=1.0

UNIT OF MEASUREMENT
MILLIMETER [INCH]
DO NOT SCALE THIS DRAWING

DESCRIPTION: RSF-CC

IDENTIFICATION NO.: U0899-35 | REV: C

FILE: U0899-35 | SHEET 1 OF 1