Operating Instructions

Series HD70000 Spring Driven Hose Reels

Low, Medium and High Pressure Model Numbers:

HD76000 OLP	HD78075 OLP	HD78050 OMP	HD76000 OHP
HD76050 OLP	HD79000 OLP	HD78005 OMP	HD76050 OHP
HD76005 OLP	HD79025 OLP	HD78065 OMP	HD76005 OHP
HD76075 OLP	HD76000 OMP	HD74000 OHP	HD76075 OHP
HD76100 OLP	HD76050 OMP	HD74050 OHP	PWD76005 OHP
HD78000 OLP	HD76005 OMP	HD74005 OHP	PWD76050 OHP
HD78050 OLP	HD76075 OMP	HD74075 OHP	HD76075 OLP-HTH
HD78005 OLP	HD78000 OMP	HD74100 OHP	



Dimensions

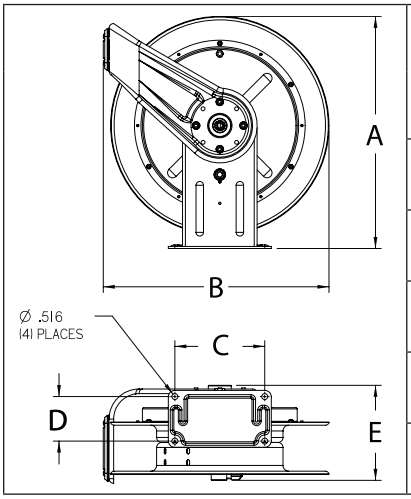

	1		2	
	in	mm	in	mm
A	20 1/4"	514	20 1/4"	514
B	19 3/4"	502	19 3/4"	502
C	7 13/16"	198	7 13/16"	198
D	3 7/8"	98	3 7/8"	98
E	7"	178	8 1/4"	210

IMPORTANT

Read this manual carefully before installing, operating or servicing this equipment.

SAFETY

Personal injury and/or equipment damage may result if proper safety precautions are not observed.

- Ensure that reel is properly installed before connecting input and output hoses.
- Bleed fluid/gas pressure from system before servicing reel.
- Before connecting reel to supply line, ensure that pressure does not exceed maximum working pressure rating of reel.
- Remember, even low pressure is very dangerous and can cause personal injury or death.
- Be aware of machinery and personnel in work area.
- If a leak occurs in the hose or reel, remove system pressure immediately.
- A high tension spring assembly is contained within the reel. Exercise extreme caution.
- Pull hose from reel by grasping the hose itself, not the control valve.
- Ensure that reel, hose, and equipment being serviced are properly grounded. Use an ohmmeter to check ground continuity.
- If reel ceases to unwind or rewind, remove system pressure immediately. Do not pull or jerk on hose!
- Treat and respect the hose reel as any other piece of machinery, observing all common safety practices.

Form# 1286-716 Rev: 5/2017

Reelcraft Industries, Inc. • 2842 E Business Hwy 30, Columbia City, IN 46725
Ph: 800-444-3134 / 260-248-8188 • Fax: 800-444-4587 / 260-248-2605
Customer Service: 855-634-9109 • reelcraft@reelcraft.com • www.reelcraft.com

REELCRAFT®

INSTALLATION INSTRUCTIONS

MOUNTING

Caution: Unless reel was specified differently when ordering, maximum installation height is 16 feet. Do not exceed this distance.

1. Unpack and inspect reel for damage. Turn by hand to check for smooth operation. Check for completeness.
2. Configure reel for top, side or bottom-wind hose dispensing by removing nuts (1) securing guide arm bracket (2). Position guide arm bracket to desired location, and replace nuts. **Caution:** When changing guide arm positions, the U-bolt must be placed in the proper location as instructed in figure A below. The reel can "latch out" during use if this instruction is not adhered to.
3. Position reel on floor, wall, or ceiling. Secure into place using four (customer supplied) bolts (3).

INSTALLING THE INPUT HOSE(S)

Warning: Ensure that supply line pressure does not exceed maximum working pressure rating of reel. Apply pipe thread sealant to all threads.
Caution: Use flexible hose connection at input. Do not use rigid plumbing.

1. Connect supply line hose (4) to main shaft input (5) as indicated in illustration.

INSTALLING THE OUTPUT HOSE(S)

Warning: Use extreme caution; reel under tension. Avoid releasing latch mechanism. Apply pipe thread sealant to all threads.

1. Manually turn sheave (10) until spring is tight, back off 3 turns, then latch.
2. Route output hose(s) (11) through guide arm bracket (2), U-bolts (12), then through cutout (13) in spool as indicated in illustration.
3. Connect output hose(s) (11) to swivel (14) as indicated in illustration.
4. Tighten U-bolts (12).
5. Charge hose(s). Momentarily open control valve to purge hose(s) of gases. When fluid appears at control valve, close valve. With hose(s) fully charged, release latch and wind output hose(s) onto reel.

ADJUSTMENTS

Warning: Use extreme caution; reel under tension. Avoid releasing latch mechanism. If necessary, adjust spring tension on reel by adding or removing wraps of hose from spool, one wrap at a time, until desired tension is obtained. Add wraps to increase tension. Remove wraps to decrease tension.

SERVICE INSTRUCTIONS

User servicing of the reel is limited to replacing input/output hoses only. Refer all other repairs to an authorized service person or directly to Reelcraft. Failure to do so can result in personal injury and/or equipment damage and may void the warranty. **Warning:** Rewind hose on reel, then bleed pressure from system before performing the following procedures.

1. Replace hoses in accordance with procedures given in "Installation Instructions" section of this manual.

Caution: When replacing drive spring, hold the center of the spring down as the hub is pulled out. If the center is allowed to raise up, the spring may escape from it's container with enough force to cause injuries.

When disposing of old or broken spring assemblies, the coils should be welded or wired together to prevent possible injury to scrap handling personnel.

2. All mating moving parts are to be lubricated with Perma Bond or Loctite anti-seize compound.

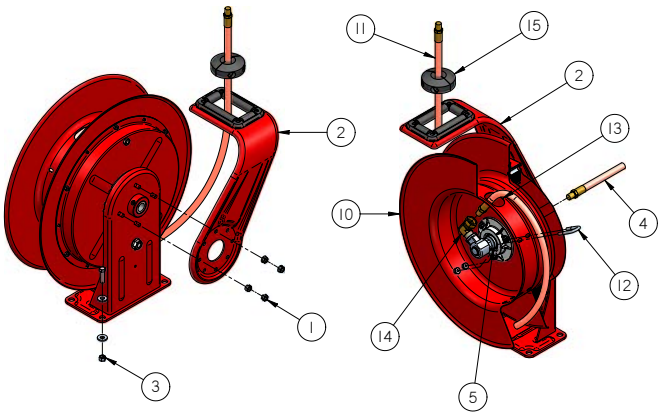

Figure A

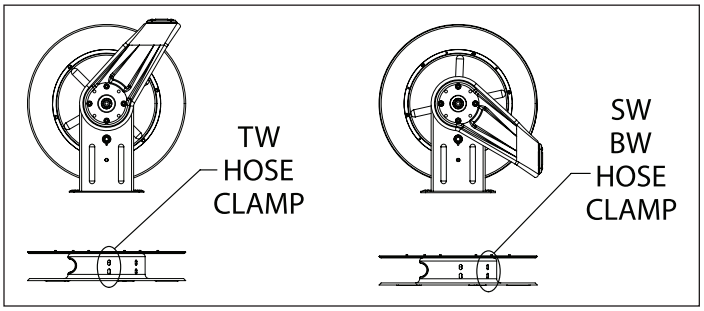

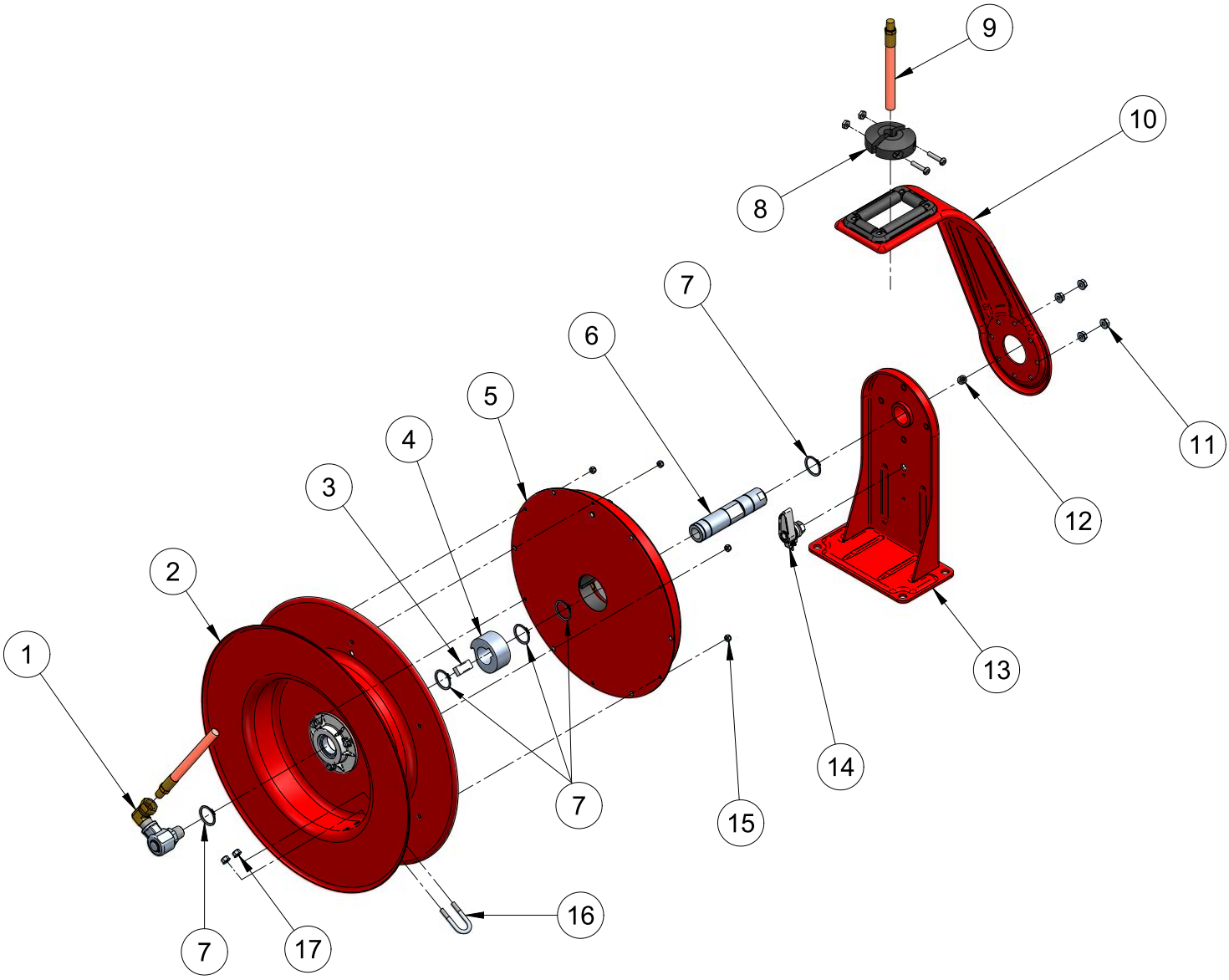

Refer to page 4 for part numbers.

Item #	Description	# Req.	HD76005 OLP	HD76075 OLP	HD76100 OLP	HD78005 OLP	HD78075 OLP	HD76005 OMP	HD76075 OMP	HD78005 OMP
1	Swivel & Ell Assembly	1	S600923-1	S600923-1	S600923-1	S600923-1	S600923-1	S600300	S600300	S600300
2	Spool & Hub Assembly	1	602704	602704	602704	602704	602704	602704	602704	602704
3	Arbor Key	1	261275	261275	261275	261275	261275	261275	261275	261275
4	Spring Arbor	1	261274	261274	261274	261274	261274	261274	261274	261274
5	Containerized Drive Spring	1	S602718-80	S602718-80	S602718-80	S602720-70	S602720-70	602720-100	602720-100	602721-80
6	Main Shaft	1	262948	262948	262948	262948	262948	262948	262948	262948
7	Snap Ring	5	300007	300007	300007	300007	300007	300007	300007	300007
8	Bumper Stop Assembly	1	None	1-HR1004-3	1-HR1004-3	None	2-HR1004-3	None	1-HR1004-3	None
9	Hose Assembly	1	None	601017-75	601017-100	None	601021-75	None	23-601094	None
10	Guide Arm & Roller Assy	1	602697	602697	602697	602697	602697	602697	602697	602697
11	Lock Nut	4	300107	300107	300107	300107	300107	300107	300107	300107
12	Set Screw	1	S35-84	S35-84	S35-84	S35-84	S35-84	S35-84	S35-84	S35-84
13	Base Assembly	1	602686	602686	602686	602686	602686	602686	602686	602686
14	Latch Pawl Assembly	1	S602694	S602694	S602694	S602694	S602694	S602694	S602694	S602694
15	Nyloc Nut	6	S82-15	S82-15	S82-15	S82-15	S82-15	S82-15	S82-15	S82-15
16	U-Bolt	1	3-117440	3-117440	3-117440	3-117440	3-117440	3-117440	3-117440	3-117440
17	1/4-20 Nylon Locknut	2	261650-1	261650-1	261650-1	261650-1	261650-1	261650-1	261650-1	261650-1
Hose I.D. x Length			None	3/8" X 75'	3/8" X 100'	None	1/2" X 75'	None	3/8" X 75'	None
Reel Inlet Connection			1/2" NPT	1/2" NPT	1/2" NPT	1/2" NPT	1/2" NPT	1/2" NPT	1/2" NPT	1/2" NPT
Maximum Operating Pressure			500 PSI	300 PSI	300 PSI	500 PSI	300 PSI	3000 PSI	2600 PSI	3250 PSI
Maximum Operating Temperature			150 °F	150 °F	150 °F	150 °F	150 °F	210 °F	210 °F	210 °F
Dimension Size Index			2	2	2	2	2	2	2	2

Item #	Description	# Req.	HD78065 OMP	HD74005 OHP	HD74075 OHP	HD74100 OHP	HD76005 OHP	HD76075 OHP	PWD76005 OHP	PWD76075 OHP	HD76075 OLP-HTH
1	Swivel & Ell Assembly	1	S600300	S602110	S602110	S602110	S602110	S602110	602110-1	602110-1	S600923-1
2	Spool & Hub Assembly	1	602704	602704	602704	602704	602704	602704	602704	602704	602704
3	Arbor Key	1	261275	261275	261275	261275	261275	261275	261275	261275	261275
4	Spring Arbor	1	261274	261274	261274	261274	261274	261274	261274	261274	261274
5	Containerized Drive Spring	1	602721-80	602733	602733	602733	602720-100	602720-100	602720-100	602720-100	S602718-80
6	Main Shaft	1	262948	262948	262948	262948	262948	262948	262948	262948	262948
7	Snap Ring	5	300007	300007	300007	300007	300007	300007	300007	300007	300007
8	Bumper Stop Assembly	1	2-HR1004-3	None	1-HR1004-3	1-HR1004-3	None	602452	None	602452	1-HR1004-3
9	Hose Assembly	1	9-601094	None	11-260044	33-260044	None	16-260044	None	16-260044	601143-75
10	Guide Arm & Roller Assembly	1	602697	602697	602697	602697	602697	602697	602697	602697	602697
11	Lock Nut	4	300107	300107	300107	300107	300107	300107	300107	300107	300107
12	Set Screw	1	S35-84	S35-84	S35-84	S35-84	S35-84	S35-84	S35-84	S35-84	S35-84
13	Base Assembly	1	602686	602686	602686	602686	602686	602686	602686	602686	602686
14	Latch Pawl Assembly	1	S602694	S602694	S602694	S602694	S602694	S602694	S602694	S602694	S602694
15	Nyloc Nut	6	S82-15	S82-15	S82-15	S82-15	S82-15	S82-15	S82-15	S82-15	S82-15
16	U-Bolt	1	3-117440	3-117440	3-117440	3-117440	3-117440	3-117440	3-117440	3-117440	3-117440
17	1/4-20 Nylon Locknut	2	261650-1	261650-1	261650-1	261650-1	261650-1	261650-1	261650-1	261650-1	261650-1
Hose I.D. x Length			1/2" X 65'	None	1/4" X 75'	1/4" X 100'	None	3/8" X 75'	None	3/8" X 75'	3/8" x 75'
Reel Inlet Connection			1/2" NPT	1/2" NPT	1/2" NPT	1/2" NPT	1/2" NPT	1/2" NPT	1/2" NPT	1/2" NPT	1/2" NPT
Maximum Operating Pressure			3250 PSI	5000 PSI	5000 PSI	5000 PSI	5000 PSI	4800 PSI	4800 PSI	4800 PSI	300 PSI
Maximum Operating Temperature			210 °F	210 °F	210 °F	210 °F	210 °F	210 °F	210 °F	210 °F	150 °F
Dimension Size Index			2	2	2	2	2	2	2	2	2

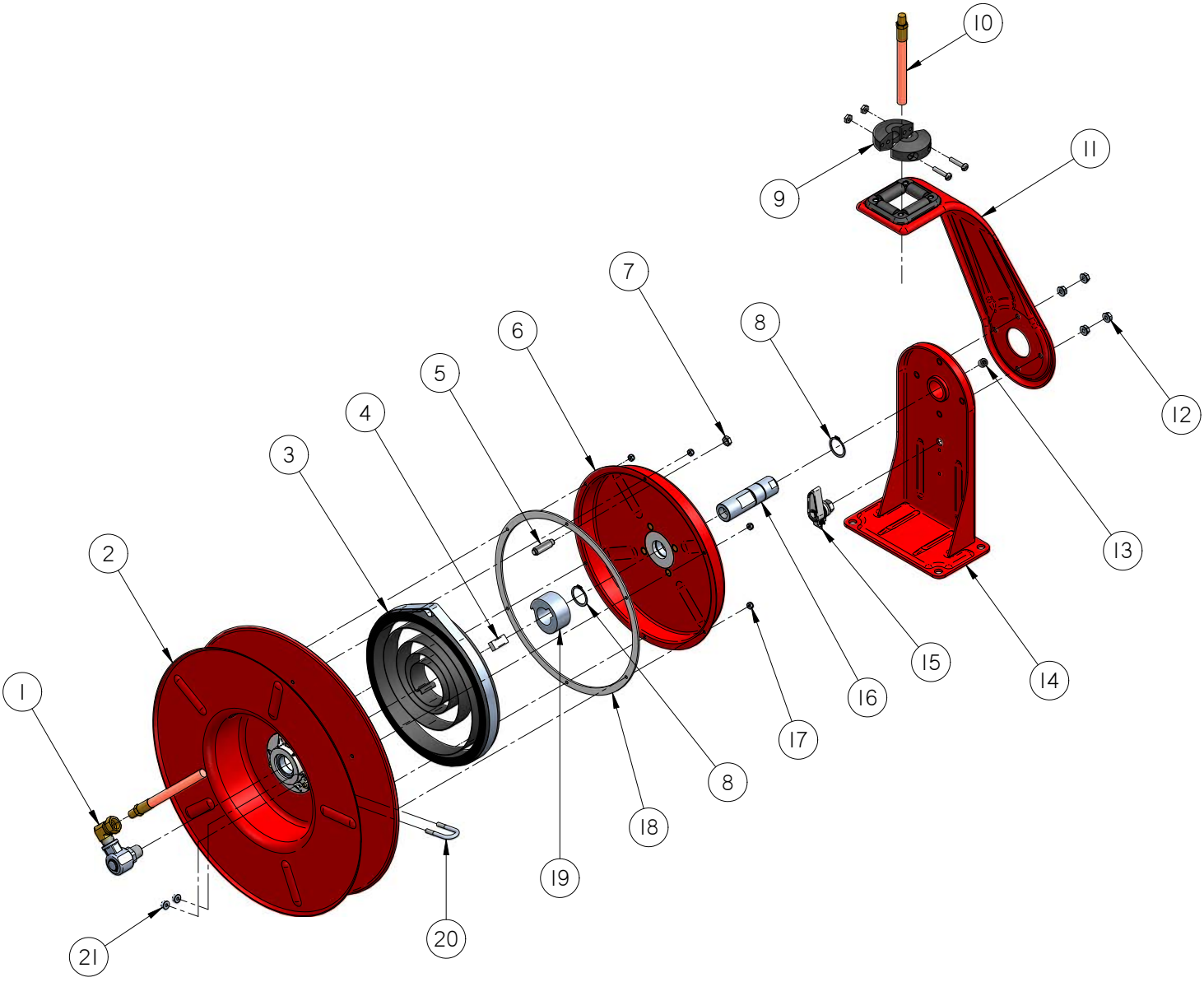

Refer to page 6 for part numbers.

Item #	Description	# Req.	HD76000 OLP	HD76050 OLP	HD76070 OLP	HD78000 OLP	HD78050 OLP	HD79000 OLP	HD79025 OLP
1	Swivel & Ell Assembly	1	S600923-1	S600923-1	S600923-1	S600923-1	S600923-1	600242	600242
2	Spool & Hub Assembly	1	602726	602726	602726	602726	602726	602726	602726
3	Drive Spring Assembly	1	S260028-1	S260028-1	S260028-1	S260037	S260037	S600023	S600023
4	Arbor Key	1	261275	261275	261275	261275	261275	261275	261275
5	Spring Case Stud	1	S260031	S260031	S260031	S260031	S260031	S260031	S260031
6	Spring Case Assembly	1	602727	602727	602727	602727	602727	602727	602727
7	Hex Jam Nut	1	S76-106	S76-106	S76-106	S76-106	S76-106	S76-106	S76-106
8	Snap Ring	2	300007	300007	300007	300007	300007	300007	300007
9	Bumper Stop Assembly	1	None	1-HR1004-3	1-HR1004-3	None	2-HR1004-3	None	3-HR1004-3
10	Hose Assembly	1	None	S601017-50	S601017-70	None	S601021-50	None	S601026-25
11	Guide Arm & Roller Assy	1	S600017	S600017	S600017	S600017	S600017	S600017	S600017
12	Lock Nut	4	300107	300107	300107	300107	300107	300107	300107
13	Set Screw	1	S35-84	S35-84	S35-84	S35-84	S35-84	S35-84	S35-84
14	Base Assembly	1	602686	602686	602686	602686	602686	602686	602686
15	Latch Pawl Assembly	1	S602694	S602694	S602694	S602694	S602694	S602694	S602694
16	Main Shaft	1	602231	602231	602231	602231	602231	602231-1	602231-1
17	Nyloc Nut	6	S82-15	S82-15	S82-15	S82-15	S82-15	S82-15	S82-15
18	Spring Case Gasket	1	S260069	S260069	S260069	S260069	S260069	S260069	S260069
19	Spring Arbor	1	261274	261274	261274	261274	261274	261274	261274
20	U-Bolt	1	3-117440	3-117440	3-117440	3-117440	3-117440	3-117440	3-117440
21	Lock Nut	2	261650-1	261650-1	261650-1	261650-1	261650-1	261650-1	261650-1
Hose I.D. x Length			None	3/8" X 50'	3/8" X 70'	None	1/2" X 50'	None	3/4" X 25'
Reel Inlet Connection			1/2" NPT	1/2" NPT	1/2" NPT	1/2" NPT	1/2" NPT	3/4" NPT	3/4" NPT
Maximum Operating Pressure			500 PSI	300 PSI	300 PSI	500 PSI	300 PSI	500 PSI	250 PSI
Maximum Operating Temperature			150 °F	150 °F	150 °F	150 °F	150 °F	150 °F	150 °F
Dimension Size Index			1	1	1	1	1	1	1

Item #	Description	# Req.	HD76000 OMP	HD76050 OMP	HD78000 OMP	HD78050 OMP	HD74000 OHP	HD74050 OHP	HD76000 OHP	HD76050 OHP
1	Swivel & Ell Assembly	1	S600300	S600300	S600300	S600300	S602110	S602110	S602110	S602110
2	Spool & Hub Assembly	1	602726	602726	602726	602726	602726	602726	602726	602726
3	Drive Spring Assembly	1	S260053	S260053	S260053	S260053	S260053	S260053	S260053	S260053
4	Arbor Key	1	261275	261275	261275	261275	261275	261275	261275	261275
5	Spring Case Stud	1	S260031	S260031	S260031	S260031	S260031	S260031	S260031	S260031
6	Spring Case Assembly	1	602727	602727	602727	602727	602727	602727	602727	602727
7	Hex Jam Nut	1	S76-106	S76-106	S76-106	S76-106	S76-106	S76-106	S76-106	S76-106
8	Snap Ring	2	300007	300007	300007	300007	300007	300007	300007	300007
9	Bumper Stop Assembly	1	None	1-HR1004-3	None	2-HR1004-3	None	1-HR1004-3	None	602452
10	Hose Assembly	1	None	S5-260043	None	S8-260043	None	S9-260044	None	S5-260044
11	Guide Arm & Roller Assy	1	S600017	S600017	S600017	S600017	S600017	S600017	S600017	S600017
12	Lock Nut	4	300107	300107	300107	300107	300107	300107	300107	300107
13	Set Screw	1	S35-84	S35-84	S35-84	S35-84	S35-84	S35-84	S35-84	S35-84
14	Base Assembly	1	602686	602686	602686	602686	602686	602686	602686	602686
15	Latch Pawl Assembly	1	S602694	S602694	S602694	S602694	S602694	S602694	S602694	S602694
16	Main Shaft	1	602231	602231	602231	602231	602231	602231	602231	602231
17	Nyloc Nut	6	S82-15	S82-15	S82-15	S82-15	S82-15	S82-15	S82-15	S82-15
18	Spring Case Gasket	1	S260069	S260069	S260069	S260069	S260069	S260069	S260069	S260069
19	Spring Arbor	1	261274	261274	261274	261274	261274	261274	261274	261274
20	U-Bolt	1	3-117440	3-117440	3-117440	3-117440	3-117440	3-117440	3-117440	3-117440
21	Lock Nut	2	261650-1	261650-1	261650-1	261650-1	261650-1	261650-1	261650-1	261650-1
Hose I.D. x Length			None	3/8" X 50'	None	1/2" X 50'	None	1/4" X 50'	None	3/8" X 50'
Reel Inlet Connection			1/2" NPT	1/2" NPT	1/2" NPT	1/2" NPT	1/2" NPT	1/2" NPT	1/2" NPT	1/2" NPT
Maximum Operating Pressure			3000 PSI	2600 PSI	3250 PSI	3250 PSI	5000 PSI	4800 PSI	5000 PSI	4800 PSI
Maximum Operating Temperature			210 °F	210 °F	210 °F	210 °F	210 °F	210 °F	210 °F	210 °F
Dimension Size Index			1	1	1	1	1	1	1	1