Reel Catalog

Hose, cord and cable reels



reelcraft.com

REELCRAFT®

Why use hose reels?

Why use hose reels? Because they make hose handling more efficient and safer. Your hoses, cables and cords will last up to five times longer. You will improve hose management, which decreases labor costs. Your chances of injuries from tripping hazards will decrease, which saves lost work time, medical bills and higher insurance. You also save the expense and time to replace expensive hoses, cables and cords that get run over by fork lifts and other vehicles.



Series 7000 - Photo courtesy of Sage Oil Vac

Five reasons why hose reels add value



Improve efficiency
Hoses, cable and cords are where you want/need them.



Increase safety
Reduce tripping accidents and lost work time.



Minimize leakages
Reduce costs of air and water leakages.



Reduce hose wear
Hose and cord on reels can last up to five times longer.



Increase productivity
No more tangled hoses improves efficiency.



Series 80000 - Photo courtesy of Nealco Equipment, LLC



Series 30000 - Photo courtesy of 1st Attack Engineering

OSHA says reduce your trips and falls

"There are many situations that may cause slips, trips and falls. The controls needed to prevent these hazards are usually obvious, but too often ignored, such as... coiling up extension cords, lines and hoses when not in use and keeping electrical and other wires out of the way." OSHA's "Fall Prevention Tips" include, "Practice good housekeeping. Keep cords, welding leads and air hoses out of walkways or adjacent work areas."

Source: www.osha.gov

Same-day quick ship program offers fastest service

Because we are centrally located in the US and have three North American warehouses, upon request, we can quickly ship our standard products the same day for domestic orders of ten or fewer standard models. Orders must be received by 1:00 pm Eastern Time. Look for the shipping icons in this catalog for designated models. For the most current list of Quick Ship reels, please visit www.reelcraft.com.

Two Year Limited Warranty and Return Policy

Reelcraft now offers a two-year limited warranty. All reels manufactured by Reelcraft Industries, Inc. are warranted to be free of defects due to faulty material or workmanship for 24 months from date of shipment. Exception: LD, LG, LH cord reels - 1 year; hose and light bulbs - 6 months. Normal wear and tear is not considered a defect in material or workmanship. For complete warranty information, online warranty registration and return information please visit www.reelcraft.com or call Reelcraft's Customer Service Department toll-free at 1-855-634-9109.

***Please refer to the online catalog for the most current and up-to-date product information.**

Reelcraft: Better by Design

Reelcraft's reels are better by design because of our lasting commitment to excellence. Our engineering team is well known for designing durable, high quality products. Our standard features include durable, corrosion-resistant powder coat paint, multi-position guide arms for versatile mounting options and heavy-duty, reinforced steel stampings for increased strength. Our reels are permanently factory-lubricated for a long, trouble-free service life. All of these features, and many more, add up to make "The Reelcraft Difference."

Reinforced Steel
The steel-stamped guide arm is reinforced to reduce bending due to angular pull.

Improved Connection
The elongated brass connector and proprietary adhesion process provide a better crimp to the hose.

Stress-Free Swivel
Our full-flow design combines the highest grade seal design with supporting bearing surfaces to insure the longest possible life.

Corrosion-Resistant
Steel components are individually powder coated to virtually eliminate corrosion.

Long Service Life
Field-proven swivel assures long service life.

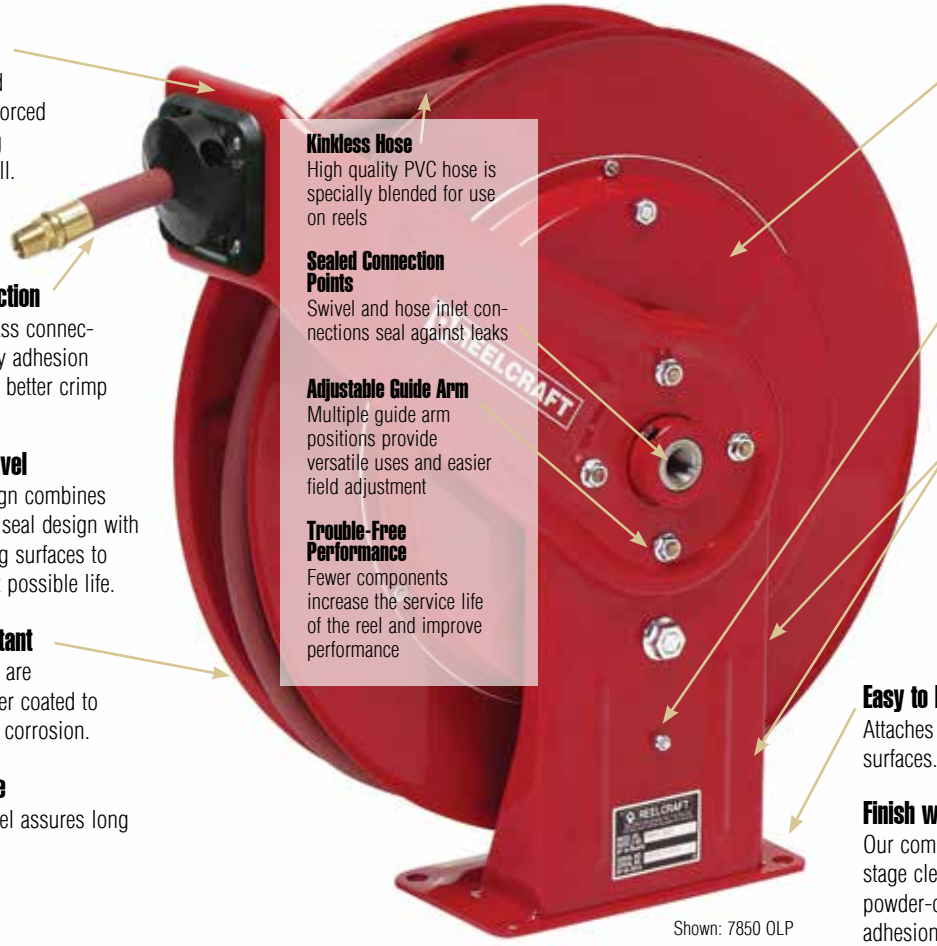

Shown: 7850 OLP

Kinkless Hose
High quality PVC hose is specially blended for use on reels

Sealed Connection Points
Swivel and hose inlet connections seal against leaks

Adjustable Guide Arm
Multiple guide arm positions provide versatile uses and easier field adjustment

Trouble-Free Performance
Fewer components increase the service life of the reel and improve performance

Long Life Drive Spring
Drive mechanism is enclosed for protection against the environment. Declutching arbor virtually eliminates possibility of spring damage due to reverse winding of reel spool.

Robust Latch
Wide profile combined with special spring assures maximum service life.

Structural Strength
Welded heavy gauge steel frame includes a robotically welded base with stiffening ribs for lighter weight, yet stronger components for ease of handling and installation.

Easy to Mount
Attaches to most structurally sound surfaces. Edges are curved for safety.

Finish with Quality
Our components undergo a special five-stage cleaning process and are individually powder-coated for the highest quality paint adhesion. Excess powder is reclaimed to be environmentally friendly.

To place an order, please advise:

1. Model number.
2. Product to be handled such as air, oil, water, etc.
3. Maximum operating pressure in P.S.I.
4. Maximum operating temperature in degrees Fahrenheit.
5. Hose inside and outside diameters and length.
6. Installation height, especially if more than 16 feet.
7. Desired guide arm position by adding one of the suffixes to the model number. Example: 5635 OLPSW for side wind.

Additional Considerations:

A flexible connection between the reel and the source of supply is required to prevent possible misalignment and binding. Non-flexible connections will void the warranty. The pressure rating of inlet hose must be equal or greater than the rating of the reel.

Accessories

Reels ordered with hose and bumper are assembled complete and ready to install. Order bumpers separately for reels without hoses.

Additional questions? Please visit our website or call for assistance. For more than 45 years, our specialty is offering hose handling solutions.

COPYRIGHT NOTICE
All rights reserved. No part of the material protected by this copyright may be reproduced or utilized in any form or by any means, electronic or mechanical, including photocopying, recording, broadcasting or by any other information storage and retrieval system without written permission from Reelcraft Industries, Inc. Reelcraft, Work Smarter, Nordic, Hose Boss, Safe-T-Reel, Better by Design, Built Better to Perform Better, and Rely on Reelcraft are the trademarks and service marks of Reelcraft Industries, Inc. registered in the United States and/or other jurisdictions. You shall not display, disparage, dilute or taint our trademarks and service marks, or use our marks in such a way that would misrepresent the identity of the owner.
All other trademarks, service marks or registered trademarks appearing on these pages are the trademarks or service marks of their respective owners. Super Swivel, Full Circle swivel, Viton, Quiet Speed, Buna, Push Lok, Stubby and Stubby II are not owned by Reelcraft Industries, Inc.

Table of Contents

Reel Series		Page	
Series RT	1/4", 3/8", 1/2" I.D.	8	
Series 4000, 5000 & 5005	1/4", 3/8", 1/2" I.D.	9	
Series 7000	1/4", 3/8", 1/2", 3/4" I.D.	10	
Series DP5000 & DP7000	1/4", 3/8", 1/2" I.D.	11	
Series HD70000	3/8", 1/2", 3/4" I.D.	12	
Series 80000 & D80000	3/8", 1/2", 3/4", 1" I.D.	13	
Series SD10000	3/4", 1" I.D.	14	
Series 9000	3/8", 1/2", 3/4", 1", 1¼", 1½" I.D.	15	
Series 3100 & 4800	1/2", 3/4", 1", 1¼", 1½" I.D.	16	
Series TH	1/4", 3/8", 1/2" I.D.	17	

Reel Series		Page	
Fuel & Grounding Reels	3/4", 1", 1¼", 1½" I.D.	18	
Stainless Steel Reels	1/4", 3/8", 1/2", 3/4", 1" I.D.	19	
Pre-Rinse, Potable Water Reels	3/8", 1/2" I.D.	20	
Series S	1/4", 3/8", 1/2", 5/8" I.D.	21	
Pressure Wash Reels	1/4", 3/8", 1/2" I.D.	22	
Series CU, CT & CM	3/8", 1/2" I.D.	23	
Series H	3/8", 1/2", 3/4" I.D.	24	
Series 30000	1/2", 3/4", 1" I.D.	24-26	

Guide Arm Positions and Suffix Codes

The suffix codes (BW, TW and SW) must be added after the model number to specify desired guide arm position. For example, 5635 OLPSW designates side wind guide arm position. **NOTE:** Series 9000 reels are shipped in the **BW** position and Series 80000 is shipped in the **SW** position. All other series reels are shipped in the **TW** position unless otherwise specified. Series 4000 and 5000 reels ordered in the **BW** position are available in constant tension only.

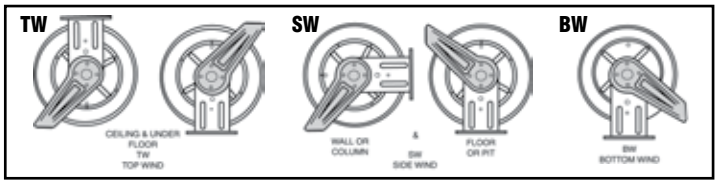

REELCRAFT®

Customer Service: 1.855.634.9109
All Other Calls: 1.800.444.3134

Table of Contents

Reel Series		Page	
Series 1200	1/2", 3/4", 1" I.D.	29	
Series 2400	1/2", 3/4", 1" I.D.	30	
Series 3900	1", 1¼", 1⅜", 1½" I.D.	31	
Liquid Propane Reels	1/2", 3/4", 1", 1¼", 1½", 2" I.D.	32	
Series 3700 & 5900	1½", 2", 2½", 3", 4" I.D.	33	
Series 3800	1¼", 1⅜", 1½", 2" I.D.	34	

Reel Series		Page	
Series 6000	1⅜", 1½", 2", 2½", 3" I.D.	35	
Series LD, LG & LH	Light and medium duty cord reels	36	
Series L 4000, L 5000, L 7000, L 70000, L NM400 & LS 5000	Heavy duty cord reels	37-41	
Series CR	High capacity cable reels	42	
Series 30000	Heavy duty cord and cable reels	43	
Series TW & BA	Welding hose reels	44-45	
Series WC & CEA	Welding cable reels	46	
Safe-T-Reels	Multiple configurations	47	
Series TB & TBL	Tool balancers	48	
Parts & Accessories	Brackets, motors, switches, etc.	49-50	

Display stands

Three reel tabletop display	S602155
Four reel tabletop display	S602155-1
Six reel display	S602037-2
Eight reel display	S602037-1

Conveniently displays up to eight reels and features removable universal brackets for ease of mounting. It is easily assembled and disassembled. Reels sold separately.



Eight reel display stand S602037-1



Three reel tabletop display stand S602155

Custom Built Reels

Custom Built Reels

Reelcraft's engineered products group custom builds reels to your specifications. Our special engineered products are developed for demanding applications in areas such as marine, military, aviation, hydroseeding, sewer and well cleaning, offshore oil rigs, robotic cable and much more. We offer flexibility, competitive pricing and a lasting committment to excellence. For more than 25 years, Reelcraft's engineered products group has produced custom products to meet individualized requirements.



Reelcraft's Capabilities

Very few size and weight constraints
We build to meet most extreme size and weight constraints.

Special finishes/paint options
Options include CARC paint, marine grade epoxy, stainless steel, liquid enamel coat paint and powder coat paint in any color.

Various drive types
Manual crank, motorized, spring driven, hand-over-hand and more.

Wide range of pressures
A wide variety of pressure ranges available from 50 to 10,000.

Unique options
Hose Boss rewind assist, tensioning bars, multiple fluid paths, level rewinds and much more.

No minimum quantities
Order from 1 to as many as you need.


Marine grade epoxy


Multiple spools


Turn-key solutions


Stainless steel


Multiple fluid paths


Fiber optic cable


Sewer/jetter



Reelcraft's product quality starts with modern engineering techniques for maximum strength through better design, better materials and tested and proven products. We are committed to superior manufacturing processes by producing our steel components from hard tooling (dies) that increase product strength and reliability compared with simply bending metal in press breaks. In addition, we offer more levels of industrial products: Good, Better, Best and Ultimate. Our customers report that superior value is why they choose Reelcraft reels. All of these qualities and more add up to make "The Reelcraft Difference."

Customer Service: 1.855.634.9109
All Other Calls: 1.800.444.3134

Special Powder Coat Paint Colors

Customize your reel color with special paint options

Reelcraft is most well-known for its bright red reels, but we also paint secondary colors and special order colors. Reelcraft uses a rigorous cleaning process on raw parts prior to paint. After this process is complete, parts are then coated with a high quality, durable polyester powder coat paint for a uniform, corrosion resistant finish that will last through years of service.

Reelcraft frequently paints secondary colors - white, black, blue and gray. There is no set-up charge for secondary colors, only a variable per unit charge. We thoroughly clean our booths and tools prior to painting special order colors therefore require a one-time set-up charge in addition to the variable per unit charge.



RT625-OLP-40BL



RT625-OLP-42YE



RT650-OLP-35BK



RT850-OLP

Primary Colors - NO CHARGE
Reelcraft is most well-known for its bright red reels, but we also paint gray on large frame reels at no extra charge. Gray must be specified at time of order.

Large Frame Reels

- Reelcraft Red
- Gray **39GY**

Small Frame Reels

- Reelcraft Red

Secondary Colors
Reelcraft frequently paints secondary colors. There is no set-up charge for secondary colors, only a variable per unit charge and a possible increase in lead time.

Large Frame Reels

- White **17WH** RAL 9003
- Black **35BK**
- Blue **40BL** RAL 5005
- Silver **37SR**

Small Frame Reels

- White **17WH** RAL 9003
- Black **35BK**
- Blue **40BL** RAL 5005
- Gray **39GY**

Special Order Colors
We thoroughly clean our booths/tools prior to painting special order colors and thus require a set-up charge in addition to the variable per unit charge. Contact Reelcraft for additional colors not listed. Be aware that special paint may add to lead time.

Large Frame Reels

- Gray Primer **26GY**
- Sunshine Yellow **42YE** RAL 1023
- Bronze **47BZ**
- Hunter Green **45GN** RAL 6004
- Orange **550R** RAL 2009
- Forrest Green **48GN** RAL 6006
- High Gloss Black **43BK** RAL 9005
- Burgundy **12BG** RAL 3003
- Green **20GN**

Small Frame Reels

- Silver **37SR**
- Gray Primer **26GY**
- Sunshine Yellow **42YE** RAL 1023
- Bronze **47BZ**
- High Gloss Black **43BK** RAL 9005
- Hunter Green **45GN** RAL 6004
- Orange **550R** RAL 2009
- Forrest Green **48GN** RAL 6006
- Burgundy **12BG** RAL 3003
- Green **20GN**



Made in USA

RT650-OLP
Patent No. 7,150,425

Medium Duty Spring Retractable Reels

Air/Water/Oil/Grease - 1/4", 3/8", 1/2" I.D.

Series RT is an economical choice for a medium duty, light weight, spring driven hose reel for applications that are less demanding, yet require a product that can withstand industrial and commercial use. The industrial-grade drive spring is protected from the environment in a polypropylene spool for longer service life. Guide arm adjusts to seven positions.

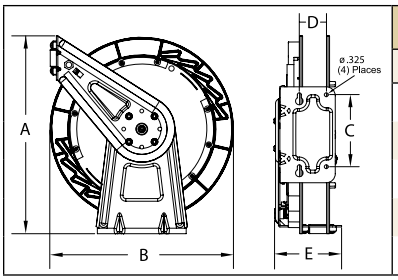

Dimensions	in	mm
A	17 7/8	454
B	16 1/2	419
C	6	152
D	2 1/4	57
E	See Chart	



Nitrogen Reels
RT650-OLPG-20GN



Model with Hose	Shipping Weight lbs	kg	Hose I.D. in	mm	Hose O.D. in	mm	Hose Length ft	m	**Max Pressure psi	bar	NPT(M) Hose Outlet in	NPT(F) Reel Inlet in	Model without hose or bumper	Shipping Weight lbs	kg	Pressure psi	bar	E in	mm
Low Pressure Air/Water Reels Maximum Temperature 150 °F (65 °C) **Maximum working pressure at 70 °F (20 °C)																			
RT425-OLP	19	9	1/4	6	.475	12	25	8	300	21	1/4	3/8	RT402-OLP	19	9	300	21	5 3/4	146
RT435-OLP	21	10	1/4	6	.475	12	35	11	300	21	1/4	3/8	RT403-OLP	19	9	300	21	5 3/4	146
RT450-OLP	24	11	1/4	6	.475	12	50	15	300	21	1/4	3/8	RT405-OLP	21	10	300	21	5 3/4	146
RT465-OLP	25	11	1/4	6	.475	12	65	20	300	21	1/4	3/8	RT406-OLP	21	10	300	21	5 3/4	146
RT625-OLP	20	9	3/8	10	.600	15	25	8	300	21	1/4	3/8	RT602-OLP	19	9	300	21	5 3/4	146
RT635-OLP	21	10	3/8	10	.600	15	35	11	300	21	1/4	3/8	RT603-OLP	19	9	300	21	5 3/4	146
RT650-OLP	27	12	3/8	10	.600	15	50	15	300	21	1/4	1/2	RT605-OLP	22	10	300	21	6 1/4	159
RT825-OLP	26	12	1/2	13	.750	19	25	8	300	21	1/2	1/2	RT802-OLP	23	10	300	21	6 1/4	159
RT835-OLP	27	12	1/2	13	.750	19	35	11	300	21	1/2	1/2	RT803-OLP	23	10	300	21	6 1/4	159
RT850-OLP	37	17	1/2	13	.750	19	50	15	300	21	1/2	1/2	RT805-OLP	25	11	300	21	7 3/4	197
Medium Pressure Oil Reels Maximum Temperature 150 °F (65 °C)																			
RT625-OMP	27	12	3/8	10	.710	18	25	8	1000	69	3/8	3/8	RT602-OMP	22	10	1000	69	5 3/4	146
RT635-OMP	30	14	3/8	10	.710	18	35	11	1000	69	3/8	3/8	RT603-OMP	22	10	1000	69	5 3/4	146
RT650-OMP	35	16	3/8	10	.710	18	50	15	1000	69	3/8	1/2	RT605-OMP	25	11	1000	69	7 3/4	197
RT825-OMP	31	14	1/2	13	.820	21	25	8	1000	69	1/2	1/2	RT802-OMP	23	10	1000	69	6 1/4	159
RT835-OMP	32	15	1/2	13	.820	21	35	11	1000	69	1/2	1/2	RT803-OMP	23	10	1000	69	6 1/4	159
High Pressure Grease Reels Maximum Temperature 150 °F (65 °C)																			
RT425-OHP	28	13	1/4	6	.580	15	25	8	5000	345	1/4	3/8	RT402-OHP	22	10	5000	345	5 3/4	146
RT435-OHP	30	14	1/4	6	.580	15	35	11	5000	345	1/4	3/8	RT403-OHP	22	10	5000	345	5 3/4	146
RT625-OHP	30	14	3/8	10	.730	19	25	8	4800	331	3/8	3/8	RT602-OHP	22	10	5000	345	5 3/4	146
RT635-OHP	34	15	3/8	10	.730	19	35	11	4800	331	3/8	1/2	RT603-OHP	22	10	5000	345	6 1/4	159
RT650-OHP	46	21	3/8	10	.730	19	50	15	4800	331	3/8	1/2	RT605-OHP	25	11	5000	345	7 3/4	197

Low pressure reels furnished standard with PVC hose. Medium pressure reels furnished standard with S.A.E. 100R1-AT (3/8") or S.A.E. 100R17 (1/2") one wire braid hose or equivalent. High pressure reels furnished standard with S.A.E. 100 R2T two wire braid hose. Reference page 4 for guide arm positions.

Prop 65: ⚠ **WARNING:**
Cancer and Reproductive Harm
www.P65Warnings.ca.gov.

Interactive Reel Catalog
Visit **www.reelcraft.com/catalog** for complete product specifications, available parts and accessories.

Models listed with an icon can ship same day upon request when the order is received by 1:00 PM Eastern Time for quantities of 10 or fewer.

- Indiana Warehouse
- California Warehouse
- Indiana & California Warehouses
- Canadian Warehouse

Customer Service: 1.855.634.9109
All Other Calls: 1.800.444.3134

Premium Duty Spring Retractable Reels

Air/Water/Oil/Grease - 1/4", 3/8", 1/2" I.D.

Series 4000, 5000 and 5005 reels are all-steel construction and compact for a wide range of applications with critical space requirements. A full flow shaft and swivel assures maximum product delivery. Guide arm adjusts to two positions.



4625 OLP 5635 OLP 5650 OLP

Made in USA



Enclosed Reels
535 ELP



Air Vend Reels
AV4425 OLPBWR

Enclosed Models: Series 5000 E reels are the same as 5000 O reels except E Series reels are fully enclosed. To order, change the model number suffix letter O to E, Example: 5430 OHP becomes 5430 EHP. Add 8 lbs. to open reel weight. Enclosed version is only available for Series 5000 reels (size index 2 reels). Refer to reelcraft.com for dimensional information.

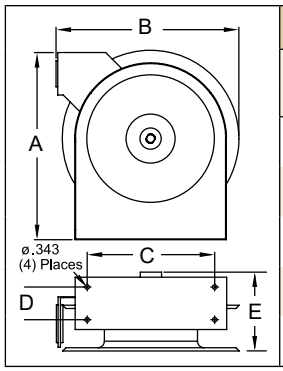

Dimensions - Size Index	1		2		3		4	
	in	mm	in	mm	in	mm	in	mm
A	12 7/8	327	14 3/8	365	17 5/8	448	17 5/8	448
B	12 5/8	321	14 1/4	362	16 3/4	425	16 3/4	425
C	8	203	9 3/4	248	9 3/4	248	9 3/4	248
D	2 1/2	64	2 1/2	64	2 1/2	64	2 1/2	64
E	5 5/8	143	6 1/8	156	5 7/8	149	7 1/4	184

NOTE: See operating instructions for optimum mounting configuration.

Quiet latch with Hose	Ratchet latch with Hose	Shipping Weight	Hose I.D.	Hose O.D.	Hose Length	**Max Pressure	NPT(M) Hose Outlet	NPT(F) Reel Inlet	Quiet latch without hose or bumper	Shipping Weight	Pressure	Size Index #
		lbs kg	in mm	in mm	ft m	psi bar	in	in		lbs kg	psi bar	
Low Pressure Air/Water Reels	Maximum temperature 150 °F (65 °C) w/hose / 210 °F (99 °C) w/o hose					**Maximum working pressure at 70 °F (20 °C)						
4420 OLP	----------	18 8	1/4 6	.475 12	20 6	300 21	1/4	3/8	**4400 OLP**	17 8	500 35	1
4425 OLP	**B4425 OLP**	19 9	1/4 6	.475 12	25 8	300 21	1/4	3/8	**4400 OLP**	17 8	500 35	1
4435 OLP	**B4435 OLP**	19 9	1/4 6	.475 12	35 11	300 21	1/4	3/8	**4400 OLP**	17 8	500 35	1
5450 OLP	**B5450 OLP**	26 12	1/4 6	.475 12	50 15	300 21	1/4	3/8	**5400 OLP**	20 9	500 35	2
4617 OLP	----------	19 9	3/8 10	.600 15	17 5	300 21	1/4	3/8	**4600 OLP**	17 8	500 35	1
4625 OLP	**B4625 OLP**	20 9	3/8 10	.600 15	25 8	300 21	1/4	3/8	**4600 OLP**	17 8	500 35	1
5635 OLP	**B5635 OLP**	25 11	3/8 10	.600 15	35 11	300 21	1/4	3/8	**5600 OLP**	21 10	500 35	2
5650 OLP	**B5650 OLP**	36 16	3/8 10	.600 15	50 15	300 21	1/4	3/8	**5605 OLP**	31 14	500 35	3
A5825 OLP	**B5825 OLP**	27 12	1/2 13	.750 19	25 8	300 21	1/2	3/8	**A5800 OLP**	22 10	500 35	2
A5835 OLP	**B5835 OLP**	39 18	1/2 13	.750 19	35 11	300 21	1/2	3/8	**A5805 OLP**	32 15	500 35	3
A5850 OLP	**B5850 OLP**	41 19	1/2 13	.750 19	50 15	300 21	1/2	3/8	**A5806 OLP**	35 16	500 35	4
Medium Pressure Oil Reels	Maximum temperature 210 °F (99 °C)											
5435 OMP	**B5435 OMP**	31 14	1/4 6	.530 13	35 11	2750 190	1/4	3/8	**5400 OMP**	23 10	3000 207	2
5630 OMP	**B5630 OMP**	31 14	3/8 10	.690 18	30 9	2600 179	3/8	3/8	**5600 OMP**	24 11	3000 207	2
A5825 OMP*	**B5825 OMP***	34 15	1/2 13	.820 21	25 8	3000 207	1/2	3/8	**A5800 OMP**	24 11	3000 207	2
A5835 OMP	**B5835 OMP**	42 19	1/2 13	.820 21	35 11	3000 207	1/2	3/8	**A5805 OMP**	32 15	3000 207	3
High Pressure Grease Reels	Maximum temperature 210 °F (99 °C)											
5430 OHP	----------	30 14	1/4 6	.580 15	30 9	5000 345	1/4	1/4	**5400 OHP**	23 10	5000 345	2
5435 OHP	**B5435 OHP**	39 18	1/4 6	.580 15	35 11	5000 345	1/4	1/4	**5405 OHP**	33 15	5000 345	3
5625 OHP	**B5625 OHP**	32 15	3/8 10	.730 19	25 8	4800 331	1/4	1/4	**5600 OHP**	26 12	5000 345	2

***Floor tank mount only - do not mount on ceiling.** Low pressure reels furnished standard with PVC hose. Compressed air hoses should not be converted to oxygen service - may cause explosion when O_2 mixes with fuel. Medium pressure reels furnished standard with S.A.E. 100R1-AT (1/4" and 3/8") or S.A.E. 100R17 (1/2") one wire braid hose. High pressure reels furnished standard with S.A.E. 100 R2T two wire braid hose. Reference page 4 for guide arm positions.

Models listed with an icon can ship same day upon request when the order is received by 1:00 PM Eastern Time for quantities of 10 or fewer.

- Indiana Warehouse
- California Warehouse
- Indiana & California Warehouses
- Canadian Warehouse

Interactive Reel Catalog
Visit **www.reelcraft.com/catalog** for complete product specifications, available parts and accessories.

Prop 65: ⚠ WARNING:
Cancer and Reproductive Harm
www.P65Warnings.ca.gov.



7850 OLP

Made in USA

Heavy Duty Spring Retractable Hose Reels

Air/Water/Oil/Grease - 1/4", 3/8", 1/2", 3/4" I.D.

Series 7000 is very robust and ideal for the most demanding applications. The reel's base and guide arm are formed from high-grade steel and engineered with structural forms and gussets to yield the greatest amount of strength. The standard low pressure hose is for air or water service only. The basic reel without hose can be used for air, water or oil. Consult Reelcraft for other products and hoses. Guide arm adjusts to 7 positions.

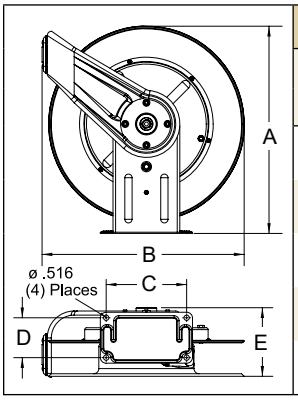

Dimensions	7000 O		7000 E	
	in	mm	in	mm
A	20 1/4	514	20 7/8	530
B	19 3/4	502	21 1/8	537
C	7 13/16	198	7 13/16	198
D	3 7/8	98	3 7/8	98
E	7	178	7 5/8	194

For all metric thread connections over 1/2" add the suffix number 70 to indicate BSPT threads - example 7900 OLP70.

Applications

- Industrial
- Automotive service centers
- Transmission shops
- Fleet maintenance facilities
- Pneumatic tools
- Aircraft maintenance
- Tire stores
- Agriculture
- Service trucks
- Wash down

Enclosed Reels
7650 ELP



Series 7000 E reels are the same as 7000 O reels except **E Series reels are fully enclosed.** To order, change the model number suffix letter O to E. Example, 7650 OHP becomes 7650 EHP. Add 17 lbs. to open reel weight.

Model with Hose	Shipping Weight lbs	kg	Hose I.D. in	mm	Hose O.D. in	mm	Hose Length ft	m	**Max Pressure psi	bar	NPT(M) Hose Outlet in	NPT(F) Reel Inlet in	Model without hose & bumper	Shipping Weight lbs	kg	Pressure psi	bar
Low Pressure Air/Water Reels Maximum temperature 150 °F (65 °C) w/hose / 210 °F (99 °C) w/o hose **Maximum working pressure at 70 °F (20 °C)																	
7650 OLP	43	20	3/8	10	.600	15	50	15	300	21	1/4	1/2	**7600 OLP**	40	18	500	35
7670 OLP	47	21	3/8	10	.600	15	70	22	300	21	1/4	1/2	**7607 OLP**	40	18	500	35
7850 OLP	47	21	1/2	13	.750	19	50	15	300	21	3/8	1/2	**7800 OLP**	41	19	500	35
7850 OLP121	47	21	1/2	13	.750	19	50	15	300	21	1/2	1/2	**7800 OLP**	41	19	500	35
7850 OLPSW57	47	21	1/2	13	.750	19	50	15	300	21	3/4 NH	1/2	**7800 OLP**	41	19	500	35
7925 OLP	47	21	3/4	19	1.075	27	25	8	250	17	3/4	3/4	**7900 OLP**	44	20	500	35
F7925 OLP*	47	21	3/4	19	1.075	27	25	8	50	3	3/4	3/4	**F7900 OLP**	45	20	500	35
Medium Pressure Oil Reels Maximum temperature 210 °F (99 °C)																	
7650 OMP	55	25	3/8	10	.690	18	50	15	2600	179	3/8	1/2	**7600 OMP**	43	20	3000	207
7850 OMP	57	26	1/2	13	.820	21	50	15	3000	207	1/2	1/2	**7800 OMP**	43	20	3000	207
High Pressure Grease Reels Maximum temperature 210 °F (99 °C)																	
7450 OHP	55	25	1/4	6	.580	15	50	15	5000	345	1/4	1/2	**7400 OHP**	43	20	5000	345
7650 OHP	60	27	3/8	10	.730	19	50	15	4800	331	1/4	1/2	**7600 OHP**	46	21	5000	345

Low pressure reels furnished standard with PVC hose. Medium pressure reels furnished standard with S.A.E. 100R1-AT (3/8") or S.A.E. 100R17 (1/2") one wire braid hose. High pressure reels furnished standard with S.A.E. 100 R2T two wire braid hose. For hydraulic or other applications please consult manufacturer. *Series F7925 OLP supplied with UL330 and UCL approved fuel grade hose with a 250 psi (17 bar) minimum burst. Reference page 4 for guide arm positions.

Prop 65: ⚠ WARNING:
Cancer and Reproductive Harm
www.P65Warnings.ca.gov.

Interactive Reel Catalog
Visit **www.reelcraft.com/catalog** for complete product specifications, available parts and accessories.

Models listed with an icon can ship same day upon request when the order is received by 1:00 PM Eastern Time for quantities of 10 or fewer.

- Indiana Warehouse
- California Warehouse
- Indiana & California Warehouses
- Canadian Warehouse

Customer Service: 1.855.634.9109
All Other Calls: 1.800.444.3134

Heavy Duty Spring Retractable Hose Reels

Air/Water/Oil/Grease - 1/4", 3/8", 1/2" I.D.

Reelcraft's new compact dual pedestal Series DP5000 and DP7000 feature an innovative, non-welded, interlocking base. Independent testing to military standards has proven the reel stand up to heavy vibration, which makes them especially strong and ideal for truck-mounted applications. Superbly engineered dual pedestal base and guide arm are structurally reinforced. All-steel construction and a baked-on powder coat finish combine to produce a rugged corrosion-resistant product suitable for a wide variety of heavy duty applications.



DP5835 OLP

Made in USA



DP7850 OLP

Meets or exceeds military vibration for Truck Transport test

MIL-STD-810F

500,000 mile equivalent

- ✓ **Superior corrosion-resistance** A double adhesive gasket seals the spring case.
- ✓ **Ease of operation** - The latch pawl is mounted on the guide arm to prevent latch out at full extension.

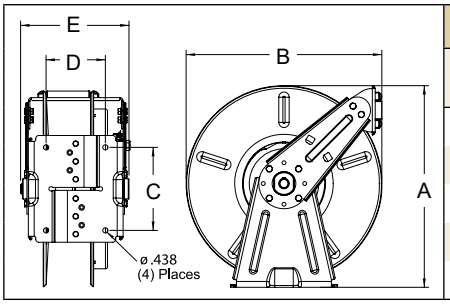

Dimensions - Size Index	1		2		3		4	
	in	mm	in	mm	in	mm	in	mm
A	16 3/8	416	16 3/8	416	17	432	17	432
B	14 3/8	365	14 3/8	365	16 1/2	419	16 1/2	419
C	7	178	7	178	7	178	7	178
D	4	102	5	127	4	102	5	127
E	8	203	9	229	8	203	9	229

Model with Hose	Shipping Weight		Hose I.D.		Hose O.D.		Hose Length		**Max Pressure		NPT(M) Hose Outlet	NPT(F) Reel Inlet	Model without hose & bumper	Shipping Weight		Pressure		Size Index #
	lbs	kg	in	mm	in	mm	ft	m	psi	bar	in	in		lbs	kg	psi	bar	
Low Pressure Air/Water Reels	Maximum temperature 150 °F (65 °C) w/hose / 210 °F (99 °C) w/o hose								**Maximum working pressure at 70 °F (20 °C)									
DP5435 OLP	34	15	1/4	6	.475	12	35	11	300	21	1/4	1/2	**DP5400 OLP**	29	13	500	35	1
DP5450 OLP	37	17	1/4	6	.475	12	50	15	300	21	1/4	1/2	**DP5400 OLP**	29	13	500	35	1
DP7450 OLP	46	21	1/4	6	.475	12	50	15	300	21	1/4	1/2	**DP7400 OLP**	44	20	500	35	3
DP5635 OLP	41	19	3/8	10	.600	15	35	11	300	21	1/4	1/2	**DP5600 OLP**	37	17	500	35	1
DP5650 OLP	44	20	3/8	10	.600	15	50	15	300	21	1/4	1/2	**DP5605 OLP**	38	17	500	35	2
DP7650 OLP	50	23	3/8	10	.600	15	50	15	300	21	1/4	1/2	**DP7600 OLP**	44	20	500	35	3
DP5835 OLP	52	24	1/2	13	.750	19	35	11	300	21	3/8	1/2	**DP5800 OLP**	38	17	500	35	2
DP7850 OLP	53	24	1/2	13	.750	19	50	15	300	21	3/8	1/2	**DP7800 OLP**	45	20	500	35	4
DP7850 OLP121	53	24	1/2	13	.750	19	50	15	300	21	1/2	1/2	**DP7800 OLP**	45	20	500	35	4
Medium Pressure Oil Reels	Maximum temperature 210 °F (99 °C)																	
DP7650 OMP	55	25	3/8	10	.690	18	50	15	2600	179	3/8	1/2	**DP7600 OMP**	45	20	3000	207	3
DP5835 OMP	54	24	1/2	13	.820	21	35	11	3000	207	1/2	1/2	**DP5800 OMP**	40	18	3000	207	2
DP7850 OMP	64	29	1/2	13	.820	21	50	15	3000	207	1/2	1/2	**DP7800 OMP**	45	20	3000	207	4
High Pressure Grease Reels	Maximum temperature 210 °F (99 °C)																	
DP7450 OHP	59	27	1/4	6	.580	15	50	15	5000	345	1/4	1/2	**DP7400 OHP**	44	20	5000	345	3
DP5635 OHP	43	20	3/8	10	.730	19	35	11	4800	331	3/8	1/2	**DP5600 OHP**	40	18	5000	345	2
DP7650 OHP	65	29	3/8	10	.730	19	50	15	4800	331	1/4	1/2	**DP7600 OHP**	46	21	5000	345	3

Low pressure reels furnished standard with PVC hose. Medium pressure reels furnished standard with S.A.E. 100R1-AT (3/8") or S.A.E. 100R17 (1/2") one wire braid hose. High pressure reels furnished standard with S.A.E. 100 R2T two wire braid hose. Reference page 4 for guide arm positions.

Models listed with an icon can ship same day upon request when the order is received by 1:00 PM Eastern Time for quantities of 10 or fewer.

IN Indiana Warehouse
CA California Warehouse
IN CA Indiana & California Warehouses
Canadian Warehouse

Interactive Reel Catalog

Visit **www.reelcraft.com/catalog** for complete product specifications, available parts and accessories.

Prop 65: ⚠ **WARNING:** Cancer and Reproductive Harm www.P65Warnings.ca.gov.

Heavy Duty Mobile Base Hose Reels | Series HD70000



HD76100 OLP

Heavy Duty Spring Retractable Reels

Air/Water/Oil/Grease - 1/4", 3/8", 1/2", 3/4" I.D.

Reelcraft's new Series HD70000 hose reels are designed to accommodate up to 100' of 3/8" I.D. hose or 75' of 1/2" I.D. hose. The heavy duty base design, all steel construction and a baked-on powder coat finish combine to produce a rugged, corrosion-resistant product. A newly redesigned latching mechanism provides longer service life of the latch components. The one piece guide roller design and stainless steel pins offer greater strength and easier serviceability. The high quality, die cast aluminum hub and two sealed ball bearings produce a smoother spool rotation and easier operation.

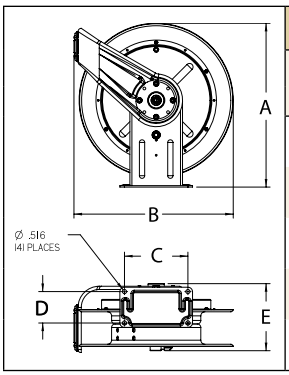

Dimensions - Size Index	1		2	
	in	mm	in	mm
A	20 1/4	514	20 1/4	514
B	19 3/4	502	19 3/4	502
C	7 13/16	198	7 13/16	198
D	3 7/8	98	3 7/8	98
E	7	178	8 1/4	210

- **Compact design** - Reels are 25% smaller than our heavy duty Series 80000 reels.
- **Drive spring** - The containerized drive spring offers easier handling during maintenance (size index 2 models only).
- **Versatility** - The guide arm adjusts to seven different positions for versatile mounting and a wide range of applications.

Made in USA

Model with Hose	Shipping Weight		Hose I.D.		Hose O.D.		Hose Length		**Max Pressure		NPT(M) Hose Outlet	NPT(F) Reel Inlet	Model without hose & bumper	Shipping Weight		Pressure		Size Index #
	lbs	kg	in	mm	in	mm	ft	m	psi	bar	in	in		lbs	kg	psi	bar	
Low Pressure Air/Water Reels	Maximum temperature 150 °F (65 °C) w/hose / 210 °F (99 °C) w/o hose								**Maximum working pressure at 70 °F (20 °C)									
HD76050 OLP	45	20	3/8	10	.600	15	50	15	300	21	1/4	1/2	**HD76000 OLP**	42	19	500	35	1
HD76070 OLP	49	22	3/8	10	.600	15	70	21	300	21	1/4	1/2	**HD76000 OLP**	42	19	500	35	1
HD76075 OLP	65	29	3/8	10	.600	15	75	23	300	21	1/4	1/2	**HD76005 OLP**	56	25	500	35	2
HD76100 OLP	75	34	3/8	10	.600	15	100	30	300	21	1/4	1/2	**HD76005 OLP**	56	25	500	35	2
HD78050 OLP	49	22	1/2	13	.750	19	50	15	300	21	3/8	1/2	**HD78000 OLP**	43	20	500	35	1
HD78075 OLP	73	33	1/2	13	.750	19	75	23	300	21	3/8	1/2	**HD78005 OLP**	58	26	500	35	2
HD79025 OLP	49	27	3/4	19	1.075	27	25	8	250	17	3/4	3/4	**HD79000 OLP**	46	21	500	35	1
Medium Pressure Oil Reels	Maximum temperature 210 °F (99 °C)																	
HD76050 OMP	57	26	3/8	10	.690	18	50	15	2600	179	3/8	1/2	**HD76000 OMP**	45	20	3000	207	1
HD76075 OMP	85	39	3/8	10	.690	18	75	23	2600	179	3/8	1/2	**HD76005 OMP**	60	27	3000	207	2
HD78050 OMP	59	27	1/2	13	.820	21	50	15	3000	207	1/2	1/2	**HD78000 OMP**	43	20	3000	207	1
HD78065 OMP	78	35	1/2	13	.820	21	65	20	3000	207	1/2	1/2	**HD78005 OMP**	60	27	3000	207	2
High Pressure Grease Reels	Maximum temperature 210 °F (99 °C)																	
HD74050 OHP	57	26	1/4	6	.580	15	50	15	5000	345	1/4	1/2	**HD74000 OHP**	45	20	5000	345	1
HD74075 OHP	80	36	1/4	6	.580	15	75	23	5000	345	1/4	1/2	**HD74005 OHP**	60	27	5000	345	2
HD74100 OHP	86	39	1/4	6	.580	15	100	30	5000	345	1/4	1/2	**HD74005 OHP**	60	27	5000	345	2
HD76050 OHP	62	28	3/8	10	.730	19	50	15	4800	331	1/4	1/2	**HD76000 OHP**	48	22	5000	345	1
HD76075 OHP	90	41	3/8	10	.730	19	75	23	4800	331	1/4	1/2	**HD76005 OHP**	60	27	5000	345	2

Low pressure reels furnished standard with PVC hose. Medium pressure reels furnished standard with S.A.E. 100R1-AT (3/8") or S.A.E. 100R17 (1/2") one wire braid hose. High pressure reels furnished standard with S.A.E. 100 R2T two wire braid hose. Reference page 4 for guide arm positions.

Prop 65: ⚠ **WARNING:** Cancer and Reproductive Harm www.P65Warnings.ca.gov.

Interactive Reel Catalog
Visit **www.reelcraft.com/catalog** for complete product specifications, available parts and accessories.

Models listed with an icon can ship same day upon request when the order is received by 1:00 PM Eastern Time for quantities of 10 or fewer.

- Indiana Warehouse
- California Warehouse
- Indiana & California Warehouses
- Canadian Warehouse

Customer Service: 1.855.634.9109
All Other Calls: 1.800.444.3134

Heavy Duty Spring Retractable Reels

Air/Water/Oil/Grease - 3/8", 1/2", 3/4", 1" I.D.

Reelcraft's Series 80000 and D80000 spring retractable reels incorporate the most current design and manufacturing techniques to increase service life and performance. The all-steel construction and a baked-on powder coat finish combine to produce a rugged, corrosion-resistant product suitable for a wide variety of heavy duty applications. Series D80000 reels are also supplied with Reelcraft's ball-bearing style swivel.



82100 OLP

Made in USA

Features

- ✓ Guide arm is field adjustable for wall, ceiling, or truck mounting positions.
- ✓ Dual pedestal base and guide arm design are structurally reinforced.
- ✓ Five-in-one, heat-treated aluminium casting incorporates main shaft, ratchet, spring arbor and inlet/outlet plumbing in one-piece casting.
- ✓ Containerized spring assembly provides safer and easier handling during maintenance.
- ✓ Two sealed ball bearings for smooth rotation of main shaft.

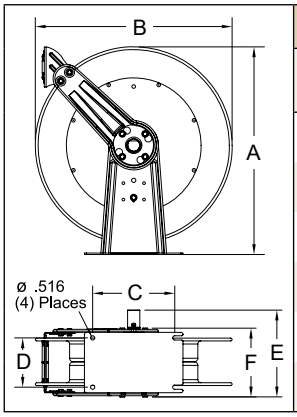

Dimensions - Size Index	1		2		3	
	in	mm	in	mm	in	mm
A	25 3/8	645	25 3/8	645	25 3/8	645
B	24	610	24	610	24	610
C	10	254	10 1/2	267	10 1/2	267
D	6	152	7 7/8	200	7 7/8	200
E	10 1/2	267	13	330	15 3/4	400
F	8 1/8	206	10 3/8	264	10 3/8	264

Model with Hose	Shipping Weight		Hose I.D.		Hose O.D.		Hose Length		**Max Pressure		NPT(M) Hose Outlet	NPT(F) Reel Inlet	Model without hose & bumper	Shipping Weight		Pressure		Size Index #
	lbs	kg	in	mm	in	mm	ft	m	psi	bar	in	in		lbs	kg	psi	bar	
Low Pressure Air/Water Reels Maximum temperature 150 °F (65 °C) w/hose / 210 °F (99 °C) w/o hose **Maximum working pressure at 70 °F (20 °C)																		
81075 OLP	76	34	3/8	10	.600	15	75	23	300	21	3/8	1/2	**81000 OLP**	77	35	500	35	1
81100 OLP	82	37	3/8	10	.600	15	100	30	300	21	3/8	1/2	**81000 OLP**	77	35	500	35	1
82075 OLP	87	39	1/2	13	.750	19	75	23	300	21	1/2	1/2	**82000 OLP**	82	37	500	35	1
82100 OLP	95	43	1/2	13	.750	19	100	30	300	21	1/2	1/2	**82000 OLP**	82	37	500	35	1
83050 OLP	88	40	3/4	19	1.075	27	50	15	250	17	3/4	3/4	**83000 OLP**	77	35	500	35	1
F83050 OLP*	89	41	3/4	19	1.075	27	50	15	50	3	3/4	3/4	**F83000 OLP**	74	34	500	35	1
D83075 OLP	102	46	3/4	19	1.075	27	75	23	250	17	3/4	3/4	**D83000 OLP**	83	38	500	35	2
D84035 OLP	97	44	1	25	1.375	35	35	11	250	17	3/4	1	**D84000 OLP**	91	41	500	35	3
D84050 OLP	103	47	1	25	1.375	35	50	15	250	17	3/4	1	**D84000 OLP**	91	41	500	35	3
Medium Pressure Oil Reels Maximum temperature 210 °F (99 °C)																		
82075 OMP	101	46	1/2	13	.850	22	75	23	2000	138	1/2	1/2	**82000 OMP**	82	37	3000	207	1
82100 OMP	109	49	1/2	13	.850	22	100	30	3000	207	1/2	1/2	**82000 OMP**	82	37	3000	207	1
83050 OMP	98	44	3/4	19	1.188	30	50	15	1250	86	3/4	3/4	**83000 OMP**	84	38	1500	103	1
D84050 OMP	122	55	1	25	1.400	36	50	15	1275	88	1	1	**D84000 OMP**	86	39	1500	103	3
High Pressure Grease Reels Maximum temperature 210 °F (99 °C)																		
81075 OHP	111	50	3/8	10	.730	19	75	23	4800	331	3/8	3/8	**81000 OHP**	85	39	5000	345	1
81100 OHP	127	58	3/8	10	.730	19	100	30	4800	331	3/8	3/8	**81000 OHP**	85	39	5000	345	1

*Model F83050 OLP equipped with UL330 and ULC approved fuel grade hose. 250 psi (17 bar) minimum burst. For all metric thread connections over 1/2" add the suffix number 70 to indicate BSPT threads - example 83050 OLP70. Low pressure reels furnished standard with PVC hose. Medium pressure reels are furnished standard with S.A.E. 100R17 (1/2"), S.A.E. 100R1-AT (3/4"), or S.A.E. 100R1 (1") one wire braid hose. High pressure reels furnished standard with SAE 100 R2T two wire braid hose. See page 18 for gasoline and diesel fuel models. Reference page 4 for guide arm positions.

Models listed with an icon can ship same day upon request when the order is received by 1:00 PM Eastern Time for quantities of 10 or fewer.

Indiana Warehouse
California Warehouse
Indiana & California Warehouses
Canadian Warehouse

Interactive Reel Catalog
Visit **www.reelcraft.com/catalog** for complete product specifications, available parts and accessories.

Prop 65: ⚠ **WARNING:** Cancer and Reproductive Harm www.P65Warnings.ca.gov.

Low Profile Hose Reels | Series SD10000



SD13050 OLP

Spring Retractable Low Profile Reels

Air/Water/Oil/Vacuum Recovery - 3/4", 1" I.D.

Series SD10000 hose reels are designed to facilitate larger diameter 3/4" and 1" hose up to 50 ft. They feature a high quality external drive spring and a heavy gauge all-bolted together frame. The containerized external drive spring assembly offers easier handling during maintenance. This is the most compact reel in its class, making it ideal for mounting in truck cabinets or other areas where space is limited.

Features

- ✓ Reel features extreme space saving design, ideal for applications with minimal space constraints.
- ✓ Reel is built with high quality industrial grade components for superior strength and design.

Specifications

- High impact UHMW guide rollers
- Corrosion resistant powder coat paint
- 1 3/8" solid main shaft
- Four 5/8" tie rods maintain reel integrity and provide added support
- Ultra low profile design for mounting in cabinetry
- Ductile iron fluid path parts
- Stainless latch spring and widened aluminum ratchet/pawl
- Torsion spring for longer service life

Made in USA

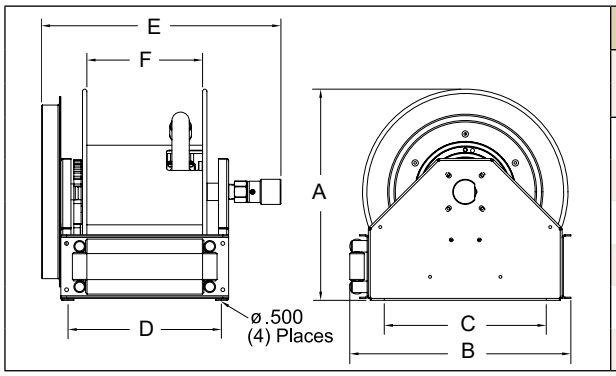

Size Index	1		2	
	in	mm	in	mm
A	18 1/4	464	18 1/4	464
B	19 1/8	486	19 1/8	486
C	14	356	14	356
D	11 1/4	286	13 1/4	337
E	18 3/4	476	20 3/4	527
F	8	203	10	254

All models are bottom wind unless otherwise specified. Additional bracket required for other guide arm positions.

Model with Hose	Shipping Weight		Hose I.D.		Hose O.D.		Hose Length		**Max Pressure		NPT(M) Hose Outlet	NPT(F) Reel Inlet	Model without hose & bumper	Shipping Weight		Pressure		Size Index #
	lbs	kg	in	mm	in	mm	ft	m	psi	bar	in	in		lbs	kg	psi	bar	
Low Pressure Air/Water Reels Maximum temperature 150 °F (65 °C) w/hose / 210 °F (99 °C) w/o hose **Maximum working pressure at 70 °F (20 °C)																		
SD13035 OLP	95	43	3/4	19	1.188	30	35	11	250	17	3/4	1	**SD13000 OLP**	85	39	500	35	1
SD13050 OLP	105	48	3/4	19	1.188	30	50	15	250	17	3/4	1	**SD13000 OLP**	85	39	500	35	1
SD14035 OLP	102	46	1	25	1.375	35	35	11	250	17	3/4	1	**SD14000 OLP**	85	39	500	35	1
SD14050 OLP	125	57	1	25	1.375	35	50	15	250	17	3/4	1	**SD14005 OLP**	92	42	500	35	2
Medium Pressure Oil Reels Maximum temperature 210 °F (99 °C)																		
SD13035 OMP	95	43	3/4	19	1.188	30	35	11	1250	86	3/4	1	**SD13000 OMP**	85	39	3000	207	1
SD13050 OMP	105	48	3/4	19	1.188	30	50	15	1250	86	3/4	1	**SD13000 OMP**	85	39	3000	207	1
Vacuum Recovery Reels Maximum temperature 210 °F (99 °C)																		
SD13035 OVP	95	43	3/4	19	1.260	32	35	11	28 Hg~300 psi		3/4	1	**SD13000 OVP**	85	39	28 Hg~300 psi		1
SD13050 OVP	105	48	3/4	19	1.260	32	50	15	28 Hg~300 psi		3/4	1	**SD13000 OVP**	85	39	28 Hg~300 psi		1
SD14035 OVP	102	46	1	25	1.496	38	35	11	28 Hg~250 psi		1	1	**SD14000 OVP**	85	39	28 Hg~300 psi		1
SD14050 OVP	125	57	1	25	1.496	38	50	15	28 Hg~250 psi		1	1	**SD14005 OVP**	92	42	28 Hg~300 psi		2

NOTE: Vacuum recovery reel capacities based on using SAE 100 R4 hose or equivelant. Maximum O.D. is 1.500".

Prop 65: ⚠ WARNING:
Cancer and Reproductive Harm
www.P65Warnings.ca.gov.

Interactive Reel Catalog

Visit **www.reelcraft.com/catalog** for complete product specifications, available parts and accessories.

Models listed with an icon can ship same day upon request when the order is received by 1:00 PM Eastern Time for quantities of 10 or fewer.

- Indiana Warehouse
- California Warehouse
- Indiana & California Warehouses
- Canadian Warehouse

Customer Service: 1.855.634.9109
All Other Calls: 1.800.444.3134

Ultimate Duty Spring Retractable Reels

Air/Water/Oil/Grease - 3/8", 1/2", 3/4", 1", 1 1/4", 1 1/2" I.D.

Series 9000 mobile base reels offer the greatest amount of stability for high volume air, water, diesel fuel and gasoline. Ideal for portable service trucks, permanent service or plant work areas. A durable baked-on powder coat finish produces a rugged corrosion resistant product suitable for a wide variety of heavy duty applications. Basic reels without hose will handle air, water or oil; consult Reelcraft for other applications.

Made in USA



D9350 OLPBW

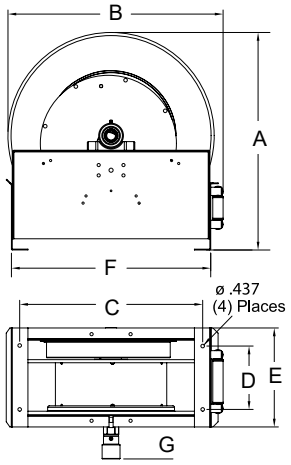

Dimensions - Size Index

	1		2		3		4	
	in	mm	in	mm	in	mm	in	mm
A	26 3/8	670	26 3/8	670	26 3/8	670	26 1/4	667
B	26 1/4	667	26 1/4	667	26 1/4	667	25	635
C	22 1/4	565	22 1/4	565	22 1/4	565	22	559
D	7 3/4	197	13 1/2	343	7 3/4	197	9 1/2	241
E	12	305	17 3/4	451	13 3/8	340	17 1/4	438
F	24 1/8	613	24 1/8	613	24 1/8	613	24 1/4	616
G	4 3/4	121	3 7/8	98	4 1/2	114	3 7/8	98

Hose Guide Roller Position

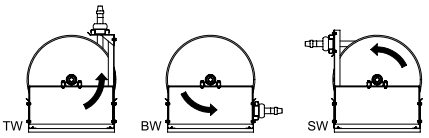

RIGHT HAND INLET | RIGHT HAND INLET | LEFT HAND INLET

A suffix code (see diagram) must be added after the model number to specify desired position. Reels are shipped in the BW position unless specified otherwise. FF9500/9600 in BW only.

***Series G9000 reels have an external drive spring and a removable gooseneck.**

Model with Hose	Shipping Weight		Hose I.D.		Hose O.D.		Hose Length		**Max Pressure		NPT(M) Hose Outlet	NPT(F) Reel Inlet	Model without hose & bumper	Shipping Weight		Pressure		Size Index
	lbs	kg	in	mm	in	mm	ft	m	psi	bar	in	in		lbs	kg	psi	bar	#
Low Pressure Air/Water Reels Maximum temperature 150 °F (65 °C) w/hose / 210 °F (99 °C) w/o hose **Maximum working pressure at 70 °F (20 °C)																		
D9275 OLP	122	55	1/2	13	.750	19	75	23	300	21	1/2	1/2	**D9200 OLP**	115	52	500	35	1
D9299 OLP	127	58	1/2	13	.750	19	100	30	300	21	1/2	1/2	**D9205 OLP**	115	52	500	35	1
D9350 OLP	140	64	3/4	19	1.075	27	50	15	250	17	3/4	3/4	**D9300 OLP**	115	52	500	35	1
D9375 OLP	152	69	3/4	19	1.075	27	75	23	250	17	3/4	3/4	**D9300 OLP**	115	52	500	35	1
D9399 OLPBW	143	65	3/4	19	1.075	27	100	30	250	17	3/4	3/4	**D9305 OLPBW**	115	52	500	35	3
D9450 OLP	157	71	1	25	1.375	35	50	15	250	17	3/4	1	**D9400 OLP**	115	52	500	35	1
D9465 OLPBW	164	74	1	25	1.375	35	65	20	250	17	3/4	1	**D9405 OLPBW**	115	52	500	35	3
Not available with hose			1 1/4	32	1.750	44	50	15	---	---	------	1 1/2	**FF9500 OLPBW** CA	125	57	600	41	2
Not available with hose			1 1/2	38	2.000	51	50	15	---	---	------	1 1/2	**FF9600 OLPBW** QS	135	61	600	41	2
Medium Pressure Oil Reels Maximum temperature 210 °F (99 °C)																		
D9275 OMP	131	59	1/2	13	.820	21	75	23	3000	207	1/2	1/2	**D9200 OMP**	117	53	3000	207	1
D9350 OMP	142	64	3/4	19	1.188	30	50	15	1250	86	3/4	3/4	**D9300 OMP**	117	53	3000	207	1
Not available with hose			3/4	19	1.188	30	75	23	---	---	------	3/4	**G9300 OMPBW***	160	73	3000	207	4
E9450 OMP	160	73	1	25	1.480	38	50	15	3000	207	1	1	**E9400 OMP**	120	54	3000	207	1
Not available with hose			1	25	1.480	38	75	23	---	---	------	1	**G9400 OMPBW***	159	72	3000	207	4
High Pressure Grease Reels Maximum temperature 210 °F (99 °C)																		
D9175 OHP	153	69	3/8	10	.730	19	75	23	4800	331	3/8	1/2	**D9100 OHP**	118	54	5000	345	1

Low pressure reels furnished standard with PVC hose. Medium pressure reels are furnished standard with S.A.E. 100R17 (1/2" and 1") or S.A.E. 100R1-AT (3/4") one wire braid hose. High pressure reels furnished standard with S.A.E. 100 R2T two wire braid hose. **Note: Change prefix from D to E to specify our heavy duty model with larger spring capacity, needle style bearings, additional seals and grease fittings. Not available on FF9000 or G9000.**

Models listed with an icon can ship same day upon request when the order is received by 1:00 PM Eastern Time for quantities of 10 or fewer.

IN Indiana Warehouse
CA California Warehouse
IN CA Indiana & California Warehouses
Canadian Warehouse

Interactive Reel Catalog
Visit **www.reelcraft.com/catalog** for complete product specifications, available parts and accessories.

Prop 65: ⚠ WARNING:
Cancer and Reproductive Harm
www.P65Warnings.ca.gov.

Twin hose models are available as standard.



Made in USA

Nordic Series 4800

Spring Driven Large Frame Reels

Nordic Series 3100 & 4800

1/2", 3/4", 1" or 1 1/2" Fluid Path for 1/2" through 1 1/2" I.D. Hose

Inlet: 1/2" up to 1" female/male NPT 90° swivel joint.

Gooseneck: 1/2" up to 1" female/male NPT. **Series 3100** reels handle hose from 1/4" through 1" I.D. **Series 4830** reels handle hose from 1/2" through 1" I.D. Inlet is 1/2" up to 1" female/male NPT 90° swivel joint. Gooseneck is 1/2" up to 1" female/male NPT. **Series 4800** reels handle hose from 1" through 1 1/2" I.D. 2" straight grooved fitting x 1 1/2" NPT female inlet is standard. Gooseneck is 1" to 1 1/2" female/male NPT.

Roller position: You must specify roller position BW, SW or TW. If roller position is not specified, reels will be shipped with rollers in position BW, see page 15.

Dimensions Diagram

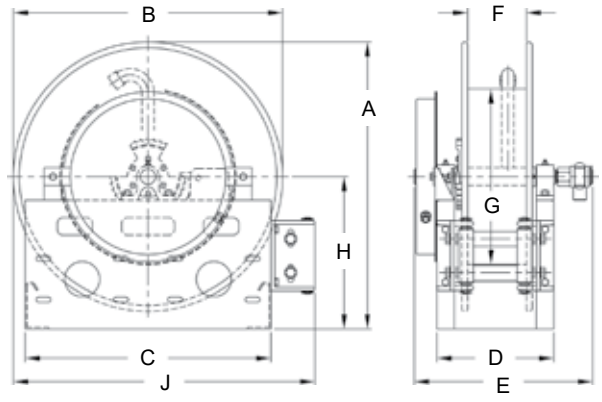

Series 3100 / 4830 product temperatures from -50 °F to +225 °F and standard pressures to 3000 psi. **Series 4800** product temperatures from -50 °F to +225 °F at standard pressures to 300 psi for 2" and 600 psi for 1 1/2" I.D. hose. Reels to operate at other temperatures or pressures can be furnished at extra cost. Consult manufacturer. The standard color for this series is red or gray.

Hose stop: A hose stop should be used to prevent damage to rollers and nozzles and to permit adjustment of free hose length. Hose stops are available at extra cost.

Note: Other sizes and/or threads can be furnished for gooseneck when specified.

Hose I.D.	in	1/2	3/4	1	1 1/4	1 1/2
	mm	13	19	25	32	38
Hose O.D.	in	7/8	1 9/32	1 9/16	1 13/16	2 1/16
	mm	22	33	40	46	52

Specification - Hose Capacity and Reel Dimensions
*20" (508 mm) diameter drum on Model #4830-31-10 for ½" and ¾" hose

Model		Hose Length					Est. Weight		A	B	C	D	E	F	G	H	J
3101-19-4	ft	30	25	15			90 LB	in	22.5	19	21	9	15.5	4	11.25	13	25
	m	9	8	5			41 KG	mm	572	483	533	229	394	102	286	330	635
3101-23-4	ft	60	40	25			93 LB	in	24.5	23	21	9	15.5	4	11.25	13	26
	m	18	12	8			42 KG	mm	622	584	533	229	394	102	286	330	660
3101-23-6	ft	100	65	60			95 LB	in	24.5	23	21	11	17.5	6	11.25	13	26
	m	30	20	18			43 KG	mm	622	584	533	279	445	152	286	330	660
3101-23-8	ft	100	65	60			97 LB	in	24.5	23	21	13	19.5	8	11.25	13	26
	m	30	20	18			44 KG	mm	622	584	533	330	495	203	286	330	660
4830-31-5X	ft	75	75	65			122 LB	in	33	31	30	10.5	17	5.5	20	17.5	34.5
	m	23	23	20			55 KG	mm	838	787	762	267	432	140	508	445	876
4830-31-8	ft	80	80	90			125 LB	in	33	31	30	13	19.5	8	15	17.5	34.5
	m	24	24	27			57 KG	mm	838	787	762	330	495	203	381	445	876
4830-31-10	ft	*90	*100	100			128 LB	in	33	31	30	15	21.5	10	*15	17.5	34.5
	m	*27	*30	30			58 KG	mm	838	787	762	381	546	254	*381	445	876
4800-31-6	ft			70	50	40	122 LB	in	33	31	30	11.44	17	6	11.25	17.5	34.5
	m			21	15	12	55 KG	mm	838	787	762	291	432	152	286	445	876
4800-31-8	ft			75	75	50	125 LB	in	33	31	30	13.44	19	8	11.25	17.5	34.5
	m			23	23	15	57 KG	mm	838	787	762	341	483	203	286	445	876

Prop 65: ⚠ **WARNING:**
Cancer and Reproductive Harm - www.P65Warnings.ca.gov.

Model numbers are representative.
Final part number assigned upon quote.

Customer Service: 1.855.634.9109
All Other Calls: 1.800.444.3134

Twin Hose, Spring Retractable Reels

Dual Hydraulic - 1/4", 3/8", 1/2" I.D.

Reelcraft's hydraulic reels are used for medium pressure dual hydraulic hose applications and are ideal for operating hydraulic cylinders, tools and equipment. All twin hydraulic models include a full flow, high volume swivel for maximum product delivery. Series TH reels incorporate contemporary engineering and manufacturing techniques for high quality performance. Reels are all-steel construction and compact for applications with critical space requirements.



Made in USA

TH5425 OMP



TH7445 OMP

Applications

- Cranes
- Construction equipment
- Hydraulic tools
- Vehicle extraction tools
- Aerial device
- Hydraulic cylinders
- Tree cutters
- Digger derricks
- Railroad maintenance tools

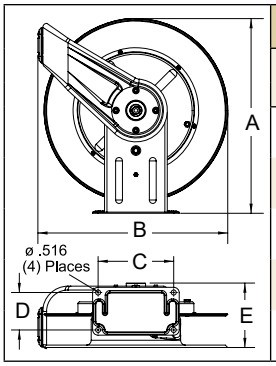

Size Index	1	
	in	mm
A	20 1/4	514
B	19 3/4	502
C	7 7/8	200
D	3 7/8	98
E	7 3/4	197

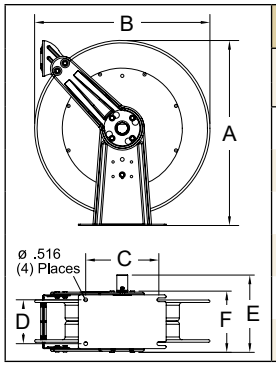

Size Index	2	
	in	mm
A	25 3/8	645
B	24	610
C	10	254
D	6	152
E	12 7/8	327
F	8 1/8	206

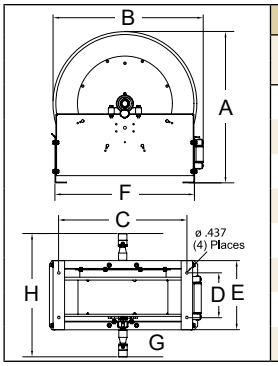

Size Index	3	
	in	mm
A	26 3/8	670
B	26 1/4	667
C	22 1/4	556
D	7 3/4	195
E	12	305
F	24 1/8	613
G	4 3/4	121
H	21 1/2	546

Model with Hose	Shipping Weight lbs	kg	Hose I.D. in	mm	Hose O.D. in	mm	Hose Length ft	m	Pressure psi	bar	NPT(M) Hose Outlet in	NPT(F) Reel Inlet in	Model without hose & bumper	Shipping Weight lbs	kg	Pressure psi	bar	Size Index #
Medium Pressure Hydraulic Hose Reels Maximum temperature 210 °F (99 °C)																		
TH5425 OMP	34	15	1/4	6	.530	13	25	8	2000	138	1/4	1/4	**TH5400 OMP**	24	11	3000	207	pg. 9
TH7445 OMP	60	27	1/4	6	.530	13	45	14	2000	138	1/4	1/4	**TH7400 OMP**	44	20	3000	207	1
THA7630 OMP	53	24	3/8	10	.660	17	30	9	2000	138	3/8	3/8	**THA7600 OMP**	44	20	3000	207	1
TH86050 OMP	99	45	3/8	10	.710	18	50	15	2000	138	3/8	3/8	**TH86000 OMP**	88	40	3000	207	2
THA7825 OMP	57	26	1/2	13	.850	22	25	8	2000	138	3/4 JIC(F)	1/2	**THA7800 OMP**	50	23	3000	207	1
TH88050 OMP	104	47	1/2	13	.850	22	50	15	2000	138	1/2	1/2	**TH88000 OMP**	88	40	3000	207	2
TH9265 OMPBW	155	70	1/2	13	.910	24	65	20	2000	138	1/2	1/2	**TH9200 OMPBW**	120	54	3000	207	3

Reference page 4 for guide arm positions.

Models listed with an icon can ship same day upon request when the order is received by 1:00 PM Eastern Time for quantities of 10 or fewer.

Indiana Warehouse
California Warehouse
Indiana & California Warehouses
Canadian Warehouse

Interactive Reel Catalog
Visit **www.reelcraft.com/catalog** for complete product specifications, available parts and accessories.

Prop 65: ⚠ **WARNING:** Cancer and Reproductive Harm www.P65Warnings.ca.gov.



FD83075 OLP

Spring Retractable Fuel Reels

F7000 - 3/4" I.D. / **FF9000** - 1¼", 1½" I.D.
FE9000, FD9000 - 3/4", 1" I.D.
F80000, FD80000 - 3/4", 1" I.D.
FSD10000 - 3/4", 1" I.D.

Reelcraft's spring retractable fuel delivery reels, equipped with fuel compatible seals, incorporate metal forms to insure the greatest possible strength and are ideal for mobile and permanent-mount applications. These rugged, corrosion-resistant reels are suitable for a wide variety of fuel applications including E85. Series F/FD/FE/FSD reels are all supplied with our ball-bearing style swivel.

Model with Hose	Shipping Weight		Hose I.D.		Hose O.D.		Hose Length		Pressure		NPT(M) Hose Outlet	NPT(F) Reel Inlet	Model without hose & bumper	Shipping Weight		Pressure		Size Index Page	Size Index #
	lbs	kg	in	mm	in	mm	ft	m	psi	bar	in	in		lbs	kg	psi	bar		
Low Pressure Fuel Reels Maximum temperature 150 °F (65 °C) w/hose / 210 °F (99 °C) w/o hose																			
F7925 OLP	47	21	3/4	19	1.188	30	25	8	*50	3	3/4	3/4	**F7900 OLP**	45	20	500	35	10	----
F83050 OLP	89	40	3/4	19	1.188	30	50	15	*50	3	3/4	3/4	**F83000 OLP**	74	34	500	35	13	1
FD83075 OLP	115	52	3/4	19	1.188	30	75	23	*50	3	3/4	3/4	**FD83000 OLP**	82	37	500	35	13	2
FD84035 OLP	94	43	1	25	1.500	38	35	11	*50	3	1	1	**FD84000 OLP**	84	38	500	35	13	3
FD84050 OLP	115	52	1	25	1.500	38	50	15	*50	3	1	1	**FD84000 OLP**	84	38	500	35	13	3
FE9350 OLP	140	64	3/4	19	1.188	30	50	15	*50	3	3/4	3/4	**FE9300 OLP**	115	52	500	35	15	1
FE9450 OLP	157	71	1	25	1.500	38	50	15	*50	3	1	1	**FE9400 OLP**	115	52	500	35	15	1
FD9350 OLP	140	64	3/4	19	1.188	30	50	15	*50	3	3/4	3/4	**FD9300 OLP**	114	52	500	35	15	1
FD9450 OLP	157	71	1	25	1.500	38	50	15	*50	3	1	1	**FD9400 OLP**	113	51	500	35	15	1
Not available with hose			1 1/4	32	1.750	44	50	15	--	--	1 1/4	1 1/2	**FF9500 OLPBW**	125	57	600	41	15	2
Not available with hose			1 1/2	38	2.000	51	50	15	--	--	1 1/2	1 1/2	**FF9600 OLPBW**	135	61	600	41	15	2
FSD13035 OLP	102	46	3/4	19	1.188	30	35	11	*50	3	3/4	1	**FSD13000 OLP**	85	39	500	35	14	1
FSD13050 OLP	110	50	3/4	19	1.188	30	50	15	*50	3	3/4	1	**FSD13000 OLP**	85	39	500	35	14	1
FSD14035 OLP	105	48	1	25	1.500	38	35	11	*50	3	1	1	**FSD14000 OLP**	85	39	500	35	14	1
FSD14050 OLP	127	58	1	25	1.500	38	50	15	*50	3	1	1	**FSD14005 OLP**	92	42	500	35	14	2

*Models equipped with UL330 and ULC approved fuel grade hose. 250 psi minimum burst (17 Bar). Flow rates of fuel hose are reduced by 30% with addition of internal spring type bend restrictors. For example, flow rate of F7925 OLP with internal bend restrictors is 9.0 GPM at 40 psi; flow without internal bend restrictors is 13.0 GPM at 40 psi. See page 4 for guide arm positions.

Prop 65: ⚠ WARNING:
Cancer and Reproductive Harm
www.P65Warnings.ca.gov.



GHC3100 N



NEW!
GS3050

Static Discharge / Grounding Reels

Series G 3000

Static discharge reels are used to ground equipment operating in hazardous atmospheres. When properly clamped to ground, the static discharge reel dissipates static electrical buildup, reducing the chances of sparking and the potential for explosion.

Model	Cable Extended		Clamp Rating	Max Temp		Cable Notes	Shipping Weight	
	ft	m		°F	°C		lbs	kg
G 3050	50	15	100 AMP	150	66	Single 7 x 7 stranded steel*	12	5
GS3050**	50	15	100 AMP	150	66	Single 7 x 7 stranded stainless steel*	12	5
G 3050 Y	50	15	100 AMP	150	66	35' (9.2m) plus dual 15' (4.6m) for Y* Total extension 50' (15m)	12	5
G 3050 N	50	15	100 AMP	150	66	Hi-vis orange nylon covered cable^	12	5
GA3100 N	100	30	100 AMP	125	52	Hi-vis orange nylon covered cable^	16	7
GHC3100 N	100	30	100 AMP	125	52	Hi-vis orange nylon covered cable^	12	5

*3/32" OD aircraft cable. DC resistance is approximately one ohm per 50 ft. of cable. **304 stainless steel model.
^Nylon covered cable (⅛" O.D.). Refer to reelcraft.com for dimensions.

Models listed with an icon can ship same day upon request when the order is received by 1:00 PM Eastern Time for quantities of 10 or fewer.

IN Indiana Warehouse | IN CA Indiana & California Warehouses | CA California Warehouse | Canadian Warehouse

Customer Service: 1.855.634.9109
All Other Calls: 1.800.444.3134

Stainless Steel Spring Retractable Reels

Air/Water/Oil - 3/8", 1/2", 3/4", 1" I.D.

Made in USA

Reelcraft's stainless steel hose reels are ideal for food processing, pre-rinse, wash down, chemical transfer and industrial-solvent handling. Also suitable for coastal, off-shore and on-board ship in marine applications where the harsh environment of salt water spray requires the use of stainless steel hose reels. Swivels include Viton® O-rings. Buna seals are available for water applications by adding a -B at the end of the model number.

Note: Standard latch parts are made from aluminium. Series 80000 and D80000 stainless reels have an aluminum fluid path. Stainless latch parts and fluid path are available as a standard option by placing a -S at the end (example: OLS-S). Carbon steel reels with stainless steel fluid path are available as standard.



LC607 OLS



D9300 OLSBW

Features

- ✓ Full-flow stainless steel shaft and swivel assures maximum product delivery. **Exception:** Series 80000 only on OLS-S models.
- ✓ Heavy duty brackets eliminate bending due to angular hose pull.
- ✓ Nylon guide rollers reduce hose drag and abrasion.
- ✓ Vibration-proof self-locking fasteners assures assembly integrity.
- ✓ 304L stainless steel

Model without hose & bumper	Model without hose & bumper SS Latch Parts	Shipping Weight lbs	Shipping Weight kg	Hose I.D. in	Hose I.D. mm	Hose O.D. in	Hose O.D. mm	Hose Length ft	Hose Length m	Pressure psi	Pressure bar	NPT(F) Outlet in	NPT(F) Inlet in	Size Index Page	Size Index #
Low and Medium Pressure Reels Maximum temperature 210 °F (99 °C)															
5600 OLS CA	**5600 OLS-S**	22	10	3/8	10	.600	15	35	11	500	35	3/8	3/8	9	2
5600 OMS	**5600 OMS-S**	24	11	3/8	10	.710	18	30	9	3000	207	3/8	3/8	9	2
LC607 OLS* IN	----------	35	16	3/8	10	.600	15	70	21	300	21	1/4	1/4	refer to reelcraft.com	
LC800 OLS* IN	----------	33	15	1/2	13	.750	19	50	15	300	21	1/2	1/2		
7800 OLS IN CA	**7800 OLS-S**	41	19	1/2	13	.750	19	50	15	500	35	1/2	1/2	10	----
7600 OMS55	**7600 OMS-S55**	42	19	3/8	10	.710	18	66	20	3000	207	3/8	3/8	10	----
7800 OMS CA	**7800 OMS-S**	43	20	1/2	13	.850	22	50	15	3000	207	1/2	1/2	10	----
82000 OLS	**82000 OLS-S**	81	37	1/2	13	.750	19	100	30	500	35	1/2	1/2	13	1
82000 OMS	**82000 OMS-S**	83	38	1/2	13	.850	22	75	23	1500	103	1/2	1/2	13	1
83000 OLS	**83000 OLS-S**	81	37	3/4	19	1.188	30	50	15	500	35	3/4	3/4	13	1
83000 OMS	**83000 OMS-S**	83	38	3/4	19	1.188	30	50	15	1250	86	3/4	3/4	13	1
D83000 OLS	**D83000 OLS-S**	84	38	3/4	19	1.188	30	75	23	500	35	3/4	3/4	13	2
D84000 OLS	**D84000 OLS-S**	92	42	1	25	1.375	35	50	15	500	35	1	1	13	3
D9200 OLSBW	**D9200 OLSBW-S**	115	52	1/2	13	.750	19	75	23	500	35	1/2	1/2	15	1
D9300 OLSBW	**D9300 OLSBW-S**	116	53	3/4	19	1.188	30	75	23	500	35	3/4	3/4	15	1
D9400 OLSBW	**D9400 OLSBW-S**	117	53	1	25	1.375	35	50	15	500	35	1	1	15	1
D9200 OMSBW	**D9200 OMSBW-S**	118	54	1/2	13	.850	22	75	23	3000	207	1/2	1/2	15	1
D9300 OMSBW	**D9300 OMSBW-S**	118	54	3/4	19	1.188	30	50	15	3000	207	3/4	3/4	15	1

For all metric thread connections over 1/2" add the suffix number 70 to indicate BSPT threads - example D83000 OLS70. Reference page 4 for guide arm positions. *Maximum temperature 150 °F (65 °C); includes Buna seals.

Model without Hose	Shipping Weight lbs	Shipping Weight kg	Pressure psi	Pressure bar	NPT(F) Outlet in	NPT(F) Inlet in	I.D.	1/4	6	3/8	10	1/2	13	3/4	19	1	25	Size Index # (see pg. 24)
							O.D.	.530	13	.710	18	.850	22	1.188	30	1.375	35	
Manual Crank Medium Pressure Reels Maximum temperature 210 °F (99 °C)																		
HS18000 M CA	36	16	3000	207	1/2	1/2	Hose Length	425	130	300	91	200	61	---	---	---	---	1
HS28000 M	35	16	3000	207	1/2	1/2		625	191	450	137	300	91	---	---	---	---	2
HS19000 M	38	17	3000	207	3/4	3/4		425	130	300	91	200	61	75	23	---	---	1
HS29000 M	36	16	3000	207	3/4	3/4		625	191	450	137	300	91	125	38	---	---	2
HS37000 L	47	21	500	35	1 (M)	1		---	---	---	---	---	---	---	---	100	30	refer to reelcraft.com

Models listed with an icon can ship same day upon request when the order is received by 1:00 PM Eastern Time for quantities of 10 or fewer.

IN Indiana Warehouse
CA California Warehouse
IN CA Indiana & California Warehouses
Canadian Warehouse

Interactive Reel Catalog
Visit **www.reelcraft.com/catalog** for complete product specifications, available parts and accessories.

Prop 65: ⚠ WARNING:
Cancer and Reproductive Harm
www.P65Warnings.ca.gov.



4625 OLPSW5

Optional 360° Swivel S600248

Spray Valve S600080

Spring Retractable Pre-Rinse Reels - 3/8" I.D.

Engineered for use in highly corrosive environments such as restaurants, institutions, and home and garden applications. Reelcraft's pre-rinse reels include a standard lever-operated spray valve. Available in stainless or powder-coat finish. Rated for hot water up to 180 °F (82 °C).

Hot water washdown and food prep

Commercial use, restaurants, schools, home/garden and more



A5835 OLBSW23

Made in USA

Spring Retractable Potable (Drinking) Water Reel - 1/2" I.D.

Designed for potable water systems, the A5835 OLBSW23 is suitable for use as a drinking water system component though does not include the NSF/ANSI 61 Certification. Fluid path is stainless steel and CPVC material.

Drinking Water

Boats, RVs, buses and much more

Pre-Rinse Reel Features

- ✓ Lever-operated spray valve is included
- ✓ Optional 360° rotating swivel (600248) offers 20° of angular motion
- ✓ Push-Lok, field replaceable, hose-end fittings
- ✓ Reels can be mounted on the wall, ceiling, or under a counter, making water conveniently available
- ✓ Latching mechanism holds hose at desired length

Potable Water Reel Features

- ✓ Stainless steel, full flow shaft and PVC swivel
- ✓ Convenient fast hook-up and disconnect
- ✓ Drain and standard female garden hose outlet fitting are standard
- ✓ Maximum operating temperature 73 °F (23 °C)

Model with Hose	Shipping Weight		Hose I.D.		Hose O.D.		Hose Length		Pressure		NPT(F) Reel Inlet	Size Index #
	lbs	kg	in	mm	in	mm	ft	m	psi	bar	in	
Pre-Rinse Hose Reels Maximum temperature 180 °F (82 °C)												
4625 OLPSW5	22	10	3/8	10	.640	16	25	8	125	9	3/8	1
5635 OLPSW5	27	12	3/8	10	.640	16	35	11	125	9	3/8	2
5635 ELPSW5	37	17	3/8	10	.640	16	35	11	125	9	3/8	3
Pre-Rinse Stainless Steel Hose Reels Maximum temperature 180 °F (82 °C)												
5635 OLSSW5	28	13	3/8	10	.640	16	35	11	125	9	3/8	2
5635 ELSSW5	38	17	3/8	10	.640	16	35	11	125	9	3/8	3
Potable (Drinking) Water Hose Reels Garden hose fitting 3/4" N/H threads (F)												
A5835 OLBSW23*	28	13	1/2	13	.781	20	35	11	150	10	1/2 male	2

Pressure rating for reel without spray valve is 250 psi (17 bar). *Maximum operating temperature is 73 °F (23 °C).
Reference page 4 for guide arm positions.

Dimensions - Size Index

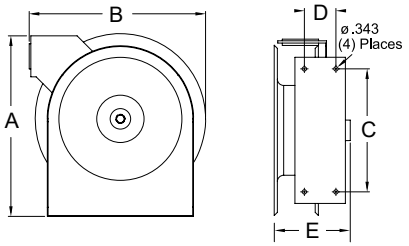

	1		2		3	
	in	mm	in	mm	in	mm
A	12 7/8	327	14 3/8	365	15	381
B	12 5/8	321	14 1/4	362	16 1/4	413
C	8	203	9 3/4	248	9 3/4	248
D	2 1/2	64	2 1/2	64	2 1/2	64
E	5 5/8	143	6 1/8	156	7	178

Prop 65: ⚠ **WARNING:** Cancer and Reproductive Harm www.P65Warnings.ca.gov.

Interactive Reel Catalog
Visit **www.reelcraft.com/catalog** for complete product specifications, available parts and accessories.

Models listed with an icon can ship same day upon request when the order is received by 1:00 PM Eastern Time for quantities of 10 or fewer.

Indiana Warehouse
California Warehouse
Indiana & California Warehouses
Canadian Warehouse

Customer Service: 1.855.634.9109
All Other Calls: 1.800.444.3134

Spring Retractable Composite Reels

Air/Water/Chemical Delivery/Welding

1/4", 3/8", 1/2", 5/8" I.D.

Series S reels are economical, lighter weight, easy to handle and meet the demands of a medium-duty industrial grade reel for continuous operation. Made of corrosion-proof, tough polypropylene, extensive tests have shown it to be highly resistant to the vast majority of acids, alkalis and UV rays. The design protects the hose and allows easy cleaning of both hose and reel. Wall, ceiling or floor mount.



Suitable for all position mounting.

SGA3650 OLP

Series S reels are made in Australia.

A unique combination of composites and metals

The tough composite polypropylene outer case houses solid brass swivel and fluid path, a steel main shaft and high quality spring steel motor.

Corrosion-resistant, durable

The tough composite polypropylene outer case is UV stabilized and resistant to most acids and alkalis with excellent impact resistance.

Positive latching system

The design of the latching system ensures positive latching in any mounting position.

Unique mounting

The bracket supplied with the reel allows mounting in any position.

Lighter weight

The Series S offers distinct weight advantages due to the composite case construction.



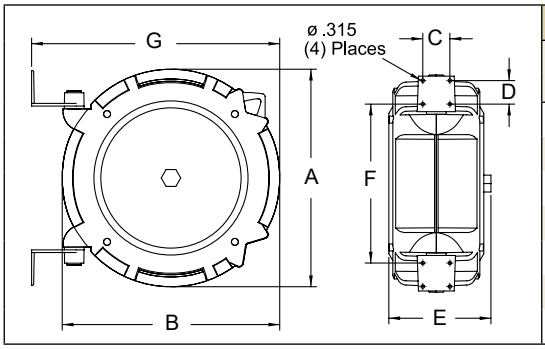

Dimensions	S Series	
	in	mm
A	19 3/8	492
B	19 1/4	489
C	2 1/2	64
D	2 1/8	54
E	9 1/8	232
F	14 1/8	359
G	22	559

Applications

- Combination air/water
- Water service
- Hot water wash
- Chemical delivery
- Oxygen acetylene

Model with Hose	Shipping Weight		Hose I.D.		Hose O.D.		Hose Length		**Max Pressure		NPT(M) Hose Outlet	NPT(F) Reel Inlet
	lbs	kg	in	mm	in	mm	ft	m	psi	bar	in	in
Air* & Water* Hose Reels Working temperature 150 °F (65 °C)												
SGA3650 OLP	21	10	3/8	10	.621	16	50	15	240	17	3/8	3/8
SGA3665 OLP	25	11	3/8	10	.621	16	65	20	240	17	3/8	3/8
SGA3850 OLP	23	10	1/2	13	.781	20	50	15	240	17	1/2	1/2
Water Hose Reel Garden-style hose end. Working temperature 150 °F (65 °C)												
SWA3850 OLP	23	10	5/8	16	.750	19	50	15	100	7	3/4 NH	1/2
Hot Water Wash Reel Working temperature 185 °F (85 °C). **Maximum working pressure at 86 °F (30 °C)												
SHA3850 OLP	22	10	1/2	13	.781	20	50	15	240	17	1/2	1/2
Chemical Delivery Hose Reel Working temperature 140 °F (60 °C)												
SCA3650 OLP	19	9	3/8	10	.621	16	50	15	240	17	3/8	3/8
SCA3850 OLP	22	10	1/2	13	.781	20	50	15	240	17	1/2	1/2
Oxygen/Acetylene Hose Reel Working temperature 150 °F (65 °C)												
STW3450 OLP	27	12	1/4	6	.530	13	50	15	300	21	9/16" 18(F) LH-RH	9/16" 18(F) LH-RH

STW3450 OLP E dimension = 11.25" / 286 mm. *Air hose can be used for water on these models.

Models listed with an icon can ship same day upon request when the order is received by 1:00 PM Eastern Time for quantities of 10 or fewer.

Indiana Warehouse | Indiana & California Warehouses | California Warehouse | Canadian Warehouse

Interactive Reel Catalog

Visit us at **www.reelcraft.com/catalog** for complete product specifications, available parts and accessories.

Prop 65: ⚠ WARNING: Cancer and Reproductive Harm www.P65Warnings.ca.gov.



PWD76075 OHP



CA38106 M

Made in USA

Spring Retractable, Hand Crank, Motor Driven

Air/Water - 1/4", 3/8", 1/2" I.D.

Compact design and quality steel construction are incorporated into Reelcraft's full line of pressure wash reels, rated up to 5000 psi. Series PW, H18006 and 30000 reels are able to carry 50 to 425 feet of tangle-free hose and are complete with a high pressure water swivel for maximum product delivery. The high pressure water swivel is designed to handle a broad range of pressures, temperatures and chemicals; perfect for agricultural/marine, equipment cleaning and pressure washing applications.

Applications

- Agriculture
- Marine
- Equipment cleaning
- Pressure washing

	in	mm	in	mm	in	mm	Shipping Weight		Size Index #
Hose I.D.	1/4	6	3/8	10	1/2	13			
Hose O.D.	.530	13	.730	19	.850	22			
Model without hose & bumper	Hose Length								
	ft	m	ft	m	ft	m	lbs	kg	
Hand Crank Pressure 5000 psi / 345 bar									
H18006 M	150	46	100	30	---	---	31	14	1
CA38106 M	200	61	140	43	100	30	41	19	2
CA38112 M	425	130	300	91	200	61	46	21	3
Electric Motor Driven Pressure 5000 psi / 345 bar									
EA38106 M12D	200	61	140	43	100	30	63	29	4
EA38112 M12D	425	130	300	91	200	61	71	32	5

Max temperature 212 °F (100 °C). PSI rating based upon 2.4 to 1 safety factor.

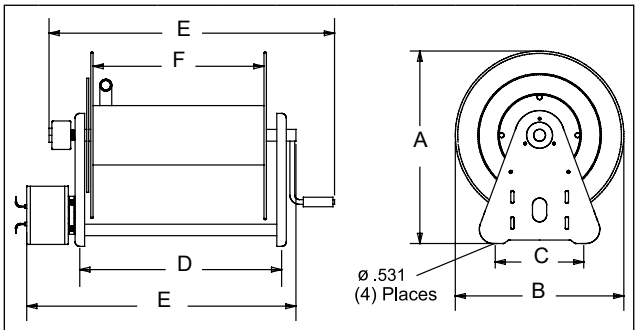

Dimensions - Series H & 30000

	1		2		3		4		5	
	in	mm	in	mm	in	mm	in	mm	in	mm
A	20 1/8	413	20 1/4	514	20 1/4	514	20 1/4	514	20 1/4	514
B	17 3/4	425	17 3/4	425	17 3/4	425	17 3/4	425	17 3/4	425
C	10	254	9	229	9	229	9	229	9	229
D	6 3/8	162	9 3/4	248	15 3/4	400	9 3/4	248	15 3/4	400
E	13 3/4	349	19 3/4	502	25 3/4	654	17 7/8	454	23 7/8	606
F	5	127	6	152	12	305	6	152	12	305

"B" is overall length.

Model with Hose	Shipping Weight		Hose I.D.		Hose O.D.		Hose Length		Pressure		NPT(M) Hose Outlet	NPT(F) Reel Inlet	Model without hose & bumper	Shipping Weight		Pressure		Size Index Page	Size Index #
	lbs	kg	in	mm	in	mm	ft	m	psi	bar	in	in		lbs	kg	psi	bar		
Spring Driven Reels Maximum temperature 210 °F (99 °C)																			
PW7650 OHP	60	27	3/8	10	.730	19	50	15	4800	331	1/4	1/2	**PW7600 OHP**	43	20	5000	345	10	---
PWD76075 OHP	90	41	3/8	10	.730	19	75	23	4800	331	1/4	1/2	**PWD76005 OHP**	60	27	5000	345	12	2
PW81100 OHP	119	54	3/8	10	.730	19	100	30	4800	331	3/8	1/2	**PW81000 OHP**	86	39	5000	345	13	1

PSI rating based upon 2.4 to 1 safety factor. Reference page 4 for guide arm positions.

Prop 65: ⚠ **WARNING:** Cancer and Reproductive Harm www.P65Warnings.ca.gov.

Interactive Reel Catalog
Visit **www.reelcraft.com/catalog** for complete product specifications, available parts and accessories.

Models listed with an icon can ship same day upon request when the order is received by 1:00 PM Eastern Time for quantities of 10 or fewer.

- Indiana Warehouse
- California Warehouse
- Indiana & California Warehouses
- Canadian Warehouse

Customer Service: 1.855.634.9109
All Other Calls: 1.800.444.3134

Light Industrial Hand Crank Hose Reels

Reelcraft's Series C hose reels are designed for lighter-duty applications that require longer lengths of hose. The Series C incorporates a balanced brass swivel, brass inlet, lighter weight components and forward-thinking design. Reels in this family benefit from a tough, corrosion-resistant powder coat paint. All reels feature a drag break to prevent de-spooling when reel is not in use.



CU6050LN

CT6100HN

Series CU Air/Water - 3/8", 1/2" I.D.

Series CU features our most rigid base design in this series and supports the reel on either side.

Series CT Air/Water/Pressure Wash - 3/8", 1/2" I.D.

The Series CT frame features a tubular design. The inlet is fed through the center of the tube frame, protecting the inlet hose and creating a cleaner look over all.

Series CM Pressure Wash - 3/8" I.D.

Series CM reels offer the greatest amount of flexibility in this series by featuring a modular mounting platform. Reelcraft can configure custom mounts upon request or the customer may choose to supply their own.



CM6050HN

Dimensions - Series CT

	5		6		7	
	in	mm	in	mm	in	mm
A	15 5/8	397	15 5/8	397	19 7/8	505
B	13 1/4	337	13 1/4	337	16	406
C	3 1/2	89	3 1/2	89	5	127
D	4 1/4	108	4 1/4	108	6	152
E	15 1/2	394	19 1/2	495	19 7/8	505
F	6	152	6	152	6	152

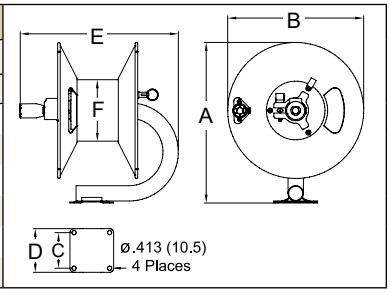

Dimensions - Series CU

	1		2		3		4	
	in	mm	in	mm	in	mm	in	mm
A	11 1/2	292	11 1/2	292	14 3/8	365	14 3/8	365
B	10 1/2	267	10 1/2	267	13 1/4	337	13 1/4	337
C	2	51	2	51	2 3/8	60	2 3/8	60
D	6 5/8	168	11 1/8	283	6 1/4	159	10 1/4	260
E	16 3/4	425	21 1/8	537	16 3/4	425	20 7/8	530
F	4	102	4	102	6	152	6	152
G	9 3/8	238	13 7/8	352	9 1/4	235	13 1/4	337
H	3 3/8	86	3 3/8	86	4	102	4	102

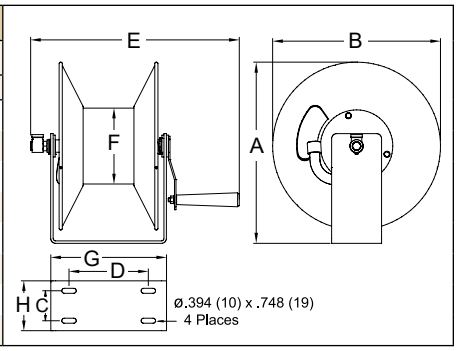

Model w/o hose	Shipping Weight		Hose I.D.		Hose O.D.		Hose Length		Pressure		NPT(F) Reel Outlet	NPT(F) Reel Inlet	Size Index #
	lbs	kg	in	mm	in	mm	ft	m	psi	bar	in	in	
Low Pressure Air/Water Reels Maximum temperature 150 °F (65 °C)													
CU6050LN	12	5	3/8	10	.600	15	50	15	300	21	3/8	3/8	1
CU6100LN	16	7	3/8	10	.600	15	100	30	300	21	3/8	3/8	2
CU8050LN	13	6	1/2	13	.750	19	50	15	300	21	1/2	1/2	3
CU8100LN	20	9	1/2	13	.750	19	100	30	300	21	1/2	1/2	4
CT6050LN	13	6	3/8	10	.600	15	50	15	300	21	1/2	1/2	5
CT6100LN	17	7.5	3/8	10	.600	15	100	30	300	21	1/2	1/2	6
CT8050LN	13	6	1/2	13	.750	19	50	15	300	21	1/2	1/2	5
CT8100LN	17	7.5	1/2	13	.750	19	100	30	300	21	1/2	1/2	6
High Pressure Wash Reels Maximum temperature 210 °F (99 °C)													
CT6050HN	13	6	3/8	10	.730	19	50	15	5000	345	3/8	1/2	5
CT6100HN	17	7.5	3/8	10	.730	19	100	30	5000	345	3/8	1/2	6
CTJ6200HN	28	13	3/8	10	.730	19	200	61	5000	345	3/8	1/2	7
CM6050HN	14	6.5	3/8	10	.730	19	50	15	5000	345	3/8	1/2 (M)	8
CM6100HN	18	8	3/8	10	.730	19	100	30	5000	345	3/8	1/2 (M)	9

Reels are supplied without hose; assemblies will be quoted upon request.

Dimensions - Series CM

	8		9	
	in	mm	in	mm
B	14 3/8	365	18 3/8	467
C	2 1/2	64	2 1/2	64
D	3 1/2	89	3 1/2	89
E	16 3/8	416	20 1/2	521

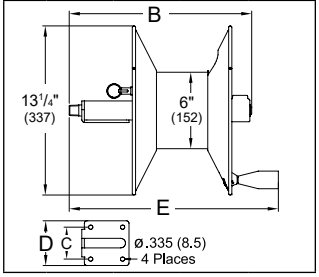

Prop 65: ⚠ **WARNING:**
Cancer and Reproductive Harm
www.P65Warnings.ca.gov.

Models listed with an icon can ship same day upon request when the order is received by 1:00 PM Eastern Time for quantities of 10 or fewer.

Indiana Warehouse | Indiana & California Warehouses | California Warehouse | Canadian Warehouse

Medium Duty Hand Crank Reels

Series H - Air/Water/Oil/Grease - 3/8", 1/2", 3/4" I.D.

Made in USA

Series H is an economical reel designed for medium duty applications requiring long lengths of hose. It is equally suited for plant or field use such as turf care, pest control, steam cleaning and more. Shipped completely assembled, ready to install.



Medium duty H16000

Model without hose	Shipping Weight lbs	kg	Hose I.D. in	mm	Hose O.D. in	mm	Hose Length ft	m	Pressure psi	bar	NPT(F) Reel Outlet in	NPT(F) Reel Inlet in	Size Index #
Low Pressure Air/Water Hose Reels Max temperature 150 °F (65 °C)													
H16000 IN	32	15	3/8	10	.600	15	300	91	500	35	1/4	3/8	1
H26000	34	15	3/8	10	.600	15	450	137	500	35	1/4	3/8	2
H18005	33	15	1/2	13	.750	19	175	53	1000	69	1/2	1/2	5
H18000 CA	34	15	1/2	13	.750	19	200	61	1000	69	1/2	1/2	1
H28005	34	15	1/2	13	.750	19	300	91	1000	69	1/2	1/2	4
H28000	37	17	1/2	13	.750	19	300	91	1000	69	1/2	1/2	2
H19000 IN	33	15	3/4	19	1.075	27	105	32	1000	69	3/4	3/4	1
H29005	36	16	3/4	19	1.075	27	100	30	1000	69	3/4	3/4	3
H29000	41	19	3/4	19	1.075	27	150	46	1000	69	3/4	3/4	2
Medium Pressure Oil Hose Reels Max temperature 210 °F (99 °C)													
H16000 M	32	15	3/8	10	.710	18	300	91	3000	207	3/8	1/2	1
H18000 M CA	34	15	1/2	13	.850	22	200	61	3000	207	1/2	1/2	1
H19000 M	38	17	3/4	19	1.188	30	80	24	3000	207	3/4	3/4	1
H29000 M	35	16	3/4	19	1.188	30	150	46	3000	207	3/4	3/4	2
High Pressure Grease Hose Reels Max temperature 210 °F (99 °C)													
H16000 H	35	16	3/8	10	.730	19	250	76	5000	345	3/8	3/8	1

Hose assemblies can be quoted upon request. **CAUTION:** To prevent drum damage fully extend and pressurize hose and rewind on the reel. Stainless models available, see page 19.

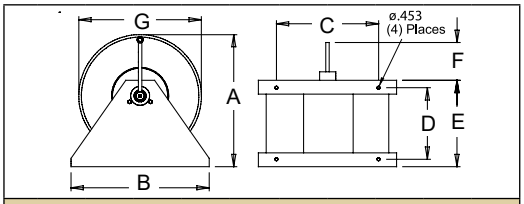

Dimensions - Size Index

	1 in	1 mm	2 in	2 mm	3 in	3 mm	4 in	4 mm	5 in	5 mm
A	19	483	19	483	18 7/8	479	20 1/8	512	20 1/8	512
B	20	508	20	508	14	356	14	356	14	356
C	15	381	15	381	10	254	10	254	10	254
D	10	254	16	407	16	407	16	407	10	254
E	12 1/2	318	18 1/2	470	18 1/2	470	18 1/2	470	12 1/2	318
F	5 3/4	146	5 3/4	146	5 3/4	146	5 3/4	146	5 3/4	146
G	17 3/4	451	17 3/4	451	15 3/16	386	17 3/4	451	17 3/4	451

Drum diameter 8".

Made in USA

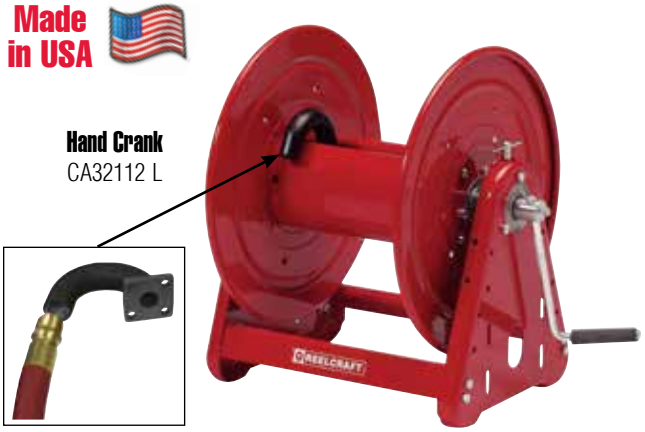

Heavy Duty Hand Crank and Motor Driven Reels

Series 30000 - Air/Water/Oil - 1/4",1/2", 3/4", 1" I.D.

Reelcraft's Series 30000 reels are designed for rugged, heavy duty applications requiring long lengths of hose and large storage capacity. All-bolted unitized construction with no welds to fatigue, full flow swivel and heavy gauge steel frame, spool and drum ensure longest service life. Series 30000's vibration-proof, self-locking fasteners are ideal for industrial or field use such as turf care or pest control.

- ✓ Adjustable spool rotation drag that eliminates hose backlash
- ✓ Nickel-plated swivel with four O-ring options: AFLAS (standard), Buna, Viton® or -EPR* seals *Standard swivel
- ✓ Motor mounting at either end of reel
- ✓ Optional lock pin to prevent spool rotation when the reel is not in use, S600874

Hose Installation: The Series 30000 gooseneck is easily removed from the reel for hose attachment. Simply remove the four fasteners attaching gooseneck to reel, connect hose to the gooseneck and re-connect to the reel. NOTE: Do not discard the O-ring; insure that the O-ring is properly fitted into the grooves when replacing the gooseneck.

Prop 65: ⚠ **WARNING:** Cancer and Reproductive Harm www.P65Warnings.ca.gov.

Interactive Reel Catalog
Visit **www.reelcraft.com/catalog** for complete product specifications, available parts and accessories.

Models listed with an icon can ship same day upon request when the order is received by 1:00 PM Eastern Time for quantities of 10 or fewer.

IN Indiana Warehouse
CA California Warehouse
Indiana & California Warehouses
Canadian Warehouse

Customer Service: 1.855.634.9109
All Other Calls: 1.800.444.3134

Hose I.D.	1/4" (6.4 mm)	3/8" (9.5 mm)	1/2" (12.7 mm)	3/4" (19.1 mm)	1" (25.4 mm)
Hose O.D.	.530" (13 mm)	.710" (18 mm)	.850" (22 mm)	1.188" (30 mm)	1.375" (35.0 mm)
"F" Width	Hose Capacity				
6" (152 mm)	200' (61 m)	140' (43 m)	100' (30 m)	50' (15 m)	N/A
12" (305 mm)	425' (130 m)	300' (91 m)	200' (61 m)	100' (30 m)	50' (15 m)
18" (457 mm)	625' (191 m)	450' (137 m)	325' (99 m)	175' (54 m)	100' (31 m)
22" (559 mm)	780' (238 m)	550' (168 m)	400' (122 m)	225' (69 m)	125' (38 m)
27" (686 mm)	1000' (305 m)	700' (213 m)	500' (152 m)	275' (84 m)	150' (46 m)

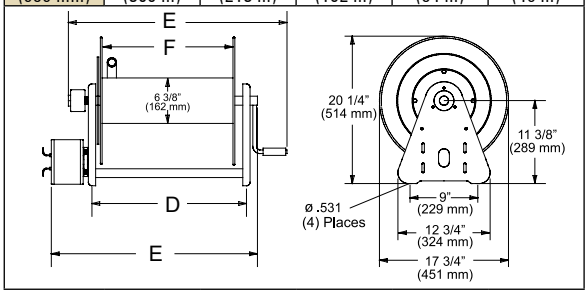

E A 3 2 1 06 L 12D X

Drive Type
A - Air motor
B - Bevel crank
C - Hand crank
E - Electric motor
H - Hydraulic motor

Fluid Path Type
A - Gooseneck
B - No gooseneck (1" only)
H - Heavy duty gooseneck (1" only)

NOTE: This chart is for reference purposes only. Please see selection chart or consult manufacturer for additional models not listed or for any questions about option combinations.

Swivel Size
0 - No swivel
2 - 1/2" (13 mm) I.D.
3 - 3/4" (19 mm) I.D.
4 - 1/2" (13 mm) Dual
5 - 3/4" (19 mm) Dual
6 - 1/4" (6 mm) Dual
7 - 1" (25 mm) I.D.
8 - 1/2" (13 mm) I.D. pressure wash

Width of Spool
See "F" Dimension
06 - 6" (152 mm)
12 - 12" (305 mm)
18 - 18" (457 mm)
22 - 22" (559 mm)
28 - 27" (686 mm)

Pressure
L - 1000 PSI (69 bar)
M - 3000 PSI (207 bar)

Power Source
Blank
12D - 12 V DC
24D - 24 V DC
10A - 115 V AC
4A - 1 ½ HP air motor
6A - 4 HP air motor

Motor Type
Blank
X - Explosion proof electric motor

Model without hose	Shipping Weight lbs	kg	Hose I.D. in	mm	Hose O.D. in	mm	Capacity ft	m	Pressure psi	bar	NPT(F) Reel Outlet in	NPT(F) Reel Inlet in	D in	mm	E in	mm	F in	mm
Hand Crank Hose Reels Maximum temperature 210 °F (99 °C)																		
CA32106 L	40	18	1/2	13	.750	19	100	30	1000	69	1/2	1/2	9 3/4	248	19 3/4	502	6	152
CA32112 L	46	21	1/2	13	.750	19	200	61	1000	69	1/2	1/2	15 3/4	400	25 3/4	654	12	305
CA32118 L	51	23	1/2	13	.750	19	325	99	1000	69	1/2	1/2	21 3/4	552	31 3/4	806	18	457
CA32122 L	65	29	1/2	13	.750	19	400	122	1000	69	1/2	1/2	25 3/4	654	35 3/4	908	22	559
CA32128 L	69	31	1/2	13	.750	19	500	152	1000	69	1/2	1/2	30 3/4	781	40 3/4	1035	27	686
CA32106 M	42	19	1/2	13	.850	22	100	30	3000	207	1/2	1/2	9 3/4	248	19 3/4	502	6	152
CA32112 M	46	21	1/2	13	.850	22	200	61	3000	207	1/2	1/2	15 3/4	400	25 3/4	654	12	305
CA32118 M	52	24	1/2	13	.850	22	325	99	3000	207	1/2	1/2	21 3/4	552	31 3/4	806	18	457
CA33106 L	41	19	3/4	19	1.075	27	50	15	1000	69	3/4	3/4	9 3/4	248	19 3/4	502	6	152
CA33112 L	46	21	3/4	19	1.075	27	100	30	1000	69	3/4	3/4	15 3/4	400	25 3/4	654	12	305
CA33118 L	51	23	3/4	19	1.075	27	175	53	1000	69	3/4	3/4	21 3/4	552	31 3/4	806	18	457
CA33112 M	47	21	3/4	19	1.188	30	100	30	3000	207	3/4	3/4	15 3/4	400	25 3/4	654	12	305
CA33118 M	51	23	3/4	19	1.188	30	175	53	3000	207	3/4	3/4	21 3/4	552	31 3/4	806	18	457
CH37118 L*	64	29	1	25	1.375	35	100	30	1000	69	1	1	21 3/4	552	31 3/4	806	18	457
CH37122 L*	73	33	1	25	1.375	35	125	38	1000	69	1	1	25 3/4	654	35 3/4	908	22	559
CH37128 L*	77	35	1	25	1.375	35	150	46	1000	69	1	1	30 3/4	781	40 3/4	1035	27	686
Bevel Crank Hose Reels Maximum temperature 210 °F (99 °C)																		
BA36112 L	57	26	1/4	6	Twin Welding		250	76	200	14	1/4	1/4	15 3/4	400	25 3/4	654	12	305
BA34112 M	54	24	1/2	13	Twin Hydraulic		100	30	3000	207	1/2	1/2	15 3/4	400	25 3/4	654	12	305
Electric Motor Driven Hose Reels Maximum temperature 210 °F (99 °C)																		
EA32106 L10A	61	28	1/2	13	.750	19	100	30	1000	69	1/2	1/2	9 3/4	248	19 5/8	498	6	152
EA32112 L12D	64	29	1/2	13	.750	19	200	61	1000	69	1/2	1/2	15 3/4	400	23 7/8	606	12	305
EA32118 L12D	68	31	1/2	13	.750	19	325	99	1000	69	1/2	1/2	21 3/4	552	29 5/8	752	18	457
EA33112 L12D	68	31	3/4	19	1.075	27	100	30	1000	69	3/4	3/4	15 3/4	400	23 7/8	606	12	305
EA33118 L12D	68	31	3/4	19	1.075	27	175	53	1000	69	3/4	3/4	21 3/4	552	29 5/8	752	18	457
EA33112 M12D	71	32	3/4	19	1.188	30	100	30	3000	207	3/4	3/4	15 3/4	400	23 7/8	606	12	305
EA33128 M12D	91	41	3/4	19	1.188	30	275	84	3000	207	3/4	3/4	30 3/4	781	38 5/8	981	27	686
EA33112 M24D	71	32	3/4	19	1.188	30	100	30	3000	207	3/4	3/4	15 3/4	400	23 7/8	606	12	305
EH37118 L12D*	82	37	1	25	1.375	35	100	30	300	21	1	1	21 3/4	552	31	787	18	457
Air Motor Driven Hose Reels Filter, regulator, lubricator required. Maximum temperature 210 °F (99 °C)																		
AA32112 L4A	62	28	1/2	13	.750	19	200	61	1000	69	1/2	1/2	15 3/4	400	23 1/4	591	12	305
AA33106 L4A	59	27	3/4	19	1.075	27	50	15	1000	69	3/4	3/4	9 3/4	248	17 1/4	438	6	152
AA33112 L6A	68	31	3/4	19	1.075	27	100	30	1000	69	3/4	3/4	15 3/4	400	23 1/4	591	12	305

Hose assemblies can be quoted upon request. **CAUTION:** To prevent drum damage, fully extend and pressurize hose and rewind on the reel. For metric thread connections over 1/2" add the suffix number 70 to indicate BSPT threads - example CA33112 M70. *All 1" reel models have an 8" (203 mm) diameter drum.

Many more reel models available in addition to chart. Please contact manufacturer for details.

Prop 65: ⚠ **WARNING:** Cancer and Reproductive Harm - www.P65Warnings.ca.gov.

Portable Hose Reel and Cart



Hose Reel and Cart Package
600968

Hose Reel and Cart Packages	
Package	**Items Included**
600965	12" hand crank hose reel (CA32112 L); 12" hand cart with pneumatic tires (600741-1); 10' inlet hose (600962)
600966	12" hand crank hose reel (CA32112 L); 12" hand cart with semi-pneumatic tires (600741-2); 10' inlet hose (600962)
600967	12" hand crank hose reel (CA33112 L); 12" hand cart with pneumatic tires (600741-1); 10' inlet hose (600963)
600968	18" hand crank hose reel (CB37118 L); 18" hand cart with pneumatic tires (600885-1); 10' inlet hose (S600982-10)

Additional Accessories

Made in USA

Battery box (battery not included): S600812
Battery cable connector: 600814
Chain guard: S600518
Hose: 1" ID x 100', 1" NPT x 1" NPSH: S600982-100
Hose: 3/4" ID x 150', 3/4" NPT x 1" NPSH: 601044-150
Inlet hose: 1" ID x 10', 1" NPT x 1" NPSH: S600982-10
Operating switch: S600808

Garden Fitting Conversion Kit
1/2" NPTM x 3/4" NH: 260729
3/4" NPTM x 3/4" NH: 261702



600965

Note: Refer to pages 24 and 25 for Series 30000 hose reel dimensions and specifications.

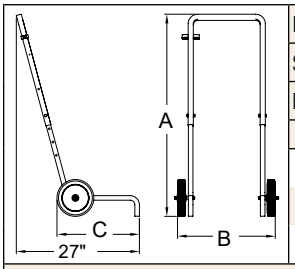

Pneumatic	**600741-1**		**600885-1**	
Semi-Pneumatic	**600741-2**		**600885-2**	
Reel Size	**12"**		**18"**	
	in	mm	in	mm
A	Adjustable*			
B	23 3/4	603	28 3/4	730
C	18 1/4	464	18 1/4	464

*Handle height of cart is adjustable to 35 5/8", 38 5/8", 41 1/2" or 44 1/2". Eight 5/16" (8mm) diameter mounting holes.

Hose Reel and Trailer

Made in USA

Reelcraft's rugged, self-contained hose reel trailer easily attaches to most off-road vehicles or carts and is pre-drilled 12" or 18" for Series 30000 hose reels. Reels hold up to 100' of 1" I.D. water hose.
Makes spot watering easier, quicker and more convenient.
Applications include golf courses, athletic fields, sports turfs, grounds maintenance, parks and rec, agriculture and nurseries.



600910

Hose Reel and Trailer Packages	
Package	**Items Included**
600911	Trailer (600810); Hand rewind hose reel (CB37118 L); 10' lead hose (S600982-10); Roller bracket, top wind (S602133-3)
600910	Trailer (600810); 12 V DC Motor driven hose reel (EB37118 L12D); Switch, complete (S600808); Battery box, battery not included (S600812); Chain guard (S600518); Roller bracket, top wind (S602133-3); Roller bracket, bottom wind (S602132-3); 10' lead hose with 1" I.D. (S600982-10)
600810	Trailer only - does not include hose or reel. Reels designed for trailer include motor driven EB37118 L12D and hand crank CB37118 L. Trailer weight 154 lbs / 70 kg.

Trailer Dimensions

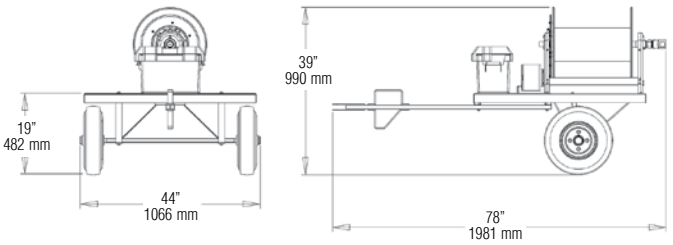

Trailer designed for off-road use only, not for passenger transport. Maximum weight capacity 400 pounds. Maximum speed 15 miles per hour. Trailer, reel and accessories sold separately.



S600812



600814

Additional Series 30000 Accessories

S600812 Battery Box
Battery not included. Supplied with mounting hardware.
Inside dimensions = 9" height x 14" width x 7 1/2" depth

600814 Battery Cable Connector
Battery not included.

See page 50 for switches, motors and chain guards; refer to reelcraft.com for replacement hoses.

Prop 65: ⚠ **WARNING:**
Cancer and Reproductive Harm - www.P65Warnings.ca.gov.

Customer Service: 1.855.634.9109
All Other Calls: 1.800.444.3134

Reelcraft's Reel Configurator

Large Frame Reels

1/2" to 3" I.D.; hose lengths to 610' and more

Reelcraft's new reel configurator quickly and accurately quotes large frame reels. Simply answer a few questions about your reel needs and the configurator can instantly quote your reel. It will also create a 3D model from which a sales drawing and bill of material can be generated that can be sent out for your review. The new configurator allows for shorter lead times for large frame reels and increases the accuracy of the available combinations of reel options.

Improved response time

The configurator has greatly improved our response time to the customer. The traditional 2-3 day quote time has been reduced to only 20 minutes.

More accurate quotes

The configurator's rules based system eliminates incompatibilities and increases the accuracy of the available combinations of reel options. It will also create a 3D model from which a sales drawing and bill of material can be generated that can be sent out for your review.

Reduced product lead time

The improved response time and quote procedure have also decreased the product lead time. The standard 4-6 week product lead time can be reduced to a mere 2-3 weeks with most configured products.

Current capacity

The configurator currently covers 85% of the standard large frame reels sold and manufactured by Reelcraft with hose I.D.'s ranging from 1/2" to 3". More sizes will become available as released.

For an accurate quote, please advise:

1. Product to be handled such as air, oil, water, etc.
2. Maximum operating pressure in PSI.
3. Hose inside diameter (I.D.) and length.
4. Desired drive type such as hand crank, electric motor, air motor, etc.
5. Any special or additional accessories needed.

NOTE: Not all options are available in every combination. All large frame reels are supplied without hose. Reelcraft's configured reels and custom reels are built to order and not returnable.

Custom Capabilities

Don't see what you need? Reelcraft's engineered products group custom builds to your specifications.

- Very few size and weight constraints
- Special finishes / paint options
- Various drive types
- Wide range of pressures
- No minimum quantities



Series 1200 - 1/2", 3/4", 1" I.D.

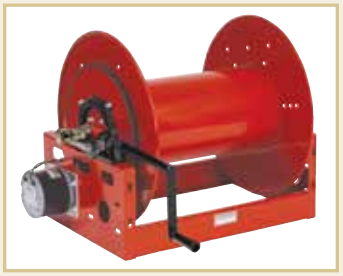

Series 2400 - 1/2", 3/4", 1" I.D.



Series 3900 - 1", 1¼", 1½" I.D.
Series 3700 / 5900 - 2", 3" I.D.

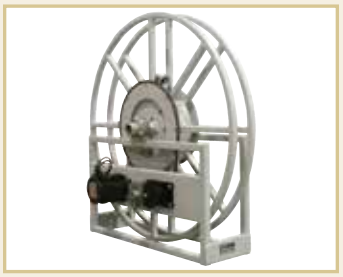

Series 6000 - 1½", 2", 2½", 3" I.D.

Reelcraft's Engineered Product Solutions

Meets or Exceeds Military Vibration for Truck Transport test.
MIL-STD-810F
500,000 mile equivalent

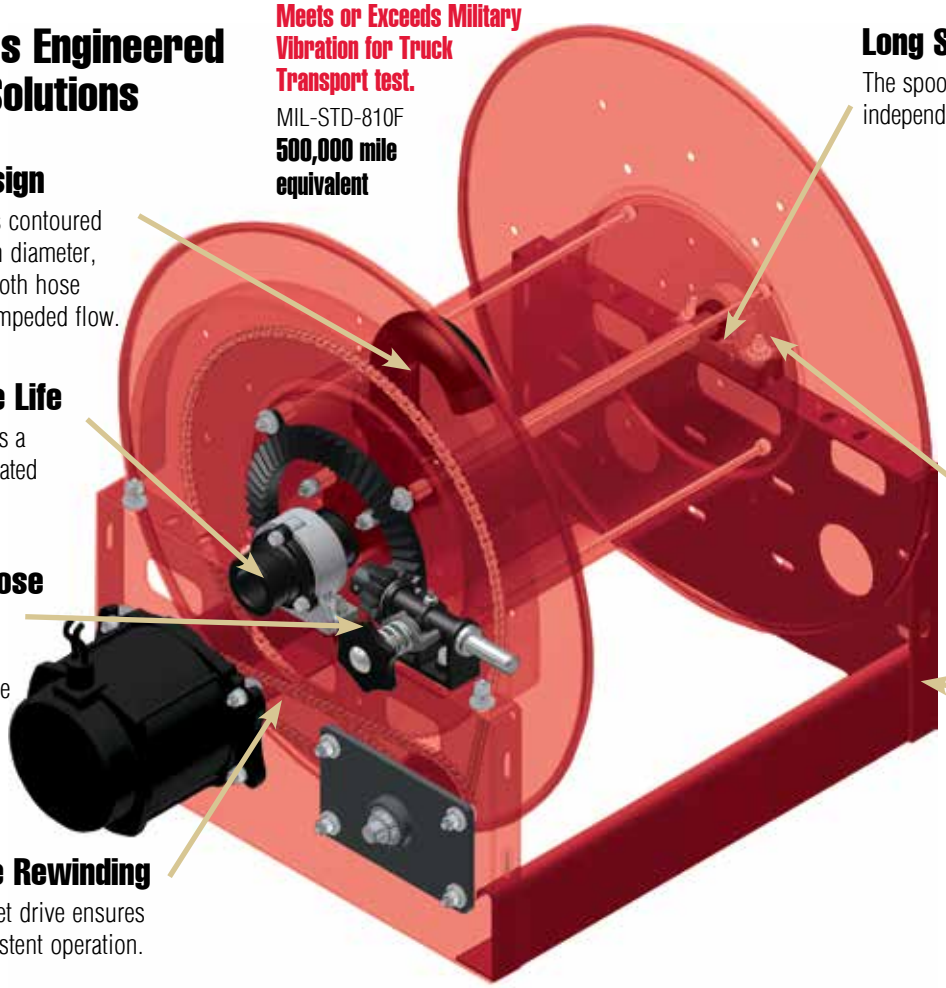

Full Flow Design
The goose neck is contoured to match the drum diameter, which allows smooth hose wrapping and unimpeded flow.

Long Service Life
Swivel incorporates a permanently lubricated ball bearing.

Adjustable Hose Tension
The brake can be adjusted to suit the application requirements.

Trouble-Free Rewinding
Chain and sprocket drive ensures smooth and consistent operation.

Long Service Life
The spool axial is supported by independent self-aligning bearing.

Free Rotation While Pressurized
The swing joint and spindle allows reel to freely rotate while fluid is pressurized.

Precise Rigid Construction
Proprietary unitized tie rods are zinc plated offering greater strength and resistance to vibration and corrosion.

Ultimate Corrosion Resistance
Individually powder coated components insure maximum coverage and resistance to corrosion. Stainless steel fasteners are standard.

Drive Options		Series
E	12 V DC	1200
NJ	24 V DC	2400
EP	*12 V DC Exp	3900
EA	*115 V AC Exp	3700
EX	*230 V AC Exp	5900
EJ	*24 V DC Exp	
HD	Hydraulic	
AF	1½ HP Air	
AR	4 HP Air	
BC	Bevel Crank	
HC	Hand Crank	
S	Storage	
CR	Cable Reel	

*Exp=Explosion proof motor

Material Options/ Drive Size	
½" Pitch Chain	###5
⅝" Pitch Chain	###6
¾" Pitch Chain	###7
Gear Driven	###9
Alum. Frame/Spool	##5#
304 S.S. Frame/Spool	##9#
316 S.S. Frame/Spool	##8#
Sewer Cleaning Reel	##15
Twin Hose	####T

Head Dia.
19
21
23
25
28
31
36
39
46

Drum Length
6"-36" in 2" increments

Thread Size	
50	½"
75	¾"
10	1"
12	1¼"
15	1½"
20	2"
25	2½"
30	3"
40	4"

Inlet/Outlet Thread	
FM	Female In/ Male Out
FF	Female In/Out
MF	Male In/ Female Out
MM	Male In/Out
VM	Grooved fitting In/Male Out
VF	Grooved fitting In/ Female Out

Thread Style	
NP	NPT
BP	BSPP
BT	BSPT

Fluid Path Material	
A	Aluminum
D	Ductile Iron
S	Stainless

Pressure	
LP	0-600
1K	600-1000
3K	1000-3000
5K	3001-5000
6K	5001-6000
10K	10,000
15K	15,000

Inlet Style	
1	Straight
2	90°
5	1" LPG
6	1½" LPG

Fluid Path Location/ Direction	
1	Left Hand Top Wind
2	Left Hand Bottom Wind
3	Right Hand Top Wind
4	Right Hand Bottom Wind

Color Code	
R	Red
B	Black
W	White
G	Grey
S	Silver

Additional Options
Idler
Chain Guard
Roller Bracket (Top)
Roller Bracket (Bottom)
Inboard Motor
Brake
Auxiliary Bevel Crank
Hose Boss (Guide)
Junction Box
Explosion Proof Switch
Solenoid
Circuit Breaker
Control Valve

Part No. Example: EP3900-23-28-15FFNPALP21-R00

EP(12VDC Electric Explosion Proof Motor)
3900(Series 3900 Hose Reel)
-23(23" Head Dia.) -28(28" Drum Length)
-15(1-1/2" Thread Size) FF(Female In/Out Thread Type)
NP(NPT Thread Style) A(Aluminum Fluid Path)
LP(0-600 PSI) 2(90° Inlet)
1(Left Hand Top Wind Fluid Path Location/Direction)
R(Red)

NOTE: Not all options available in every combination. Actual assigned part numbers will vary. Please contact manufacturer for price and availability.

Customer Service: 1.855.634.9109
All Other Calls: 1.800.444.3134

Heavy Duty Large Frame Reels

Nordic Series 1200

1" fluid path for 1/2" through 1" I.D. hose

Rewind: Direct crank rewind or chain and sprocket drive powered by A.C. or D.C. electric motor, compressed air motor or hydraulic motor. Crank is not supplied on power rewind models. A pin lock assembly is optional on manual rewind reels. A 3/8" pitch chain is standard.

Inlet: 1/2" up to 1" female/male NPT 90° swivel joint. Straight swivel joint may be specified at extra cost.

Gooseneck: 1/2", 3/4", 1" female NPT. Other sizes and/or threads, including garden hose thread, can be furnished when specified.

The standard color for this series is red.

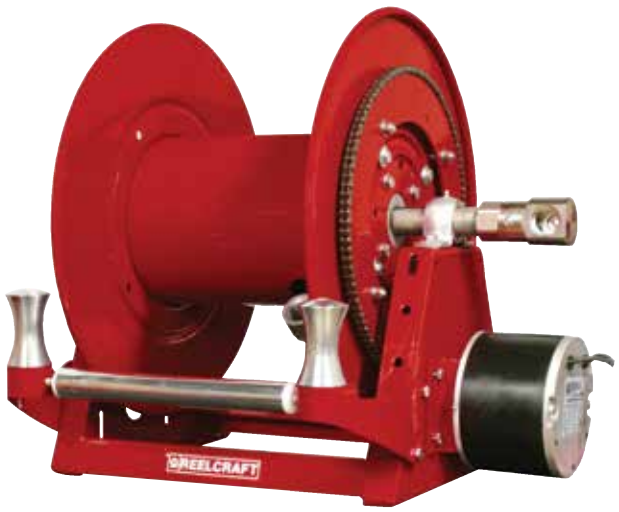

Shown with optional three-way roller bracket.

Nonexplosion-proof motor is standard "E" (pictured). Explosion proof (EP) motor is available upon request.

Made in USA

Built to order, not returnable.

Product temperatures range from -20 °F to +225 °F and standard pressures to 3000 psi. Other temperatures or pressures can be furnished at extra cost; consult manufacturer.

Dimensions Diagram

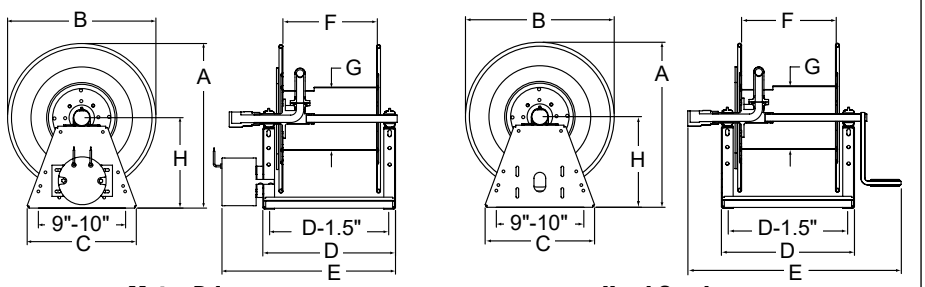

Specification - Hose Capacity and Reel Dimensions

KEY: CRK = hand crank; "E" = nonexplosion-proof electric motor; EP = explosion-proof motor; AIR = air moter; BEVEL = bevel crank

Hose I.D.	in	1/2	3/4	1
	mm	13	19	25
Hose O.D.	in	0.875	1.28	1.563
	mm	22	33	40

Model		Hose Length			Weight Crank*	Weight Motor*	Weight Bevel*		A	B	C	D	E CRK	E "E"	E EP	E AIR	E BEVEL	F	G	H
1200-19-6	ft	120	40	35	41 LB	58 LB	48 LB	in	21.1	19	14	11	22	16.5	18.5	16	24	6	8	11.6
	m	37	12	11	19 KG	26 KG	22 KG	mm	536	483	356	279	559	419	470	406	610	152	203	295
1200-19-12	ft	255	95	80	43 LB	60 LB	50 LB	in	21.1	19	14	17	28	22.5	24.5	22	30	12	8	11.6
	m	78	29	24	20 KG	27 KG	23 KG	mm	536	483	356	432	711	572	622	559	762	305	203	295
1200-19-18	ft	395	145	125	44 LB	61 LB	51 LB	in	21.1	19	14	23	34	28.5	30.5	28	36	18	8	11.6
	m	120	44	38	20 KG	28 KG	23 KG	mm	536	483	356	584	864	724	775	711	914	457	203	295
1200-19-22	ft	490	180	160	45 LB	62 LB	52 LB	in	21.1	19	14	27	38	32.5	34.5	32	40	22	8	11.6
	m	149	55	49	20 KG	28 KG	24 KG	mm	536	483	356	686	965	826	876	813	1016	559	203	295
1200-19-28	ft	630	220	190	46 LB	63 LB	53 LB	in	21.1	19	14	33	44	38.5	40.5	38	46	28	8	11.6
	m	192	67	58	21 KG	29 KG	24 KG	mm	536	483	356	838	1118	978	1029	965	1168	711	203	295
1200-23-6	ft	145	70	40	49 LB	66 LB	56 LB	in	25.1	23	15.25	11	22	16.5	18.5	16	24	6	11.25	13.6
	m	44	21	12	22 KG	30 KG	25 KG	mm	638	584	387	279	559	419	470	406	610	152	286	345
1200-23-12	ft	315	160	100	51 LB	68 LB	58 LB	in	25.1	23	15.25	17	28	22.5	24.5	22	30	12	11.25	13.6
	m	96	49	30	23 KG	31 KG	26 KG	mm	638	584	387	432	711	572	622	559	762	305	286	345
1200-23-18	ft	490	250	155	52 LB	69 LB	59 LB	in	25.1	23	15.25	23	34	28.5	30.5	28	36	18	11.25	13.6
	m	149	76	47	24 KG	31 KG	27 KG	mm	638	584	387	584	864	724	775	711	914	457	286	345
1200-23-22	ft	610	300	195	53 LB	70 LB	60 LB	in	25.1	23	15.25	27	38	32.5	34.5	32	40	22	11.25	13.6
	m	186	91	59	24 KG	32 KG	27 KG	mm	638	584	387	686	965	826	876	813	1016	559	286	345
1200-23-28	ft	780	370	240	54 LB	71 LB	61 LB	in	25.1	23	15.25	33	44	38.5	40.5	38	46	28	11.25	13.6
	m	238	113	73	24 KG	32 KG	28 KG	mm	638	584	387	838	1118	978	1029	965	1168	711	286	345

Reelcraft's reel configurator can quickly and accurately quote standard large frame reels.
Refer to page 27 for more information. Refer to page 28 to build a representative model number.
Final part number assigned upon quote. Refer to chart on page 31 for weight adders.

Prop 65: ⚠ WARNING:
Cancer and Reproductive Harm
www.P65Warnings.ca.gov.

Heavy Duty Large Frame Reels
Nordic Series 2400

1/2", 3/4" or 1" fluid path for 1/2" through 1" I.D. hose

Rewind: Gear-drive rewind or chain and sprocket drive powered by A.C. or D.C. electric motor, compressed air motor or hydraulic motor.

Inlet: 1/2" up to 1" female/male NPT 90° swivel joint. Straight swivel joint may be specified at extra cost.

Gooseneck: 1/2" up to 1" female/male NPT. Other sizes and/or threads, including male NST and male garden hose thread, can be furnished when specified.

Product temperatures from -20 °F to +225 °F and standard pressures to 3000 psi. Reels to operate at other temperatures or pressures can be furnished at extra cost, consult manufacturer. The standard color for this series is red or gray. Add 12" to B dimension when crank is in rewind position.

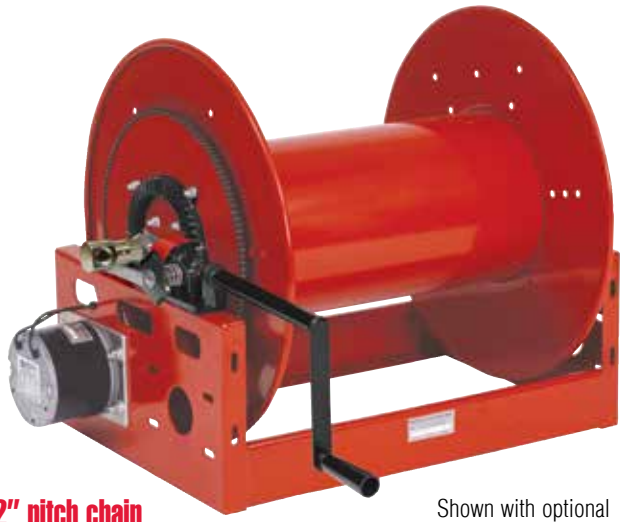

1/2" pitch chain now standard

Shown with optional bevel crank.

Made in USA

Dimensions Diagram

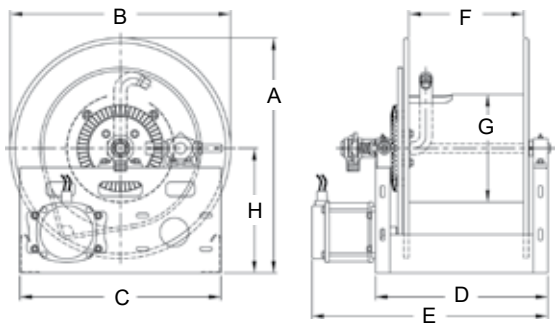

Fire Service / Booster Reels

The **aluminum Series 2450** reel for booster hose is corrosion-resistant and weighs up to 50% less than standard steel booster reels. Features include an aluminum spool and frame assembly, plated steel fluid path and plated sprocket and fasteners. **No painting or finishing is required.**

Built to order, not returnable.

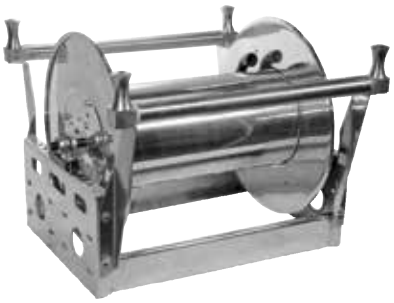

Hose I.D.	in	1/2	3/4	1
	mm	13	19	25
Hose O.D.	in	.875	1.281	1.563
	mm	22	33	40

Specification - Hose Capacity and Reel Dimensions

KEY: CRK = hand crank; ELC = electric motor; HYD = hydraulic motor; AIR = air motor

Model		Hose Length (other std. lengths available)			Est. Weight		A	B CRK	B ELC	B AIR	B HYD	C	D	E CRK	E ELC	E AIR	E HYD	F	G	H
2400-19-16	ft	285	110	60	70 LB	in	22.5	21	21	21	21	21	22	26	29	28	28	16	11.25	13
	m	87	34	18	32 KG	mm	572	533	533	533	533	533	559	660	737	711	711	406	286	330
2400-23-14	ft	390	175	110	74 LB	in	24.5	23	23	23	23	21	20	24	27	26	26	14	11.25	13
	m	119	53	34	34 KG	mm	622	584	584	584	584	533	508	610	686	660	660	356	286	330
2400-23-18	ft	490	250	155	78 LB	in	24.5	23	23	23	23	21	24	28	31	30	30	18	11.25	13
	m	149	76	47	35 KG	mm	622	584	584	584	584	533	610	711	787	762	762	457	286	330
2400-23-20	ft	535	265	170	80 LB	in	24.5	23	23	23	23	21	26	30	33	32	32	20	11.25	13
	m	163	81	52	36 KG	mm	622	584	584	584	584	533	660	762	838	813	813	508	286	330
2400-23-24	ft	660	320	210	84 LB	in	24.5	23	23	23	23	21	30	34	37	36	36	24	11.25	13
	m	201	98	64	38 KG	mm	622	584	584	584	584	533	762	864	940	914	914	610	286	330
2400-25-8	ft	265	135	95	72 LB	in	26.5	25	25	25	25	21	14	18	21	20	20	8	11.25	14
	m	81	41	29	33 KG	mm	673	635	635	635	635	533	356	457	533	508	508	203	286	356
2400-25-14	ft	465	225	150	74 LB	in	26.5	25	25	25	25	21	20	24	27	26	26	14	11.25	14
	m	142	69	46	34 KG	mm	673	635	635	635	635	533	508	610	686	660	660	356	286	356
2400-31-8	ft	465	205	155	74 LB	in	32.5	31	31	31	31	24	14	18	21	20	20	8	11.25	17
	m	142	62	47	34 KG	mm	826	787	787	787	787	610	356	457	533	508	508	203	286	432
2400-31-10	ft	565	240	185	76 LB	in	32.5	31	31	31	31	24	16	20	23	22	22	10	11.25	17
	m	172	73	56	34 KG	mm	826	787	787	787	787	610	406	508	584	559	559	254	286	432
2400-31-16	ft	925	410	305	80 LB	in	32.5	31	31	31	31	24	22	26	29	28	28	16	11.25	17
	m	282	125	93	36 KG	mm	826	787	787	787	787	610	559	660	737	711	711	406	286	432

Prop 65: ⚠ **WARNING:** Cancer and Reproductive Harm www.P65Warnings.ca.gov.

Reelcraft's reel configurator can quickly and accurately quote standard large frame reels. Refer to page 27 for more information. Refer to page 28 to build a representative model number. Final part number assigned upon quote. Refer to chart on page 31 for weight adders.

Customer Service: 1.855.634.9109
All Other Calls: 1.800.444.3134

Heavy Duty Large Frame Reels

Nordic Series 3900

1 1/2" fluid path for 1" through 1 1/2" I.D. hose

Rewind: Gear-drive rewind or chain and sprocket drive powered by A.C. or D.C. electric motor, compressed air motor or hydraulic motor.

Inlet: 2" straight grooved fitting with 1 1/2" female NPT straight swivel joint is standard. 2" 90° grooved fitting with 1 1/2" NPT female available at extra cost.

Gooseneck: 1", 1 1/4" and 1 1/2" female/male NPT outlet. Other sizes and/or threads can be furnished and must be specified.

Add 12" to B dimension when crank is in rewind position.
The standard color for this series is red or gray.

Made in USA

1/2" pitch chain now standard
Shown with optional bevel crank.

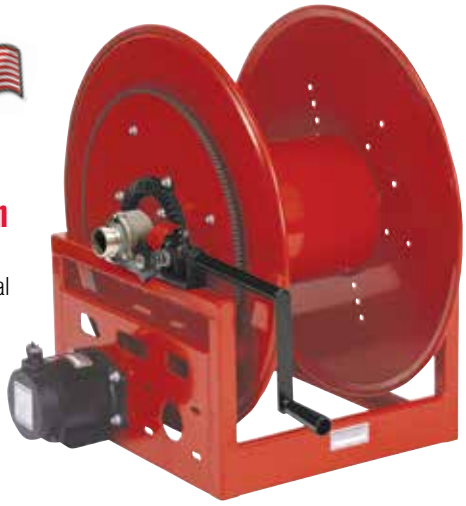

Built to order, not returnable.

Standard seals maximum temperature 174 °F (79 °C) and minimum temperature -20 °F (-29 °C). Extreme temperature seals maximum temperature 400 °F (204 °C) and minimum temperature -50 °F (-45 °C) and standard pressures to 600 psi. Other temperatures or pressures can be furnished at extra cost, consult manufacturer.

Dimensions Diagram

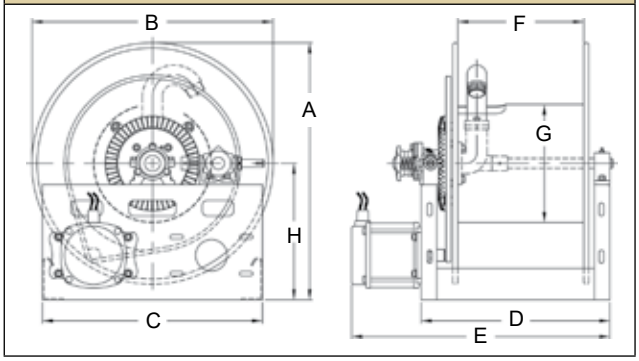

Note: Weights shown in chart are for crank rewind models.

Add these amounts and model number prefix for power rewind models.

Prefix	Type	LB / KG
EP	Electric	42 / 19
A	Air	26 / 12
H	Hyd	26 / 12

Specification - Hose Capacity and Reel Dimensions

KEY: CRK = hand crank; ELC = electric motor; HYD = hydraulic motor; AIR = air motor

Hose I.D.	in	1	1 1/4	1 3/8	1 1/2
	mm	25	32	35	38
Hose O.D.	in	1.563	1.813	2.000	2.063
	mm	40	46	51	52

Model	Hose Length					Est. Weight		A	B CRK	B ELC	B AIR	B HYD	C	D	E CRK	E ELC	E AIR	E HYD	F	G	H
3900-19-16	ft	60	50	50	45	90 LB	in	22.5	21	21	21	21	21	22	26	29	28	28	16	11.25	13
	m	18	15	15	14	41 KG	mm	572	533	533	533	533	533	559	660	737	711	711	406	286	330
3900-19-20	ft	70	65	60	55	93 LB	in	22.5	21	21	21	21	21	26	30	33	32	32	20	11.25	13
	m	21	20	18	17	42 KG	mm	572	533	533	533	533	533	660	762	838	813	813	508	286	330
3900-23-12	ft	100	60	60	50	87 LB	in	24.5	23	23	23	23	21	18	22	25	24	24	12	11.25	13
	m	30	18	18	15	39 KG	mm	622	584	584	584	584	533	457	559	635	610	610	305	286	330
3900-23-18	ft	155	90	95	85	93 LB	in	24.5	23	23	23	23	21	24	28	31	30	30	18	11.25	13
	m	47	27	29	26	42 KG	mm	622	584	584	584	584	533	610	711	787	762	762	457	286	330
3900-23-20	ft	170	110	105	95	95 LB	in	24.5	23	23	23	23	21	26	30	33	32	32	20	11.25	13
	m	52	34	32	29	42 KG	mm	622	584	584	584	584	533	660	762	838	813	813	508	286	330
3900-23-26	ft	225	140	135	125	100 LB	in	24.5	23	23	23	23	21	32	36	39	38	38	26	11.25	13
	m	69	43	41	38	45 KG	mm	622	584	584	584	584	533	813	914	991	965	965	660	286	330
3900-23-28	ft	240	150	145	135	103 LB	in	24.5	23	23	23	23	21	34	38	41	40	40	28	11.25	13
	m	73	46	44	41	47 KG	mm	622	584	584	584	584	533	864	965	1041	1016	1016	711	286	330
3900-23-36	ft	325	190	185	180	111 LB	in	24.5	23	23	23	23	21	42	46	49	48	48	36	11.25	13
	m	99	58	56	55	50 KG	mm	622	584	584	584	584	533	1067	1168	1245	1219	1219	914	286	330
3900-25-12	ft	135	90	60	50	89 LB	in	26.5	25	25	25	25	21	18	22	25	24	24	12	11.25	14
	m	41	27	18	15	40 KG	mm	673	635	635	635	635	533	457	559	635	610	610	305	286	356
3900-25-20	ft	230	160	105	95	97 LB	in	26.5	25	25	25	25	21	26	30	33	32	32	20	11.25	14
	m	70	49	32	29	44 KG	mm	673	635	635	635	635	533	660	762	838	813	813	508	286	356
3900-31-12	ft	215	155	125	105	92 LB	in	32.5	31	31	31	31	24	18	22	25	24	24	12	11.25	17
	m	66	47	38	32	42 KG	mm	826	787	787	787	787	610	457	559	635	610	610	305	286	432
3900-31-16	ft	305	210	170	150	96 LB	in	32.5	31	31	31	31	24	22	26	29	28	28	16	11.25	17
	m	93	64	52	46	44 KG	mm	826	787	787	787	787	610	559	660	737	711	711	406	286	432
3900-31-20	ft	365	290	210	190	100 LB	in	32.5	31	31	31	31	24	26	30	33	32	32	20	11.25	17
	m	111	88	64	58	45 KG	mm	826	787	787	787	787	610	660	762	838	813	813	508	286	432

Reelcraft's reel configurator can quickly and accurately quote standard large frame reels. Refer to page 27 for more information. Refer to page 28 to build a representative model number. Final part number assigned upon quote.

Prop 65: ⚠ **WARNING:**
Cancer and Reproductive Harm - www.P65Warnings.ca.gov.

Heavy Duty Large Frame Reels

Nordic Series 3900 LPG

1 1/2" or 2" fluid path for 1" through 2" I.D. hose

Rewind: Gear-drive or chain and sprocket drive powered by explosion proof A.C. or D.C. electric motor, compressed air motor or hydraulic motor.

Inlet: Full Circle® UL approved swivels available in 1", 1 1/2" and 2" as standard.

Hose Boss (optional accessory)
The Hose Boss Rewind Assist consists of a rewind switch mounted in an extended arm with two hose rollers. Assists in efficiently and safely unwinding and rewinding hose.



Now available in polished aluminum

Made in USA



Inset: Nordic Series 3900 LPG with optional Hose Boss

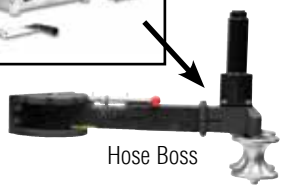

Hose Boss

Heavy Duty Spring Retractable Reels

Series 80000/D80000 - 1/2", 3/4", 1" I.D.

OPTIONS

Choose a reel model from the chart below, then use the suffix codes below to choose a flange/end plate material.

LP82000 OL□

Flange/End Plate Material	
S	Stainless Steel
P	Carbon Steel

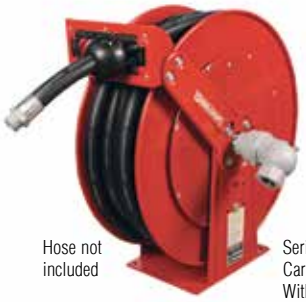

Hose not included

Series 80000 Carbon steel With Full Circle® swivel

Model without hose	Hose I.D.		Hose O.D.		Capacity		Pressure		Weight		A		B		C		D		E		F	
	in	mm	in	mm	ft	m	psi	bar	lbs	kg	in	mm	in	mm	in	mm	in	mm	in	mm	in	mm
Series 80000 / D80000: Spring Driven Reels																						
LP82000 OL□*	1/2	13	.845	21	100	30	300	21	82	37	25 3/8	645	24	610	10	254	6	152	15 3/8	391	8 1/8	206
LP83000 OL□*	3/4	19	1.188	30	50	15	350	24	82	37	25 3/8	645	24	610	10	254	6	152	15 3/8	391	8 1/8	206
LPD83000 OL□*	3/4	19	1.188	30	75	23	350	24	77	35	25 3/8	645	24	610	10 1/2	267	7 7/8	200	17 3/4	451	10 3/8	264
LPD84000 OL□*	1	25	1.500	38	50	15	350	24	77	35	25 3/8	645	24	610	10 1/2	267	7 7/8	200	17 7/8	454	10 3/8	264

*Choose flange/end plate material from charts above. Refer to page 13 for dimension chart.

Hose I.D.	in	1	1 1/4	1 1/2	2
	mm	25	32	38	51
Hose O.D.	in	1.563	1.813	2.063	2.563
	mm	40	46	52	65

Specification - Hose Capacity and Reel Dimensions
Refer to chart on page 31 for Series 3900 LPG dimensions.

Model		Hose Length				Est. Weight		A	B	C	D	E	F	G	H
3900-19-20	ft	70	65	55		103 LB	in	22.5	21	21	26	33	20	11.25	13
	m	21	20	17		47 KG	mm	572	533	533	660	838	508	286	330
3900-23-16	ft	140	80	75		100 LB	in	24.5	23	21	22	29	16	11.25	13
	m	43	24	23		45 KG	mm	622	584	533	559	737	406	286	330
3900-23-20	ft	170	110	95		105 LB	in	24.5	23	21	26	33	20	11.25	13
	m	52	34	29		48 KG	mm	622	584	533	660	838	508	286	330
3900-23-24	ft	210	130	115		110 LB	in	24.5	23	21	30	37	24	11.25	13
	m	64	40	35		50 KG	mm	622	584	533	762	940	610	286	330
3900-25-14	ft	150	105	65		102 LB	in	26.5	25	21	20	27	14	11.25	14
	m	46	32	20		46 KG	mm	673	635	533	508	686	356	286	356
3900-25-18	ft	210	135	85		105 LB	in	26.5	25	21	24	31	18	11.25	14
	m	64	41	26		48 KG	mm	673	635	533	610	787	457	286	356
3900-23-26	ft			95	35	112 LB	in	24.5	23	21	32	39	26	15	13
	m			29	11	51 LG	mm	622	584	533	813	991	660	381	330
3900-31-12	ft			95	55	102 LB	in	32.5	31	24	18	25	12	15	17
	m			29	17	46 KG	mm	826	787	610	457	635	305	381	432
3900-31-22	ft			185	110	115 LB	in	32.5	31	24	28	35	22	15	17
	m			56	34	52 KG	mm	826	787	610	711	889	559	381	432

Prop 65: ⚠ **WARNING:**
Cancer and Reproductive Harm - www.P65Warnings.ca.gov.

Refer to page 28 to build a representative model number including LPG swivel. Refer to charts on page 13 and 31 for dimensions.

Built to order, not returnable.

Customer Service: 1.855.634.9109
All Other Calls: 1.800.444.3134

Heavy Duty Large Frame Reels

Nordic Series 3700 & 5900

2", 3" or 4" fluid path for 1½" through 4" I.D. hose

Rewind: Gear-drive crank rewind or chain and sprocket drive powered by A.C. or D.C. electric motor, compressed air motor or hydraulic motor.

Inlet: 2" (Series 3700) / 3" (Series 5900) straight grooved fitting is standard. 4" (Series 5900) 90° grooved fitting and 24" diameter drum is standard. 90° grooved fitting swivel joint available at extra cost.

Gooseneck: 2" (Series 3700) / 3" (Series 5900) / 4" (Series 5900) female NPT. Other sizes and/or threads can be furnished and must be specified.

Series 5900 product temperatures from -50 °F to +400 °F and standard pressures to 300 psi. Series 3700 standard seals maximum temperature 174 °F (79 °C) and minimum temperature -20 °F (-29 °C). Extreme temperature seals maximum temperature 400 °F (204 °C) and minimum temperature -50 °F (-45 °C).

1/2" pitch chain now standard



Nordic Series 3700 Shown with optional bevel crank.



Nordic Series 5900 Shown with optional bevel crank.

Made in USA

Standard pressures to 300 psi. Other temperatures or pressures can be furnished at extra cost, consult manufacturer. The standard color for this series is red or gray. Add 12" to B dimension when crank is in rewind position.

Built to order, not returnable.

Hose I.D.	in	1 1/2	2	2 1/2	3	4
	mm	38	51	64	76	102
Hose O.D.	in	2.063	2.563	3.188	3.75	4.75
	mm	52	65	81	95	121

Specification - Hose Capacity and Reel Dimensions

KEY: CRK = hand crank; ELC = electric motor; HYD = hydraulic motor; AIR = air motor

Model	Hose Length					Est. Weight		A	B CRK	B ELC	B AIR	B HYD	C	D	E CRK	E ELC	E AIR	E HYD	F	G	H
3700-23-20	ft	70	25				114 LB	in	24.5	23	23	23	23	21	26	30	33	32	32	20	15	13
	m	21	8				52 KG	mm	622	584	584	584	584	533	660	762	838	813	813	508	381	330
3700-25-20	ft	70	55				124 LB	in	26.5	25	25	25	25	21	26	30	33	32	32	20	15	14
	m	21	17				56 KG	mm	673	635	635	635	635	533	660	762	838	813	813	508	381	356
3700-25-24	ft	85	75				128 LB	in	26.5	25	25	25	25	21	30	34	37	36	36	24	15	14
	m	26	23				58 KG	mm	673	635	635	635	635	533	762	864	940	914	914	610	381	356
3700-25-32	ft	115	100				136 LB	in	26.5	25	25	25	25	21	38	42	45	44	44	32	15	14
	m	35	30				62 KG	mm	673	635	635	635	635	533	965	1067	1143	1118	1118	813	381	356
3700-31-12	ft	95	55				134 LB	in	32.5	31	31	31	31	24	18	22	25	24	24	12	15	17
	m	29	17				61 KG	mm	826	787	787	787	787	610	457	559	635	610	610	305	381	432
3700-31-20	ft	170	95				142 LB	in	32.5	31	31	31	31	24	26	30	33	32	32	20	15	17
	m	52	29				64 KG	mm	826	787	787	787	787	610	660	762	838	813	813	508	381	432
3700-31-26	ft	225	135				148 LB	in	32.5	31	31	31	31	24	32	36	39	38	38	26	15	17
	m	69	41				67 KG	mm	826	787	787	787	787	610	813	914	991	965	965	660	381	432
3700-39-16	ft	230	165				182 LB	in	40.5	39	39	39	39	24	22	26	29	28	28	16	15	21
	m	70	50				83 KG	mm	1029	991	991	991	991	610	559	660	737	711	711	406	381	533
3700-39-24	ft	360	250				190 LB	in	40.5	39	39	39	39	24	30	34	37	36	36	24	15	21
	m	110	76				86 KG	mm	1029	991	991	991	991	610	762	864	940	914	914	610	381	533
5900-31-16	ft		60	25	20		140 LB	in	32.5	31	31	31	31	24	22	26	29	28	28	16	20	17
	m		18	8	6		64 KG	mm	826	787	787	787	787	610	559	660	737	711	711	406	508	432
5900-31-24	ft		90	35	30		150 LB	in	32.5	31	31	31	31	24	30	34	37	36	36	24	20	17
	m		27	11	9		68 KG	mm	826	787	787	787	787	610	762	864	940	914	914	610	508	432
5900-31-32	ft		125	50	40		160 LB	in	32.5	31	31	31	31	24	38	42	45	44	44	32	20	17
	m		38	15	12		73 KG	mm	826	787	787	787	787	610	965	1067	1143	1118	1118	813	508	432
5900-36-12	ft		65	30	35		146 LB	in	37.5	36	36	36	36	24	18	22	25	24	24	12	20	21
	m		20	9	11		66 KG	mm	953	914	914	914	914	610	457	559	635	610	610	305	508	533
5900-36-16	ft		100	55	45	15	150 LB	in	37.5	36	36	36	36	24	22	26	29	28	28	16	20	21
	m		30	17	14	5	68 KG	mm	953	914	914	914	914	610	559	660	737	711	711	406	508	533
5900-39-12	ft		95	55	35	25	180 LB	in	40.5	39	39	39	39	24	18	22	25	24	24	12	20	21
	m		29	17	11	8	82 KG	mm	1029	991	991	991	991	610	457	559	635	610	610	305	508	533
5900-39-16	ft		145	90	45	35	200 LB	in	40.5	39	39	39	39	24	22	26	29	28	28	16	20	21
	m		44	27	14	11	91 KG	mm	1029	991	991	991	991	610	559	660	737	711	711	406	508	533
5900-39-24	ft		220	125	65	60	210 LB	in	40.5	39	39	39	39	24	30	34	37	36	36	24	20	21
	m		67	38	20	18	95 KG	mm	1029	991	991	991	991	610	762	864	940	914	914	610	508	533

Reelcraft's reel configurator can quickly and accurately quote standard large frame reels. Refer to page 27 for more information. Refer to page 28 to build a representative model number. Final part number assigned upon quote. Refer to chart on page 31 for weight adders and dimensions.

Prop 65: ⚠ **WARNING:** Cancer and Reproductive Harm www.P65Warnings.ca.gov.

Heavy Duty Large Frame Reels

Petroleum Service

1 1/2" or 2" fluid path for 1 1/4" through 2" I.D. hose

Rewind: Chain and sprocket drive powered by A.C. or D.C. electric motor, compressed air motor or hydraulic motor. 30° manual rewind assembly available at extra cost.

Inlet: 90° 2" grooved fitting is standard. Straight swivel joints may be specified at no extra cost.

Gooseneck: 1 1/4", 1 1/2" or 2" female/male NPT is available. Specify male or female fitting and hose size when ordering.

Brakes and locks: Manual friction brake and air operated caliper brake are standard.



Made in USA

Standard seals maximum temperature 174 °F (79 °C) and minimum temperature -20 °F (-29 °C). Extreme temperature seals maximum temperature 400 °F (204 °C) and minimum temperature -50 °F (-45 °C). Standard pressures to 300 psi. Other temperatures or pressures can be furnished at extra cost; consult manufacturer. The standard color for this series is red or gray.

Dimensions Diagram

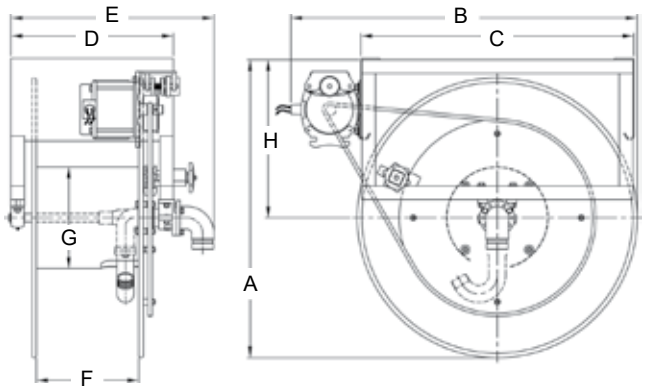

Hose I.D.	in	1 1/4	1 3/8	1 1/2	2	Specification - Hose Capacity and Reel Dimensions									
	mm	32	35	38	51										
Hose O.D.	in	1.813	2.000	2.063	2.563										
	mm	46	51	52	65										
Model	Hose Length					Est. Weight		A	B	C	D	E	F	G	H
3800-31-10	ft	130	105	85		174 LB	in	33	38.5	30	16	20.25	10	11.25	17.5
	m	40	32	26		79 KG	mm	838	978	762	406	514	254	286	445
3800-31-12	ft	155	125	105		176 LB	in	33	38.5	30	18	22.25	12	11.25	17.5
	m	47	38	32		80 KG	mm	838	978	762	457	565	305	286	445
3800-31-16	ft	210	170	150		180 LB	in	33	38.5	30	22	26.25	16	11.25	17.5
	m	64	52	46		82 KG	mm	838	978	762	559	667	406	286	445
3800-39-7	ft	120	105	105		212 LB	in	41	43.5	32	13	17.25	17	11.25	21.5
	m	37	32	32		96 KG	mm	1041	1105	813	330	438	432	286	546
3800-39-9	ft	160	140	140		214 LB	in	41	43.5	32	15	19.25	9	11.25	21.5
	m	49	43	43		97 KG	mm	1041	1105	813	381	489	229	286	546
3800-39-11	ft	240	175	175		216 LB	in	41	43.5	32	17	21.25	11	11.25	21.5
	m	73	53	53		98 KG	mm	1041	1105	813	432	540	279	286	546
3800-31-13	ft	170	110	110	70	178 LB	in	33	38.5	30	19	24.5	13	15	17.5
	m	52	34	34	21	81 KG	mm	838	978	762	483	622	330	381	445
3800-39-12	ft	230	195	165	110	218 LB	in	41	43.5	32	18	23.5	12	15	21.5
	m	70	59	50	34	99 KG	mm	1041	1105	813	457	597	305	381	546
3800-39-16	ft	305	255	230	165	224 LB	in	41	43.5	32	22	27.5	16	15	21.5
	m	93	78	70	50	102 KG	mm	1041	1105	813	559	699	406	381	546

Prop 65: ⚠ **WARNING:**
Cancer and Reproductive Harm - www.P65Warnings.ca.gov.

Refer to page 28 to build a representative model number.
Final part number assigned upon quote.

Built to order, not returnable.

Customer Service: 1.855.634.9109
All Other Calls: 1.800.444.3134

Heavy Duty Single Wrap Reels

Petroleum / Aviation Fuel Service

1 1/2", 2" or 3" fluid path for 1 3/8" through 3" I.D. hose



Made in USA

Rewind: Chain and sprocket drive powered by A.C. or D.C. electric motor, compressed air motor or hydraulic motor.

Inlet: 2" grooved fitting is standard for 1" through 2" ID hose. 3" grooved fitting is standard for 2 1/2" and 3" ID hose. 1 1/2", 2" and 3" NPT or BSPP available. 90° inlets available.

Gooseneck: 1 1/2", 2" and 3" NPT or BSPP. Specify male or female threads for gooseneck.

Brakes and locks: Air operated caliper brake and idler assembly is standard. Manual friction brake optional.

Materials: Standard frame and spool assembly are made of heavy duty steel construction. Also available in aluminum. The standard color for this series is red or gray.

Operating pressure: 300 psi maximum. Reels to operate at other pressure ratings available at extra cost. Consult manufacturer.

Operating temperatures: Maximum 400 °F (204 °C) / minimum -50 °F (-46 °C). Reels that are to operate at other temperature ratings are available at extra cost, consult manufacturer.

Hose I.D.		1 3/8	1 1/2	2	2 1/2	3
	in	35	38	51	64	76
Hose O.D.	mm	2.000	2.063	2.563	3.063	3.750
	in	51	52	65	81	95

Model		Hose Length						A	B	C	H
6000-47	ft	55	50	30	25	20	in	48.5	47	38.5	25
	m	17	15	9	8	6	mm	1232	1194	978	635
6000-55	ft	80	75	50	40	35	in	55.75	55	38.5	28.25
	m	24	23	15	12	11	mm	1416	1397	978	718
6000-62	ft	100	100	70	50	50	in	62.75	62	38.5	31.75
	m	30	30	21	15	15	mm	1594	1575	978	806
6000-68	ft	125	120	85	70	60	in	68.75	68	38.5	34.75
	m	38	37	26	21	18	mm	1746	1727	978	883
6000-72	ft	150	140	100	80	70	in	72.75	72	38.5	36.75
	m	46	43	30	24	21	mm	1848	1829	978	933

Hose I.D.	Dimensions							
	D		E		F		G*	
	in	mm	in	mm	in	mm	in	mm
1 3/8"	12	305	18.5	470	2.5	64	18	457
1 1/2"	12	305	18.5	470	2.5	64	18	457
2"	12	305	18.5	470	3.5	89	24	610
2 1/2"	13	330	19.5	495	3.5	89	24	610
3"	14	356	20.5	521	4.5	114	24	610

*Drum diameter conforms to API 1529 Appendix A.

Dimensions Diagram

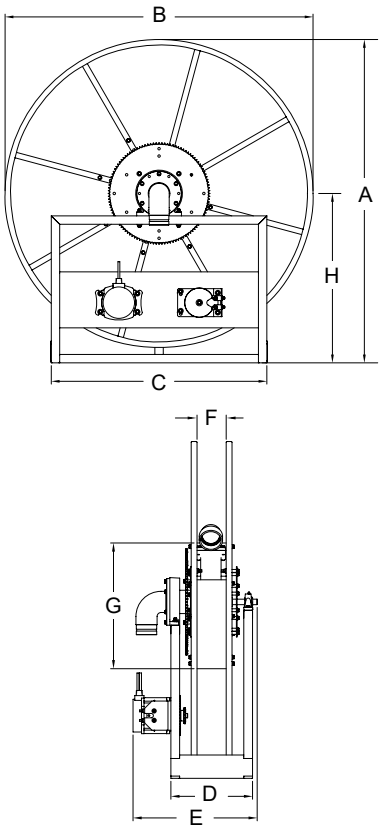

Model numbers are representative.
Final part number assigned upon quote.

Built to order, not returnable.

Prop 65: ⚠ **WARNING:**
Cancer and Reproductive Harm - www.P65Warnings.ca.gov.

Light/Medium Duty Cord Reels

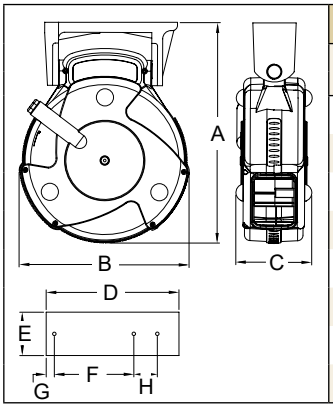

Dimensions - Size Index	1		2		3		4	
	in	mm	in	mm	in	mm	in	mm
A	11 7/8	302	15 1/4	387	13 3/4	349	17 3/4	451
B	9 1/4	235	11 1/2	292	11	279	17 1/4	438
C	3 3/4	95	5	127	8 3/4	222	11 1/8	283
D	2 3/4	98	9 3/16	233	1/4" mounting holes. If reels are to be mounted more than 15' overhead, consult manufacturer.			
E	2	51	3	76				
F	1 7/8	48	5 1/2	139				
G	7/16	11	9/16	14				
H	N/A		1 5/8	41				

Series LD Cord Reels

Designed for overhead mounting, these reels are compact, feature a powder coated steel housing, adjustable cable stop and a resettable circuit breaker.

Model with Cord	Cord Ending	Cord Specifications						Volts	Amps	Weight		Size Index #
		AWG	mm	# Cond	ft	m	Type			lbs	kg	
LD2040 163 2*	#2	16	1.33	3	40	12	SJTW	120	0.3	11	5	1
LD2030 163 9	#9	16	1.33	3	30	9	SJTW	125	10	8	4	1
LD2030 143 9	#9	14	2.08	3	30	9	SJTW	125	13	9	4	1

*Requires a minimum of 5' hanging cable (outside reel). Designed for ceiling mount. 2' pigtail with 3 prong plug included.

Series LG Cord Reels

The medium duty Series LG cord reels are constructed from high-impact resistant composite materials to be lighter and compact. They feature an adjustable cable stop, detachable mounting bracket, and a circuit breaker that can be reset.

Model with Cord	Cord Ending	Cord Specifications						Volts	Amps	Weight		Size Index #
		AWG	mm	# Cond	ft	m	Type			lbs	kg	
LG3050 163 8*	#8	16	1.33	3	50	15	SJTW	120	10	13	6	2
★ **LG3050 143 10**	#10	14	2.08	3	50	15	SJTOW	125	12	13	6	2
LG3050 143 9	#9	14	2.08	3	50	15	SJTW	125	13	14	6	2
★ **LG3075 143 9Q**	#9Q	14	2.08	3	75	23	SJTOW	125	10	20	9	2
LG3040 123 9	#9	12	3.32	3	40	12	SJTW	125	15	14	6	2
★ **LG3065 123 9Q**	#9Q	12	3.32	3	65	20	SJTOW	125	15	24	11	2

*Requires a minimum of five feet hanging cable (outside reel). 3' pigtail with 3 prong plug included.

★ **NEW models coming soon!**

Series LH Hand Crank Reels

Designed with the contractor in mind, Series LH medium duty hand crank reels are portable and deliver power where and when it is necessary. They feature four circuit breaker protected outlets and a corrosion resistant powder coating.

Model with Cord*	Cord Ending	Cord Specifications						Volts	Amps	Weight		Size Index #
		AWG	mm	# Cond	ft	m	Type			lbs	kg	
LH2080 143	4 Outlets	14	2.08	3	80	24	SJTW	125	10	15	7	3
LH3100*	4 Outlets	10	5.37	3	100	30	STW	125	15	13	6	4

*Does not include cord.

Products on this page are warranted for 1 year.

Cord Options



#2 - Fluorescent Light
13 watt fluorescent light with shock-resistant lamp holder and shatter-resistant tube with switch. (models are UL listed in United States)



#8 - Fluorescent Light
13 watt fluorescent light features an on/off switch on the handle and an outlet. (models are UL listed in United States)



#9 - Triple Outlet
Triple outlet with grounded receptacles. For maximum ratings, consult manufacturer. (models are UL listed in United States and Canada)



#9Q - Quad Outlet
Circuit breaker protected, fanned quad 4 grounded NEMA5-15 outlets with LED power "on" indicator light. (models are ETL listed)



#10 - LED Light
1300 Lumen LED with bright COB illumination; grounded 12 amp outlet and on-off switch on handle. (models are ETL listed)



LD2040 163 2



LD2030 163 9



LG3050 143 9



LH3100



LH2080 143

Prop 65: ⚠ **WARNING:**
Cancer and Reproductive Harm - www.P65Warnings.ca.gov.

Models listed with an icon can ship same day upon request when the order is received by 1:00 PM Eastern Time for quantities of 10 or fewer.

Indiana Warehouse | Indiana & California Warehouses | California Warehouse | Canadian Warehouse

Customer Service: 1.855.634.9109
All Other Calls: 1.800.444.3134

Better by Design

- All models supplied with cord are complete with a 4-5 foot pigtail and three-prong plug (flying lead reels supplied with conduit box)
- Adjustable cord stop supplied on models with cord

Adjustable Bumper Stop
Allows any desired length of cord to be maintained outside the reel.

Corrosion-Resistant
Steel components are individually powder coated to virtually eliminate corrosion.

Reelcraft offers many styles of outlets and lamps
- Single receptacle
- Duplex outlet box
- Triple tap
- R.V. plug
- Fluorescent
- Incandescent
- LED
- Flying lead

Easy to Mount
Attaches to most structurally sound surfaces. Edges are curved for safety. **Note:** Swing brackets should be used if cords are pulled at more than 45°, see page 49.



Adjustable Guide Arm
Multiple guide arm positions for versatile uses and easier field adjustment.

Enclosed Drive Spring
Drive mechanism is enclosed for protection against the environment.

Long Life Drive Spring
Declutching arbor virtually eliminates possibility of spring damage due to reverse winding of reel spool.

UL LISTED CSA

Structural Strength
Robotically welded heavy gauge steel frame.

Made in USA

L 4 0 5 0 1 6 3 3

REEL SERIES
40 = 4000 SERIES
45 = 4500 SERIES
55 = 5500 SERIES
57 = 5700 SERIES
70 = 7000 SERIES
or 70000 SERIES

FOR REFERENCE ONLY

WIRE SIZE
10 = 10 GAUGE
12 = 12 GAUGE
16 = 16 GAUGE

LENGTH OF CORD
00 = W/O CORD
35 = 35 FEET
45 = 45 FEET
50 = 50 FEET
75 = 75 FEET
100 = 100 FEET

NO. OF CONDUCTORS
2 = TWO CONDUCTOR
3 = THREE CONDUCTOR
4 = FOUR CONDUCTOR

STYLE NUMBERS
NONE = OPEN END
1 = INCANDESCENT LAMP
2 = FLUORESCENT LAMP
3 = SINGLE RECEPTACLE
4 = R.V. PLUG (M)
5 = INCANDESCENT NON-SPARKING
6x = FLUORESCENT EXPLOSION PROOF
7 = DUPLEX OUTLET BOX (F)
8 = FLUORESCENT WITH OUTLET
9 = TRI TAP
10 = LED LAMP
X = FLYING LEAD

Model Number Significance
This chart is for reference purposes only. Reels cannot be ordered by selecting from this chart. Please refer to selection charts on pages 38-39 or consult manufacturer for any questions about option combinations.

Model	Outside Diameter of Cord	Cord Specifications			
		AWG	mm²	# Cond.	Type
600193	.320" - .530"	16	1.33	3	SJO
1-HR1004-A	.438" - .624"	12	3.32	3	SJO
600267	.645"	10	5.37	3	SO
1-HR1004	.625" - .749"	12	3.32	3	SO
3-HR1004-3	1.06" - 1.30"	6	8.00	3	SO

Power and Light Cord Reels | Series L 4000 / L 5000 / L 7000 / L 70000



L 70100 123 3A

Made in USA

UL LISTED

CSA



L 4545 123 9G

Cord Options

	**#3 - Single Receptacle** Single 15 AMP with clamp type strain relief for both 16 AWG and 12 AWG cord. NEMA 5-15R
	**#3A - Single Receptacle** Single 20 AMP. NEMA 5-20R
	**#3B - Twist Lock Connector** Single 20 AMP with twist lock connector. NEMA L5-20R
	**#4 - R.V. Plug** Male rubber plug used with recreational vehicles (RV's).
	**#7/7A/7B - Duplex Outlet Box** Duplex outlet box with flip-top lid. GFCI protection on #7 and 7A.
	**#9/9G - Triple Tap** Molded triple tap. GFCI protection on #9G only.
	**X - Flying Lead** Bare cord or cable endings and conduit box.

Prop 65: ⚠ **WARNING:** Cancer and Reproductive Harm www.P65Warnings.ca.gov.

Model with Cord	Cord Ending	Cord Specifications						Volts	Amps	Shipping Weight		Size Index #
		AWG	mm²	# Cond.	ft	m	Type			lbs	kg	
L 4035 163 3	Single Receptacle	16	1.33	3	35	11	SJTOW	125	13	25	11	1
L 4050 163 3	Single Receptacle	16	1.33	3	50	15	SJTOW	125	13	26	12	1
L 4545 123 3	Single Receptacle	12	3.32	3	45	14	SJEOOW	125	15	27	12	1
L 5550 123 3	Single Receptacle	12	3.32	3	50	15	SJEOOW	125	15	44	20	3
L 70075 123 3	Single Receptacle	12	3.32	3	75	23	SEOOW	125	15	70	32	5
L 70100 123 3	Single Receptacle	12	3.32	3	100	30	SEOOW	125	15	74	34	5
L 4545 123 3A*	Single Receptacle	12	3.32	3	45	14	SJEOOW	125	20	28	13	1
L 5550 123 3A*	Single Receptacle	12	3.32	3	50	15	SJEOOW	125	20	44	20	3
L 70075 123 3A*	Single Receptacle	12	3.32	3	75	23	SEOOW	125	20	70	32	5
L 70100 123 3A*	Single Receptacle	12	3.32	3	100	30	SEOOW	125	20	74	34	5
L 4545 123 3B*	Twist Lock Connector	12	3.32	3	45	14	SJEOOW	125	20	28	13	1
L 5550 123 3B*	Twist Lock Connector	12	3.32	3	50	15	SJEOOW	125	20	44	20	3
L 70075 123 3B*	Twist Lock Connector	12	3.32	3	75	23	SEOOW	125	20	70	32	5
L 70100 123 3B*	Twist Lock Connector	12	3.32	3	100	30	SEOOW	125	20	74	34	5
L 5750 103 4	R.V. Plug	10	5.37	3	50	15	SOOW	125	30	50	23	4
L 4545 123 7	Duplex Outlet Box w/GFCI (F)**	12	3.32	3	45	14	SJEOOW	125	15	29	13	1
L 5550 123 7	Duplex Outlet Box w/GFCI (F)**	12	3.32	3	50	15	SEOOW	125	15	45	20	3
L 70075 123 7	Duplex Outlet Box w/GFCI (F)**	12	3.32	3	75	23	SEOOW	125	15	72	33	5
L 70100 123 7	Duplex Outlet Box w/GFCI (F)**	12	3.32	3	100	30	SEOOW	125	15	76	34	5
L 4545 123 7A	Duplex Outlet Box w/GFCI (F)**	12	3.32	3	45	14	SJEOOW	125	20	29	13	1
L 5550 123 7A	Duplex Outlet Box w/GFCI (F)**	12	3.32	3	50	15	SEOOW	125	20	45	20	3
L 70075 123 7A	Duplex Outlet Box w/GFCI (F)**	12	3.32	3	75	23	SEOOW	125	20	72	33	5
L 70100 123 7A	Duplex Outlet Box w/GFCI (F)**	12	3.32	3	100	30	SEOOW	125	20	76	34	5
L 4545 123 7B	Duplex Outlet Box	12	3.32	3	45	14	SJEOOW	125	20	29	13	1
L 4050 163 9	Triple Tap	16	1.33	3	50	15	SJEOOW	125	13	26	12	1
L 4545 123 9	Triple Tap	12	3.32	3	45	14	SJEOOW	125	15	28	13	1
L 70075 123 9	Triple Tap	12	3.32	3	75	23	SEOOW	125	15	71	32	5
L 70100 123 9	Triple Tap	12	3.32	3	100	30	SEOOW	125	15	75	34	5
L 4545 123 9G	Triple Tap w/GFCI(F)	12	3.32	3	45	14	SJEOOW	125	15	29	13	1
L 70075 123 9G	Triple Tap w/GFCI(F)	12	3.32	3	75	23	SEOOW	125	15	72	33	5
L 70100 123 9G	Triple Tap w/GFCI(F)	12	3.32	3	100	30	SEOOW	125	15	76	34	5

For indoor non-weather tight applications only. All models UL listed at 125 Volt 60 HZ single phase. *Add a "C" to the end of the part number to specify twist lock inlet plug. **The GFCI Receptacle is designed to protect from line-to-ground shock hazards. The Ground Fault Circuit Interrupter does not protect against short circuits or overloads; this is the function of the fuse or circuit breaker. Reference page 4 for guide arm positions. **NOTE:** Swing brackets should be used if cords are pulled at more than 45°, see page 49.

Flying Lead Model with Cord	Model No Cord	Cord Specifications						Volts/ Amps	Volts/ Amps	Shipping Weight*		Size Index #
		AWG	mm²	# Cond	ft	m	Type			lbs	kg	
L 4050 163 X	L 4000	16	1.33	3	50	15	SJEOOW	125 / 13	220 / 6.5	22	10	1
---------	L 4100	16	1.33	4	50	15	SJEOOW	125 / 10	220 / 5	22	10	1
L 4545 123 X	L 4500	12	3.32	3	45	14	SJEOOW	125 / 20	220 / 10	22	10	1
---------	L 5000	10	5.27	3	35	11	SO	125 / 30	220 / 15	29	13	2
---------	L 5400	12	3.32	3	35	11	SJEOOW	125 / 13	220 / 6.5	25	11	2
L 5550 123 X	L 5500	12	3.32	3	50	15	SJEOOW	125 / 20	220 / 10	35	16	3
L 70075 123 X	L 70075	12	3.32	3	75	23	SEOOW	125 / 20	220 / 10	69	31	6
L 70100 123 X	L 70100	12	3.32	3	100	30	SEOOW	125 / 20	220 / 10	73	33	6
L 5550 124 X	L 5500 124	12	3.32	4	50	15	SEOOW	--------	600 / 16	43	20	3
L 70100 124 X	L 70100 124	12	3.32	4	100	30	SEOOW	--------	600 / 16	75	34	6
L 5750 103 X	L 5700	10	5.27	3	50	15	SEOOW	125 / 30	220 / 15	37	17	4
---------	L 7000	6	13.3	4	35	11	SOOW	--------	220 / 45	41	19	**
L 7050 104 X	--------	10	5.27	4	50	15	SEOOW	--------	600 / 20	65	29	**

For indoor non-weather tight applications only. All models UL listed at 125 Volt 60 HZ single phase. *Weight of model without cord. **Refer to reelcraft.com. Reference page 4 for guide arm positions.

Customer Service: 1.855.634.9109
All Other Calls: 1.800.444.3134

Power and Light Cord Reels | Series L 4000 / L 5000 / L 7000 / L 70000

Model with Cord	Cord Ending	Cord Specifications						Volts	Amps	Shipping Weight		Size Index #
		AWG	mm²	# Cond	ft	m	Type			lbs	kg	
L 4035 163 1	*Incandescent	16	1.33	3	35	11	SJTOW	125	10	23	10	1
L 4050 163 1 CA	*Incandescent	16	1.33	3	50	15	SJTOW	125	10	27	12	1
L 4050 A 163 5**	*Incandescent	16	1.33	3	50	15	SJEOOW	125	13	28	13	1
L 5245 A 163 6X**	Fluorescent	16	1.33	3	45	14	SEOOW	125	0.13	39	18	2
L 4035 162 2	Fluorescent	16	1.33	2	35	11	SJTOW	125	0.3	25	11	1
L 4050 162 2	Fluorescent	16	1.33	2	50	15	SJTOW	125	0.3	26	12	1
L 4035 163 8	Fluorescent Light and Outlet	16	1.33	3	35	11	SJTO	125	10	25	11	1
L 4050 163 8	Fluorescent Light and Outlet	16	1.33	3	50	15	SJTO	125	10	27	12	1
L 4035 163 10	LED	16	1.33	3	35	11	SJTOW	125	13	26	12	1
L 4050 163 10 IN	LED	16	1.33	3	50	15	SJTOW	125	13	28	13	1

For indoor non-weather tight applications only. *Incandescent bulb 75 watt max. All models UL listed at 125 Volt 60 HZ single phase. **Models equipped with automatic on/off switch that activates power. **NOTE:** Swing brackets should be used if cords are pulled at more than 45°, see page 49. Reference page 4 for guide arm positions.



L 4050 163 10

UL LISTED

CSA

Made in USA



L 4050 162 2

- ✓ Compact for critical space requirements
- ✓ Durable abrasion and corrosion resistant baked-on powder coat finish
- ✓ All models supplied with cord are complete with a 4-5 foot pigtail and three-prong plug (except flying lead reels)
- ✓ Wall, ceiling or bench mount
- ✓ Adjustable cord stop
- ✓ Engineered for industrial use

Cord Options



#1 - Incandescent Light (100 watt max)
- Single receptacle tool tap
- Push-through switch, metal grounded guard



#2 - Fluorescent Light (825 lumens)
- Durable shock absorbing lamp holder
- Shatter-resistant tube with switch



#5 - Incandescent Light (100 watt max)
- Rubber handle with vinyl-coated cage w/o switch or receptacle
- Automatic on/off switch at reel guide arm
- Complies with NEC #511-3, f., portable lighting equipment; meets OSHA requirements



#6 - Fluorescent Light
- Explosion proof 13 watt fluorescent hand lamp
- Automatic on/off switch at reel guide arm
- Suitable for Class 1, Div 1 group C and D locations **Note:** Reel is not explosion-proof.



#8 - Fluorescent Light (825 lumens)
- 120 V - 10 amp receptacle in-line on lamp handle
- Scratch guard protects lamp cover



#10 - LED Light (930 lumens)
- Two ultra high intensity 4-watt LEDs; single 3-watt end spot light
- Polycarbonate shatter-resistant light tube
- In-line tool tap, NEMA 5-15R configuration maximum 12 amp draw

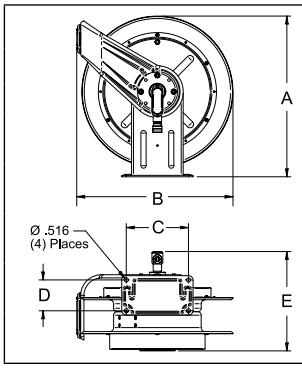

Dimensions - Size Index	5		6	
	in	mm	in	mm
A	20 1/4	514	20 1/4	514
B	19 3/4	502	19 3/4	502
C	7 13/16	198	7 13/16	198
D	3 7/8	98	3 7/8	98
E	11 3/4	298	12 1/2	318

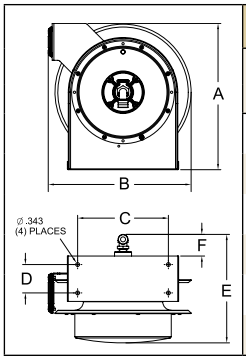

Dimensions - Size Index	1		2		3		4	
	in	mm	in	mm	in	mm	in	mm
A	12 7/8	327	14 3/8	365	17 5/8	448	17 5/8	448
B	12 5/8	321	14 1/4	362	16 3/4	425	16 3/4	425
C	8	203	9 3/4	248	9 3/4	248	9 3/4	248
D	2 1/2	64	2 1/2	64	2 1/2	64	2 1/2	64
E	9 3/8	239	10 1/2	267	10 1/2	267	12 1/2	318
F	1 3/4	44	2 1/8	54	2 1/8	54	2 1/8	54

Models listed with an icon can ship same day upon request when the order is received by 1:00 PM Eastern Time for quantities of 10 or fewer.

IN Indiana Warehouse
CA California Warehouse
IN CA Indiana & California Warehouses
Canadian Warehouse

Interactive Reel Catalog
Visit **www.reelcraft.com/catalog** for complete product specifications, available parts and accessories.

Prop 65: ⚠ **WARNING:** Cancer and Reproductive Harm www.P65Warnings.ca.gov.



L NM440 103 X

NEW!

Heavy Duty Spring Retractable Cord Reels

Reelcraft's new Series L NM400 cord reels are NEMA 4 rated and designed for protection against water or dust, indoor and outdoor. The guide arm is adjustable every 5° over a 270° arc allowing for the exact configuration to suit a wide range of applications. The containerized drive spring allows for safer, easier handling during maintenance. The heavy duty cast aluminum design and powder coat finish combine to produce a rugged, corrosion-resistant product.

UL LISTED CSA

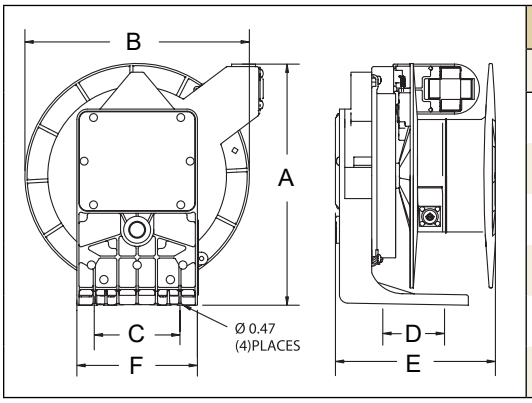

Dimensions		
	in	mm
A	14 1/2	368
B	13 1/2	343
C	4 7/16	113
D	3 1/16	78
E	9 5/8	244
F	7 1/4	184

Features

- ✓ NEMA 4 rating provides protection to water or dust, indoor and out
- ✓ Large, easy to access junction box
- ✓ Cast aluminum construction with yellow powder coat finish
- ✓ Reel design prohibits latch-out when cable is fully extended
- ✓ Containerized drive spring allows for safer, easier handling during maintenance
- ✓ All models are UL and CSA approved

Model with Cord	Cord Ending	Cord Specifications						Volts	Amps	Shipping Weight	
		AWG	mm²	# Cond.	ft	m	Type			lbs	kg
L NM450 163 X	Flying Lead	16	1.31	3	50	15	SOW	600	9	43	20
L NM450 143 X	Flying Lead	14	2.08	3	50	15	SOW	600	13	48	22
L NM445 144 X	Flying Lead	14	2.08	4	45	14	SOW	600	11	50	23
L NM425 123 X	Flying Lead	12	3.31	3	25	8	SOW	600	18	44	20
L NM450 123 X	Flying Lead	12	3.31	3	50	15	SOW	600	18	50	23
L NM440 124 X	Flying Lead	12	3.31	4	40	12	SOW	600	14	50	23
L NM440 103 X	Flying Lead	10	5.26	3	40	12	SOW	600	22	50	23
L NM430 104 X	Flying Lead	10	5.26	4	30	9	SOW	600	16	50	23

All models UL listed at 125 Volt 60 HZ single phase.

Prop 65: ⚠ **WARNING:** Cancer and Reproductive Harm www.P65Warnings.ca.gov.

Interactive Reel Catalog
Visit **www.reelcraft.com/catalog** for complete product specifications, available parts and accessories.

Models listed with an icon can ship same day upon request when the order is received by 1:00 PM Eastern Time for quantities of 10 or fewer.

- Indiana Warehouse
- California Warehouse
- Indiana & California Warehouses
- Canadian Warehouse

Customer Service: 1.855.634.9109
All Other Calls: 1.800.444.3134

Heavy Duty Stainless Steel Cord Reels

Reelcraft's new stainless steel power cord reels are designed for applications where corrosion or sanitation are a concern. The heavy gauge 304L stainless steel provides an easy to clean finish and superior corrosion resistance. A robust collector ring assures maximum conductivity current flow. All reels listed include a 4-5' pigtail, multi-positional guide arm, and adjustable cord stop. Models listed are for indoor, non-weather-tight applications only.

NEW!



LS 5445 123 3MWC

Made in USA

Features

- ✓ **Quiet** - These reels utilize a cam latching system, making them much quieter and smother than other reels in their class.
- ✓ **Compact** - A space saving design makes them ideal for minimum space requirements.
- ✓ **Superior strength** - A robotically welded base, engineered structural supports and high-grade industrial 304L stainless steel combine to give this reel superior strength and stability.
- ✓ **Long life drive spring** - Declutching arbor virtually eliminates possibility of spring damage due to reverse winding. Only the highest quality spring steel is used and conditioned to insure there are no imperfections offering maximum service life.

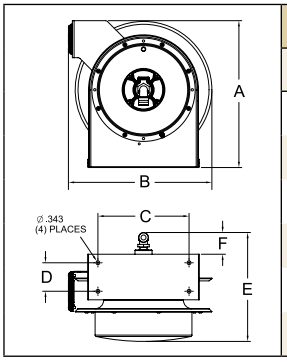

Dimensions	in	mm
A	14 3/8	365
B	14 1/4	362
C	9 3/4	248
D	2 1/2	64
E	10 1/2	267
F	2 1/8	54

Model with Cord	Cord Ending	Cord Specifications						Volts	Amps	Shipping Weight	
		AWG	mm²	# Cond.	ft	m	Type			lbs	kg
LS 5445 123 3	Single Receptacle	12	3.32	3	45	14	SJEOOW	125	15	31	14
LS 5445 123 3A	Single Receptacle	12	3.32	3	45	14	SJEOOW	125	20	32	15
LS 5425 123 3MWC*	Single Medical Grade Receptacle	12	3.32	3	25	8	SJEOOW	125	15	30	14
LS 5445 123 3MWC*	Single Medical Grade Receptacle	12	3.32	3	45	14	SJEOOW	125	15	32	15
LS 5415 123 3M	Single Medical Grade Receptacle	12	3.32	3	15	5	SJEOOW	125	15	28	13
LS 5425 123 3M	Single Medical Grade Receptacle	12	3.32	3	25	8	SJEOOW	125	15	29	13
LS 5445 123 3M	Single Medical Grade Receptacle	12	3.32	3	45	14	SJEOOW	125	15	31	14
LS 5445 123 7	Duplex Outlet Box w/GFCI (F)**	12	3.32	3	45	14	SJEOOW	125	15	33	15
LS 5445 123 7A	Duplex Outlet Box w/GFCI (F)**	12	3.32	3	45	14	SJEOOW	125	20	33	15
LS 5445 123 7B	Duplex Outlet Box	12	3.32	3	45	14	SJEOOW	125	20	33	15
LS 5445 123 9	Triple Tap	12	3.32	3	45	14	SJEOOW	125	15	32	15
LS 5445 123 9G	Triple Tap w/GFCI (F)**	12	3.32	3	45	14	SJEOOW	125	15	33	15
LS 5400	Bare Reel	12	3.32	3	35	11	SJEOOW	125	20	24	11
LS 5425 123 X	Flying Lead	12	3.32	3	25	8	SJEOOW	125	20	27	12
LS 5445 123 X	Flying Lead	12	3.32	3	45	14	SJEOOW	125	20	29	13

For indoor non-weather tight applications only. *Reel includes white cord and white electrical enclosure. **The GFCI Receptacle is designed to protect from line-to-ground shock hazards. The Ground Fault Circuit Interrupter does not protect against short circuits or overloads; this is the function of the fuse or circuit breaker.

Models listed with an icon can ship same day upon request when the order is received by 1:00 PM Eastern Time for quantities of 10 or fewer.

Indiana Warehouse
California Warehouse
Indiana & California Warehouses
Canadian Warehouse

Interactive Reel Catalog
Visit **www.reelcraft.com/catalog** for complete product specifications, available parts and accessories.

Prop 65: ⚠ **WARNING:** Cancer and Reproductive Harm www.P65Warnings.ca.gov.

High Capacity Cable Reels
Nordic Series CR2400/CR3100
for 3-conductor service

Made in USA

Series CR2400 - Direct crank rewind or chain and sprocket drive powered by A.C. or D.C. electric motor or compressed air motor. An adjustable spring drag device is used to brake the reel.

Series CR3100 - Powered by a rugged spring protected by a tamperproof housing, a rachet mechanism locks on payout of cable, but is easily disengaged with a pull to provide rewind.

Cable rollers: Series CR3100 models supplied with a 4-way roller guide assembly. Roller guide supplied with Series CR2400 models at extra cost. Roller position must be specified. If not specified, bottom wind will be supplied. Can be supplied or installed, consult manufacturer.



Nordic
Series CR3100

Note: A cable stop should be used to prevent damage to rollers and to permit adjustment of free cable length.

Many more sizes, from standard components, available on request. Consult manufacturer.

Dimensions Diagram

CR3100

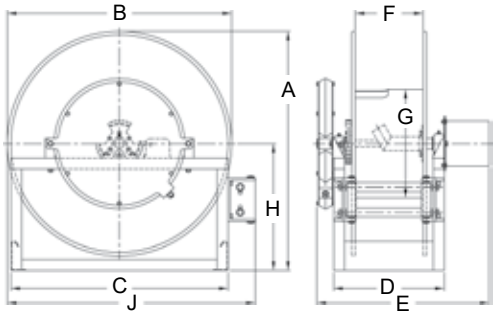

CR2400

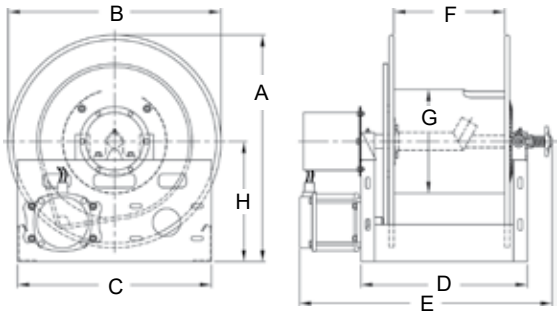

Gauge / No. of Conductors		16/3	14/3	12/3	10/3	8/3				Specifications - Cable Capacity and Reel Dimensions "E" dimension based on three conductor slip ring												
Cable O.D.	in	.375	.530	.580	.705	.750	1.000	1.250	1.500													
	mm	10	13	15	18	19	25	32	38													
Model	**Cable Length**									**Est. Weight**		**A**	**B**	**B PWR**	**C**	**D**	**E**	**E PWR**	**F**	**G**	**H**	**J**
Spring Driven Reels																						
CR3100-23-4	ft	85	85	100	100	90				92 LB	in	24.5	23		21	9	18		4	15	13	26
	m	26	26	30	30	27				42 KG	mm	622	584		533	229	457		102	381	330	660
CR3100-25-4	ft	95	100	100	100	100				97 LB	in	26.5	25		21	9	18		4	15	14	27
	m	29	30	30	30	30				44 KG	mm	673	635		533	229	457		102	381	356	686
CR3100-31-4	ft	120	120	130	130	130				118 LB	in	33	31		30	9.25	19		4	20	17.5	34.5
	m	37	37	40	40	40				54 KG	mm	838	787		762	235	483		102	508	445	876
Hand Crank / Motor Driven Reels																						
CR2400-23-12	ft	1900	930	775	520	430	240	155	105	72 LB	in	24.5	23	23	21	18	29	29	12	11.25	13	
	m	579	283	236	158	131	73	47	32	33 KG	mm	622	584	584	533	457	737	737	305	286	330	
CR2400-31-8	ft	2700	1350	1100	750	660	360	185	135	79 LB	in	32.5	31	31	24	14	25	25	8	11.25	17	
	m	823	411	335	229	201	110	56	41	36 KG	mm	826	787	787	610	356	635	635	203	286	432	

Prop 65: ⚠ **WARNING:**
Cancer and Reproductive Harm - www.P65Warnings.ca.gov.

Model numbers are representative.
Final part number assigned upon quote.
Built to order, not returnable.

Customer Service: 1.855.634.9109
All Other Calls: 1.800.444.3134

Heavy Duty Cord and Cable Storage Reels

Hand Crank, Bevel Crank & Motor Driven

Keep long lengths of expensive electrical cord off the ground and out of harm's way with Reelcraft's expanded Series 30000 line, which includes cable storage reels and live power cord. The reels are designed to handle long lengths of 10/3, 12/3 and 16/3 cable.

Reelcraft's Series 30000 storage reels and live power cord reels are constructed of heavy gauge steel and are assembled with vibration-proof, self-locking fasteners to ensure assembly integrity. They undergo a five-stage cleaning process and are individually powder-coated for the highest quality, corrosion-resistant paint adhesion. Suited for indoor, non weather-tight applications only.

Cord/Cable Storage Reels

Cord and cable storage reels are used for storage, unwinding, and winding of conductive cord/cable. The reel is not intended to be live and the power source must be disconnected while reeling/de-reeling to avoid twisting the wires. Series 30000 cable storage reels are available in hand crank only.



CA30112-CS
Cable not included

Live Power Cord Reels

Live power cord reels have collector rings that allow the reel to wind/unwind the cord/cable with live current without twisting the wires. Live reels offer the advantage of using a reel as an effective piece of operating equipment rather than a simple device for the storage of cable or cord. Series 30000 live power cord reels are available in direct hand crank, bevel gear crank or electric motor-driven rewind.



LE312 123 12D

Made in USA

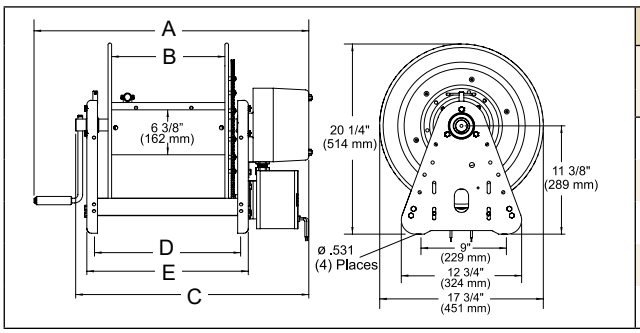

Dimensions - Size Index	1		2		3		4		5	
	in	mm	in	mm	in	mm	in	mm	in	mm
A	18 1/4	464	24 1/4	616	29 3/8	746	29 3/8	746	25	635
B	6	152	12	305	12	305	12	305	12	305
C	N/A		N/A		23 3/4	603	23 3/4	603	23 3/4	603
D	9 3/4	248	15 3/4	400	15 3/4	400	15 3/4	400	15 3/4	400
E	11	280	17	432	17	432	17	432	17	432

Model without Cable	Drive Type	Cord Specifications					Volts	Amps	Shipping Weight		Size Index #
		AWG	mm²	# Cond.	ft	m			lbs	kg	
CA30106-CS*	Hand Crank	10 12 16	5.211 3.131 1.0524	3 3 3	140 175 425	43 53 130	This reel is for storage only. Not intended to be live.		37	17	1
CA30112-CS*	Hand Crank	10 12 16	5.211 3.131 1.0524	3 3 3	280 350 850	86 106 260	This reel is for storage only. Not intended to be live.		46	21	2
LB312 123	Bevel Crank	12	3.131	3	200	61	600	25	51	23	3
LB312 103	Bevel Crank	10	5.211	3	200	61	600	30	52	24	3
LC312 123	Hand Crank	12	3.131	3	200	61	600	25	50	23	4
LC312 103	Hand Crank	10	5.211	3	200	61	600	30	51	23	4
LE312 123 12D	Motor Driven**	12	3.131	3	200	61	600	25	68	31	5
LE312 103 12D	Motor Driven**	10	5.211	3	200	61	600	30	69	31	5

NOTE: Cord must be fully unspooled before use. Actual fill capacities vary with cord O.D. and jacket type. Consult manufacturer for applications requiring cord types other than SO, SOW, or SJO. Reel suited for indoor, non-weather tight applications only. *Power source must be disconnected while reeling/de-reeling. Through shaft on cable storage reels facilitates cable sizes up to .969" O.D. for other sizes, consult manufacturer. **All motor driven models are 12 V DC non-explosion proof. Other motor options available upon request.

Interactive Reel Catalog

Visit us at **www.reelcraft.com/catalog** for complete product specifications, available parts and accessories.

Prop 65: ⚠ **WARNING:** Cancer and Reproductive Harm www.P65Warnings.ca.gov.

Models listed with an icon can ship same day upon request when the order is received by 1:00 PM Eastern Time for quantities of 10 or fewer.

IN Indiana Warehouse | IN CA Indiana & California Warehouses | CA California Warehouse | Canadian Warehouse

Complete Welding Series | Series TW / STW / BA



Ideal for locations where space is limited

TW5425 OLP



BA36106 L

Spring driven for hose lengths up to 60'



TW7450 OLP

Made in USA

NOTE: Reels without hose, Series TW5400 OLP(T), TW7400 OLP(T), TW84000 OLPT and TW86000 OLPT are U/L listed #70H2.

UL LISTED

Model with Hose	Shipping Weight lbs	kg	Hose I.D. in	mm	Hose O.D. in	mm	Hose Length ft	m	Pressure psi	bar	Hose Outlet in	Reel Inlet in	Model without hose & bumper	Shipping Weight lbs	kg	Size Index #
Oxygen / Acetylene (only) Hose Reels																
TW5425 OLP CA	26	12	1/4	6	.530	13	25	8	200	14	9/16 - 18(F)	1/4 NPT(F)	**TW5400 OLP**	21	10	1
STW3450 OLP IN	29	13	1/4	6	.530	13	50	15	300	21	9/16 - 18(F)	9/16 - 18(M)	----------	----------		See pg. 21
TW7450 OLP IN CA	50	23	1/4	6	.530	13	50	15	200	14	9/16 - 18(F)	1/4 NPT(F)	**TW7400 OLP** CA	42	19	2
TW7460 OLP	55	25	1/4	6	.530	13	60	18	200	14	9/16 - 18(F)	1/4 NPT(F)	**TW7400 OLP** CA	42	19	2
Series 30000 Hand Crank			1/4	6	.530	13	125	38	200	14	9/16 - 18(M)	1/4 NPT(F)	**BA36106 L**	50	23	4
Series 30000 Hand Crank			1/4	6	.530	13	250	76	200	14	9/16 - 18(M)	1/4 NPT(F)	**BA36112 L**	57	26	5
Welding Gas - Oxygen / Acetylene, Mapp, Propane, Natural and Fuel Gas (T-Grade) Hose Reels																
TW5425 OLPT IN	26	12	1/4	6	.530	13	25	8	200	14	9/16 - 18(F)	1/4 NPT(F)	**TW5400 OLPT**	22	10	1
TW7450 OLPT IN CA	50	23	1/4	6	.530	13	50	15	200	14	9/16 - 18(F)	1/4 NPT(F)	**TW7400 OLPT**	43	20	2
TW7460 OLPT	55	25	1/4	6	.530	13	60	18	200	14	9/16 - 18(F)	1/4 NPT(F)	**TW7400 OLPT**	43	20	2
TW84100 OLPT IN CA	101	46	1/4	6	.530	13	100	30	200	14	9/16 - 18(F)	9/16 - 18(M)	**TW84000 OLPT**	81	37	3
TW86050 OLPT	90	41	3/8	10	.625	16	50	15	200	14	9/16 - 18(F)	9/16 - 18(M)	**TW86000 OLPT**	86	39	3
TW86075 OLPT IN CA	99	45	3/8	10	.625	16	75	23	200	14	9/16 - 18(F)	9/16 - 18(M)	**TW86000 OLPT**	86	39	3

Acetylene and fuel gas (red) inlet 1/4" FPT / oxygen (green) inlet 1/4" FPT. 9/16-18 models above are B size. Acetylene/fuel gas side has a LH thread and the oxygen side has a RH thread. Models supplied less hose have male outlets. Maximum temperature 150 °F (65 °C). Reference page 4 for guide arm positions.

Inlet Hose Assemblies

Part Number	Hose I.D. in	mm	Length ft	m	End Fittings in	Pressure psi	bar	Weight lbs	kg
Twin Welding Oxygen/acetylene only (RM grade)									
S600100-2	1/4 dual	6	2	.61	9/16-18 LH/RH(M/F)	200	14	.70	.32
S600100-4	1/4 dual	6	4	1.22	9/16-18 LH/RH(M/F)	200	14	1.12	.51
S600100-6	1/4 dual	6	6	1.83	9/16-18 LH/RH(M/F)	200	14	1.90	.86
Twin Welding Mapp, propane, natural and fuel gas (T-grade)									
S601031-2	1/4 dual	6	2	.61	9/16-18 LH/RH(F)	200	14	.70	.32
S601031-4	1/4 dual	6	4	1.22	9/16-18 LH/RH(F)	200	14	1.12	.51
S601031-6	1/4 dual	6	6	1.83	9/16-18 LH/RH(F)	200	14	1.90	.86

Hose Inlet Connecting Fittings - Optional		
Model No.		Inlet Connection Fittings
90°	**S300090**	ACETYLENE B size 9/16 - 18 LH (M) x 1/4" NPT (M)
	S300091	OXYGEN B size 9/16 - 18 RH (M) x 1/4" NPT (M)
Straight	**261371**	OXYGEN B size 9/16 - 18 RH (M) x 3/8" NPT (M)
	261372	ACETYLENE/fuel gas - B size 9/16 - 18 LH (M) x 3/8" NPT (M)

Hose supplied on oxygen/acetylene reels is twin-Siamese type meeting R.M.A. and C.G.A. type V.D., grade RM specifications.

Prop 65: ⚠ **WARNING:**
Cancer and Reproductive Harm - www.P65Warnings.ca.gov.

Hose Assemblies

Part Number	I.D. & O.D. in	mm	Length ft	m	Pressure psi	bar	End Fittings in	Weight lbs	kg
Twin Welding Oxygen/acetylene only (RM grade) - LH/RH(F)									
601032-25	1/4	6	25	8	200	14	9/16-18	6.5	3.0
601032-50	1/4	6	50	15	200	14	9/16-18	12.1	5.5
601032-60	1/4	6	60	18	200	14	9/16-18	13.3	6.0
601032-100	1/4	6	100	30	200	14	9/16-18	24.2	11.0
Twin Welding Mapp, propane, natural and fuel gas (T-grade) - LH/RH(F)									
601031-25	1/4	6	25	8	200	14	9/16-18	6.5	3.0
601031-50	1/4	6	50	15	200	14	9/16-18	12.1	5.5
601031-60	1/4	6	60	18	200	14	9/16-18	14.4	6.50
601031-100	1/4	6	100	30	200	14	9/16-18	24.2	11.0

Advise product to be handled, maximum temperature and pressure fitting size when ordering. **Caution:** Be sure working pressure required does not exceed above ratings.

Models listed with an icon can ship same day upon request when the order is received by 1:00 PM Eastern Time for quantities of 10 or fewer.

IN Indiana Warehouse
CA California Warehouse
IN CA Indiana & California Warehouses
Canadian Warehouse

Customer Service: 1.855.634.9109
All Other Calls: 1.800.444.3134

Features

- ✓ Designed to improve safety in the work area with an increase in productivity and efficiency
- ✓ Full flow shaft swivels
- ✓ Independent dual swivel body manufactured from aluminum and hard-coated for wear resistance assures positive separation of gases due to its unique design
- ✓ Double-sealed, O-rings prevent leakage
- ✓ Swivel body and inlet are both permanently identified with machined groves on the acetylene side to assure proper installation
- ✓ Durable abrasion and corrosion resistant baked-on red powder-coated finish
- ✓ Reel frame, spool and drum are fabricated of heavy gauge steel

Lighter weight for hose lengths up to 50'



STW3450 OLP
*See page 21 for additional details.
Made in Australia



Dual welding, spring driven for high volume of gas

TW84100 OLPT
Available in T grade only

Made in USA

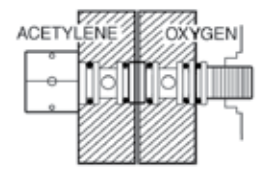

Dual swivel is an exclusive Reelcraft design

Independent dual swivel body manufactured from aluminum and hard coated for wear resistance. Assures positive separation of gases due to its unique design.

Double-sealed, special molded O-rings prevent leakage. Swivel body and inlet are both permanently identified with machined grooves on the acetylene side to assure proper installation. Available with TW5000 and TW7000 series reels.

"T" Grade Fuel Gas Reels

"T" grade hose reels are used for a wide variety of gases such as mapp gas, propane gas, natural gas and fuel gases. When ordering any welding hose reels you must specify the type of gas being used. To order "T" grade reels, add a suffix "T" to the TW models. Example - TW5425 OLPT.

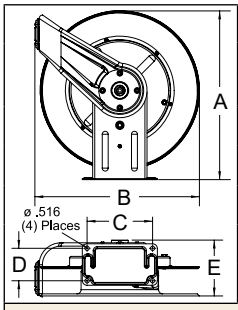

Series 5000 / 7000 / 80000

	1		2		3	
	in	mm	in	mm	in	mm
A	14 3/8	365	20 1/4	514	25 3/8	645
B	12 5/8	321	19 3/4	502	24	610
C	9 3/4	248	7 7/8	200	10	254
D	2 1/2	64	3 7/8	98	6	152
E	6	152	7 3/8	187	12 1/4	311

Series 5000 reels have four 5/16" (8 mm) diameter mounting holes.

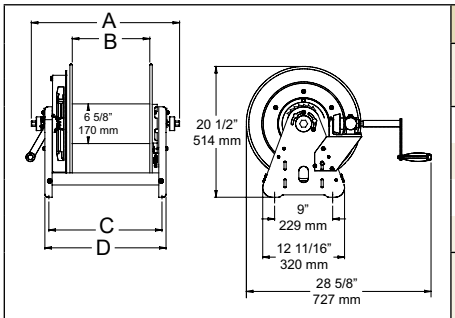

Series 30000

	4		5	
	in	mm	in	mm
A	15 5/8	397	21 5/8	550
B	6	152	12	305
C	9 3/4	248	15 3/4	400
D	11	280	17	432

Four 1/2" (12.7 mm) mounting holes. Overall length with crank handle removed is 17 3/4" (451 mm).

Models listed with an icon can ship same day upon request when the order is received by 1:00 PM Eastern Time for quantities of 10 or fewer.

- Indiana Warehouse
- California Warehouse
- Indiana & California Warehouses
- Canadian Warehouse

Interactive Reel Catalog

Visit **www.reelcraft.com/catalog** for complete product specifications, available parts and accessories.



CEA30006

Hand Crank / Spring Retractable Cable Welding Reels
Series CEA / WC

- Designed to improve safety in the work area with an increase in efficiency and productivity
- Cable reels have a current path through a continuous 400 or 700 AMP, 90 V DC (maximum) rated enclosed slip ring
- Welding cable reels store work lead or electrode lead, up to #4/0, safely and effectively when not in use. Each lead requires a separate reel. When welding also refer to ANSI/Asc Z 49.1
- Stores cable when not in use, eliminating tangled, kinked welding cables
- Maintains proper bend radius of cables, providing longer cable life
- Keeps work area and vehicles better organized, resulting in better space utilization



WC80001



WC7000

Made in USA

Caution: If cable reels are to be used for extended periods of time, unwind all cable from reel to prevent heat build-up. For indoor non weather-tight applications only.

Features - Hand Crank Reels

- ✓ All-bolted heavy gauge steel construction provides long life and ease of use and maintenance.
- ✓ Manual drum lock prevents spool from turning when not in use preventing unwanted pay out of cable.

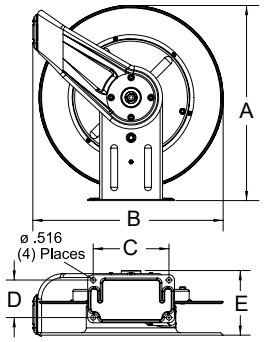

Size Index	1		2		3	
	in	mm	in	mm	in	mm
A	20 1/4	514	20 1/4	514	25 3/8	645
B	19 3/4	502	19 3/4	502	24	610
C	7 7/8	200	7 7/8	200	10	254
D	3 7/8	98	3 7/8	98	6	152
E	13 1/4	337	14	356	15 5/8	397

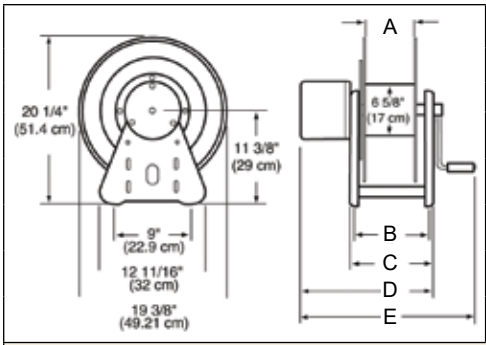

Size Index	4		5	
	in	mm	in	mm
A	6	152	12	305
B	9 3/4	248	15 3/4	400
C	11	279	17	432
D	15	381	21	533
E	21	533	27	686

Four 1/2" (12.7 mm) diameter mounting holes.

Interactive Reel Catalog
Visit **www.reelcraft.com/catalog** for complete product specifications, available parts and accessories.

Prop 65: ⚠ WARNING:
Cancer and Reproductive Harm - www.P65Warnings.ca.gov.

Cable Size	Bumper
#2, #1	1-HR1004-A
#1/0, #2/0, #3/0	1-HR1004
#4/0	2-HR1004-3

Model without cable & bumper	Cable Size #2 (34mm²) ft	m	#1 (42mm²) ft	m	#1/0 (54mm²) ft	m	#2/0 (67mm²) ft	m	#3/0 (85mm²) ft	m	#4/0 (107mm²) ft	m	Amps	Shipping Weight lbs	kg	Size Index #
CEA30006	300	91	250	76	200	61	150	46	---		---		400	46	21	4
CEA30012	500*	152	500*	152	400	122	300	91	---		---		400	54	24	5
WC7000	---		50	15	50	15	50	15	---		---		400	58	26	1
WCH7000	---		---		---		---		50	15	50	15	700	58	26	2
WC80001	---		75	23	75	23	75	23	---		---		400	102	46	3
WC80002	---		100	30	---		---		---		---		400	104	47	3
WCH80001	---		---		---		---		75	23	75	23	700	102	46	3

*May exceed maximum cable length allowable for most welding applications. **NOTE:** Each cable requires separate reel. Reference page 4 for guide arm positions.

Models listed with an icon can ship same day upon request when the order is received by 1:00 PM Eastern Time for quantities of 10 or fewer.

IN Indiana Warehouse | IN CA Indiana & California Warehouses | CA California Warehouse | Canadian Warehouse

Customer Service: 1.855.634.9109
All Other Calls: 1.800.444.3134

Hand Crank Reels

Up to 150' fuel gas
Up to 200' 12/3 cable

Made in USA

Ideal for applications where space, weight and flexibility are key, these reels are designed for manual winding of air/water/fuel gases hose, electric cord and welding cable. Versatile in function, select configurations to suit specific needs. Safe-T-Reels offer trouble-free management of large capacities of hose or cord.



Side-by-side combinations
T-2462-0



Stacked combinations
T-2464-0

Model without cable	AMP	Reel Capacity ft	Reel Capacity m	Cable AWG	Cable Cond	Shipping Weight lbs	Shipping Weight kg	Size Index #
Single Power Cable - 3 Conductor								
T-1535-003	30	150	45	8	3	18.5	5	1
T-1535-083-100*	33	100	30	8	3	50	23	1
T-1535-103-200*	24	200	61	10	3	81	37	1
T-1535-123-100*	25	100	30	12	3	46	21	1
T-1535-123-200*	20	200	61	12	3	71	32	1

*Includes cable.

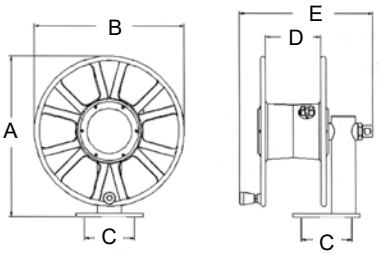

Dimensions - Size Index

	1 in	1 mm	2 in	2 mm	3 in	3 mm
A	19	483	19	483	19	483
B	18	457	18	457	18	457
C	6	152	6	152	6	152
D	6 1/2	165	6 1/2	165	12 1/2	165
E	15 3/4	401	16 1/4	412	21 3/4	552

Four 1/2" (12.7 mm) diameter mounting holes.

Model without hose	Hose I.D. in	Hose I.D. mm	Hose O.D. in	Hose O.D. mm	Reel Capacity ft	Reel Capacity m	Pressure psi	Pressure bar	Shipping Weight lbs	Shipping Weight kg	Size Index #
Single Spool Air/Water Hose Reels Maximum temperature 150 °F (65 °C)											
T-1115-08	1/2	13	.844	21	150	46	300	21	18	8	1
T-1116-08	1/2	13	.844	21	250	76	300	21	22	10	3
T-1117-12	3/4	19	1.188	30	50	15	250	17	18	8	1
T-1118-12	3/4	19	1.188	30	75	23	250	17	22	10	3
Single Spool Oxygen/Acetylene T-Grade Seals Maximum temperature 150 °F (65 °C)											
T-1225-04 CA	1/4	6	.530	13	150	45	200	14	19	9	2
T-1225-04-100T*	1/4	6	.530	13	100	30	200	14	44	20	2
T-1226-06	3/8	10	.625	16	100	30	200	14	19	9	2

*Includes hose.

Detail of heavy duty shaft
with tapered roller bearing for high rigidity



Shaft sizes are 1" to 1.25" in diameter, supported by tapered roller bearings with 2" to 2.3" housings.



T-1225-04-100T

Model without cable	AMP	Reel Capacity ft	Reel Capacity m	Shipping Weight lbs	Shipping Weight kg	Size Index #
Single Welding Cable 600 V, 2/0 Cable						
T-1460-0	250	200	61	32	15	2
Dual Side-by-Side Welding Cable (2) 600 V, 2/0 Cable						
T-2462-0 CA	250	200	61	51	23	5
Dual Stacked Welding Cable (2) 600 V, 2/0 Cable						
T-2464-0	250	200	61	62	28	4
Dual Side-by-Side Power Cable/Air Hose						
T-2735-2-0*	35	200 150	61 45	40	18	5

*Air hose side has 1/2" (12.7mm) inlet.

Dimensions - Size Index

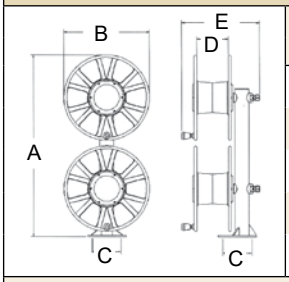

	4 in	4 mm	5 in	5 mm
A	38	965	19	483
B	18	457	18	457
C	6	152	6	152
D	6 1/2	165	6 1/2	165
E	16 1/4	737	29	737

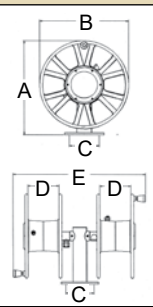

Four 1/2" (12.7 mm) diameter mounting holes.

Caution: Compressed air hoses should not be converted to oxygen service. Compressed air hoses are often contaminated with an oil coating, which can react explosively when oxygen is introduced. Oxygen/Acetylene cannot be combined with welding cable or power cord. **Note:** Models listed are without hose and/or cable except where listed. Weights listed above are actual product weight without packaging materials. Safe-T-Reels are available with cable or hose and in various combinations. Please consult Reelcraft customer service for additional information.

Prop 65: ⚠ **WARNING:** Cancer and Reproductive Harm www.P65Warnings.ca.gov.

Models listed with an icon can ship same day upon request when the order is received by 1:00 PM Eastern Time for quantities of 10 or fewer.

IN Indiana Warehouse · IN CA Indiana & California Warehouses · CA California Warehouse · Canadian Warehouse

Tool Balancers | Series TB / TBL

Top Five Benefits

1. Balances the weight of assembly tools, making them nearly weightless
2. Reduces operator fatigue
3. Improves safety and ergonomics
4. Increases productivity by keeping tools positioned for immediate use with minimal operator motion
5. Reduces tool damage by preventing tools from being accidentally dropped



Tool balancers make tools nearly weightless, reduce fatigue

TB 1-5 Dimensions

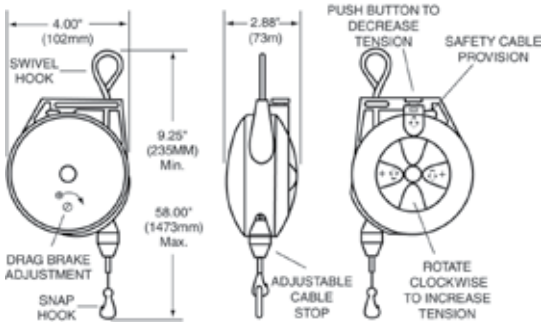

Model	Min - Max Load		Cable Length*		Shipping Weight	
	lbs	kg	ft	m	lbs	kg
TB 01	0.0 - 1.5	0.0 - 0.7	6	1.8	1.0	0.5
TB 03	1.5 - 3.0	0.7 - 1.4	6	1.8	1.0	0.5
TB 05	3.0 - 5.0	1.4 - 2.3	6	1.8	1.5	1

*Cable lengths listed are "active" or "working" cable. Safety tool clip and cable stop included. Maximum temperature 150 °F (65 °C).

TB 10-23 Dimensions

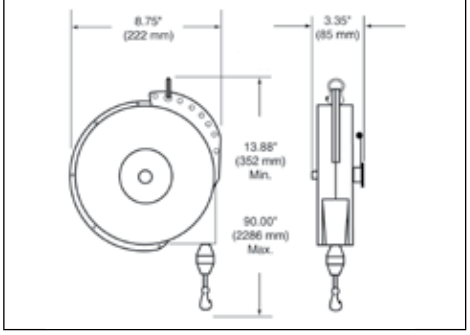



Model	Min - Max Load		Cable Length*		Shipping Weight		Ratchet Lock
	lbs	kg	ft	m	lbs	kg	
Constant Pull Reels - may be adjusted to balance through 6-18 in (152-457 mm) range.							
TB 10	5.0 - 10	2.3 - 4.5	8	2.4	9	4	NO
TB 12	8.0 - 12	3.6 - 5.4	8	2.4	10	4.5	NO
TB 15	10 - 15	4.5 - 6.8	8	2.4	10	4.5	NO
TB 23	16 - 23	7.2 - 10.4	8	2.4	10	4.5	NO
Reels with Ratchet Lock - retract tool upward when manually released.							
TBL 10	5.0 - 10	2.3 - 4.5	8	2.4	9	4	YES
TBL 12	8.0 - 12	3.6 - 5.4	8	2.4	10	4.5	YES
TBL 15	10 - 15	4.5 - 6.8	8	2.4	10	4.5	YES
TBL 23	16 - 23	7.2 - 10.4	8	2.4	10	4.5	YES

*Cable lengths listed are "active" or "working" cable. Safety tool clip and cable stop included. Maximum temperature 150 °F (65 °C).

Optional Accessories

Cables can be combined for added length

Overhang Cable	
Model No.	Length
600605-3	3.0 ft / 91.5 cm
600605-5	5.0 ft / 152.4 cm
Safety Cable/Chain	
600603*	1.0 ft / 30.5 cm
600604**	1.0 ft / 30.5 cm

*Nylon covered steel cable (1 to 6 lbs models)
**Steel link chain (10 to 23 lbs models)

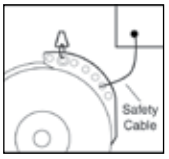

Strongly recommended, secondary steel cable or steel link chain. Prevents balancer from accidental fall. Balancers have extra holes for cable or chain.

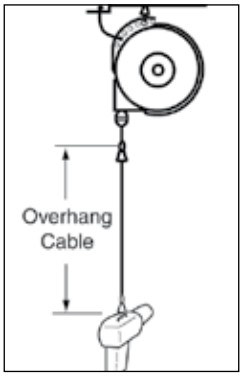

Nylon covered steel cable with safety clip. Brings tools closer to work area without unwinding cable from reel or mounting reel at lower height.

Prop 65: ⚠ **WARNING:**
Cancer and Reproductive Harm - www.P65Warnings.ca.gov.

Models listed with an icon can ship same day upon request when the order is received by 1:00 PM Eastern Time for quantities of 10 or fewer.

IN Indiana Warehouse | IN CA Indiana & California Warehouses | CA California Warehouse | Canadian Warehouse

Customer Service: 1.855.634.9109
All Other Calls: 1.800.444.3134

Roller Hose Guide Assemblies



HR1057 / HR1059



HR1145



S270109 / 600168

Model	Accommodates Hose O.D.	Weight	Dimensions											
			A		B		C		D		E		F	
	in (mm)	lbs	kg	in	mm	in	mm	in	mm	in	mm	in	mm	in	mm
HR1057	.603 (16) - .906 (23)	.25	.12	0.875	22.3	N/A		3.125	79.4	3.125	79.4	1.6875	42.9	1.6875	42.9
HR1059	.250 (6.4) - .625 (15.9)	.25	.12	0.625	15.9	N/A		3.125	79.4	3.125	79.4	1.6875	42.9	1.6875	42.9
HR1145	.603 (16) - .906 (23)	.34	.15	2	50.8	1	25.4	3.75	95.3	2.75	69.9	2.125	54.1	3.125	79.4
S270109	.900 (23) - 2.00 (50.8)	5.39	2.44	5.25	133.4	2.375	60.4	12	305	8	204	5	127	10.5	267
600168	.900 (23) - 1.38 (35)	1.75	.34	1.75	44.5	2.0625	27	5.125	130	5.125	130	4	102	4	102

These four-way roller guide assemblies are for use with reels on cabinet door openings and for similar locations where sharp edges may cut or damage the hose. The four-way design permits pulling or retracting hose at any angle. Model S270109 has nylon rollers mounted on an 11 gauge steel frame with pre-drilled mounting holes.

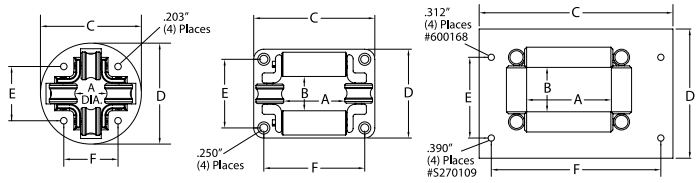

Note: A hose bumper should be used with the four-way roller hose guide assemblies to prevent damage to rollers and nozzles.

Additional Accessories



S600608



600801



600801-12

340° Pivot Base

Aligns reel to the direction of hose or cord run. May be mounted with reel upright or hanging. Weight 10 lbs (5 kg). **Note:** Use if hoses or cords are pulled at more than 45°. Refer to **www.reelcraft.com/accessories** for dimensional information.

For Reel Series	Part #
RT / 4000 / 5000 / 5005 / 7000 / HD70000	**S600608**
80000 / D80000 / 30006	**600801**
30012	**600801-12**

330° Pivot Base

Aligns reel to the direction of cord run. Use if cords are pulled at more than 45°.

For Reel Series	Part #
L NM400	**263109**



600992



600626

Wall-Mounted Universal Swing Bracket

Bracket will pivot approximately 180°. All steel construction with a durable baked on powder coat finish. Weight 6 lbs (3 kg).
Note: Use if hoses or cords are pulled at more than 45°.
Note: Not for overhead mounting. Refer to **www.reelcraft.com/accessories** for dimensional information.

For Reel Series	Part #
RT	**600992**
4000 / 5000	**600993**
RT / 4000 / 5000 / 5005 / 7000 / HD70000	**600626**
80000 / D80000 / DP5000 / DP7000	**600980**



600295



600230

Top Mounting Channels and Beam Clamps

600370 Top channel and beam clamps - for one reel
600295 Top channel and beam clamps - for two reels

For mounting Series 7000 reels to an I-beam or overhead support. Mounting channels can be mounted end to end to mount three or more reels. To permit the mounting of Reelcraft Series RT, 4000, 5000, 5005 and electric cord reels on mounting channel, an adaptor assembly must be used (#600230).

600230 Adaptor Assembly
Used with top channels and beam clamps only.

Roller Guide Assemblies

Three-way rollers



Four- way rollers (multi-position)



Spools and blocks are chrome-plated to resist corrosion and abrasion. Rollers speed handling and reduce wear on hose. All painted parts are finished with durable abrasion resistant baked-on powder coat. Delrin bearing surfaces give a quiet operation with minimum wear and all features combine to give trouble-free maximum service life.

For the special UHMW composite rollers, add a "U" at the end of the part number. (Example: S600693-1U)



Hose Reel Spool Size		Bottom Wind Roller bracket assembly model number	Top Wind Roller bracket assembly model number	Multi Position Roller bracket assembly model number
in	mm			
Series 30000 - Four Way Rollers				
6	152	**S600693-1**	**S600692-1**	**S600533-1**
12	305	**S600693-2**	**S600692-2**	**S600533-2**
18	457	**S600693-3**	**S600692-3**	**S600533-3**
22	559	**S600693-4**	**S600692-4**	**S600533-4**
28	711	**S600693-5**	**S600692-5**	**S600533-5**
Series 30000 - Three Way Rollers				
6	152	**S602132-1**	**S602133-1**	
12	305	**S602132-2**	**S602133-2**	
18	457	**S602132-3**	**S602133-3**	
22	559	**S602132-4**	**S602133-4**	
28	711	**S602132-5**	**S602133-5**	

Bottom wind and top wind may be used with all models except bevel crank. Multi position may not be used on models with a chain guard or Series 37000 reels.

Prop 65: ⚠ WARNING:
Cancer and Reproductive Harm - www.P65Warnings.ca.gov.

Rewind Motors

Part No.	Specification
Electric Motors	
S260409	Reversible type, 12 V DC 1/3 HP
260450	Reversible type, 24 V DC 1/4 HP
Explosion Proof Electric Motors	
S260430	Reversible type, single phase, explosion proof, Class 1 Group D Division 1, 115 V AC 0.40 HP.
S260626	24 V DC 2/3 HP. Electric motor reversible type. Explosion proof.
S260583	12 V DC 2/3 HP. Electric motor reversible type. Explosion proof.
Air Motors	
260428	4 AM delivers up to 1 1/2 HP, 1/4" NPTF (F) inlet
260429	6 AM delivers up to 4 HP, 1/2" NPTF (F) inlet
Hydraulic Motor	
370066	1021 RPM, 668 lb-in, 2400 psi, 2.2 in^3 intermittent 1800 psi continuous

Additional Accessories

Part No.	Specification	Use with Motor
Control Valves		
260454	Pneumatic on/off flow control valve assembly, 1/4" NPTF (F) inlet for 4 AM compressed air motors. Recommend using a filter, regulator, and lubricator with compressed air motors.	260428
260455	Same as above with 3/8" NPTF (F) inlet and outlet for 6 AM motors.	260429
Circuit Breaker		
S260422	40 AMP, manual reset button must be pressed firmly to reset	S260409 260450
Starting Solenoid		
S260426	12 V DC for activation of motor	S260409 S260583
370018	24 V DC for activation of motor	260450 S260626
Mounting Bracket		
260532	Combination for circuit breaker, solenoid and starting switch	

Operating Switches and Accessories

Part No.	Specification	Use with Motor
Push Button Switch		
S600870	115/230 V AC, 10 AMP fuse	S260430
600811	12/24 V DC, up to 1/3 HP, breaker and relay	S260409 260450
S600808	600811 switch with bracket, 12/24 V DC	S260409 260450
600869	12/24 V DC, up to 2/3 HP	S260626 S260583
260424	Momentary contact with rubber cap, 12/24 V DC, non-explosion proof	Any DC motor
260425	Momentary contact, class 1 group D, 115/230 V AC. May also be used with solenoid for 12 or 24 V DC.	Any explosion proof motor
Speed Control Switch		
600871	115/230 V AC, 10 AMP	S260430
600866	12/24 V DC	Any DC motor
Push Button Switch with Speed Control		
S600872	115/230 V AC, 10 AMP fuse, adjustable speed control	S260430
600873	115/230 V AC, 10 AMP fuse, forward/reverse adjustable speed control	S260430
600867	DC, 25 AMP, up to 1/3 HP	S260409
600868	DC, 40 AMP circuit breaker, up to 2/3 HP	S260583
Junction Box		
370200	For explosion proof motor	Any explosion proof motor
Chain Shrouds		
S600518	Optional chain shroud for Series 30000 and Series 1200 reels.	
S261746	Optional chain shroud for Series 2400, 3700, and 3900 reels.	

***Reference reelcraft.com for detailed specifications.**

Prop 65: ⚠ WARNING:
Cancer and Reproductive Harm - www.P65Warnings.ca.gov.

Customer Service: 1.855.634.9109
All Other Calls: 1.800.444.3134

Reelcraft's Online Interactive Catalog

Complete Online Catalog of Products

Reelcraft's interactive catalog gives users the ability to self-select the product they need for their specific application. The products are grouped into categories by application such as air, water, oil, grease, fuel, and welding. Each individual category of products gives the user the choice to narrow their search by filters such as hose/cord length, drive type, reel grade, in stock items, etc. The individual product pages include all the available information for each product including:

- Product specifications and dimensions
- Service manuals
- Tech bulletins
- Videos
- Available inventory
- CAD drawings
- FAQs
- Quote request form
- Available parts and accessories
- 360° images



Easy to use!

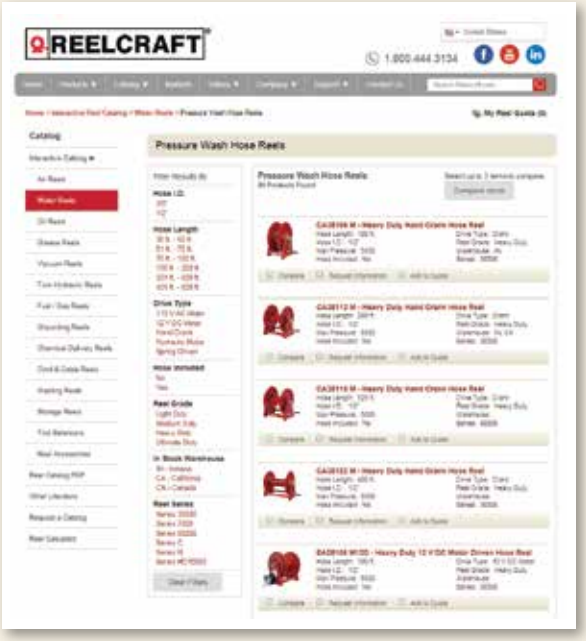

Parts and Accessories

The interactive catalog also contains an extensive listing of parts and accessories. Search the catalog of over 200 hose assemblies by hose I.D., length, pressure rating, or end fitting size. The catalog also contains information for the following items:

- Replacement hose assemblies
- Inlet hose assemblies
- Bumper stop assemblies
- Roller guide assemblies
- Swing brackets
- Pivot bases
- Swivel assemblies

Visit **www.reelcraft.com/catalog** to start your search!

Custom Capabilities

Don't see what you need? Reelcraft's engineered products group custom builds to your specifications.

- Very few size and weight constraints
- Special finishes / paint options
- Various drive types
- Wide range of pressures
- No minimum quantities

North America and Corporate Headquarters

2842 E. Business Hwy 30
Columbia City, IN 46725
Customer Service: 855-634-9109
Ph: 800-444-3134 • Fax: 800-444-4587
Ph: 260-248-8188 • Fax: 260-248-2605
reelcraft@reelcraft.com
www.reelcraft.com

Latin America and the Middle East

Thompson International, Inc.
P.O. Box 12958, Ft. Wayne, IN 46866
Ph: 260-489-1685 • Fax: 260-489-0203
info@t-i-i.com
www.reelcraft.com/latinamerica

Pacific Rim

P.O. Box 53776, Clark Freeport Zone
Philippines 2023
Ph: +63 (45) 625-6624
Fax: +63 (45) 321-0643
rap@comclark.com
www.reelcraft.com/asia

Europe

Unit 17 • Cronin Courtyard
Weldon South Industrial Estate
Corby • Northamptonshire NN18 8AG
United Kingdom
Ph: +44 (0) 1536 406999
Fax: +44 (0) 1536 406777
europe@reelcraft.com
www.reelcraft.com/europe

China

Reelcraft Changzhou Co., Ltd.
Building C, No. 229 HeHai West Road
Changzhou, Jiangsu, China 213022
Ph: +86 (519) 8512 2391 ext. 8002
Fax: +86 (519) 8512 9309
rco@reelcraftchina.com
www.reelcraftchina.com

Australia

PO Box 6463 BC, Blacktown
NSW 2148, Australia
Ph: +61 (2) 9621 8988
Fax: +61 (2) 9621 7688
sales@recoila.com
www.reelcraft.com

Form # **917-1097** 3/2018

reelcraft.com

REELCRAFT®