BALDOR • RELIANCE

Customer information packet

FPM2514T

20//15HP, 3460//2900RPM, 3PH, 60//50HZ, 254T
Class - None
Division - Not Applicable

Copyright © All product information within this document is subject to ABB Motors and Mechanical Inc. copyright © protection, unless otherwise noted.
2/16/2025 10:39:49 PM

Specifications

Enclosure	OPSB
Frame	254T
Frame Material	Steel
Frequency	50.00 Hz
	60.00 Hz
Haz Area Class and Group	None
Haz Area Division	Not Applicable
Motor Letter Type	Three Phase
Output @ Frequency	15.000 HP @ 50 HZ
	20.000 HP @ 60 HZ
Phase	3
Synchronous Speed @ Frequency	3600 RPM @ 60 HZ
Voltage @ Frequency	380.0 V @ 50 HZ
	230.0 V @ 60 HZ
	190.0 V @ 50 HZ
	460.0 V @ 60 HZ
Agency Approvals	CSA EEV
	CSA
	UL
	UR
Ambient Temperature	40 °C
Auxillary Box	No Auxillary Box
Auxillary Box Lead Termination	None
Base Indicator	Rigid
Bearing Grease Type	Polyrex EM (-20F +300F)
Blower	None
Current @ Voltage	42.000 A @ 190.0 V
	46.000 A @ 230.0 V
	23.000 A @ 460.0 V
	21.000 A @ 380.0 V
Design Code	B
Drip Cover	No Drip Cover

Part detail

Revision	K
Type	AC
Mech. spec.	37N756
Base	
Status	PRD/A
Elec. spec.	37WGR893
Layout	37LYN756
Eff. date	06-08-2023
CD Diagram	CD0104
Poles	02
Leads	12#12
Proprietary	False
Created date	09-23-2015

Duty Rating	CONT
Efficiency @ 100% Load	90.2 %
Electrically Isolated Bearing	Not Electrically Isolated
Feedback Device	NO FEEDBACK
Front Face Code	Standard
Front Shaft Indicator	None
Heater Indicator	No Heater
High Voltage Full Load Amps	21.0 a
Insulation Class	F
Inverter Code	Inverter Ready
KVA Code	G
Lifting Lugs	Standard Lifting Lugs
Locked Bearing Indicator	No Locked Bearing
Motor Lead Exit	Ko Box
Motor Lead Quantity/Wire Size	12 @ 12 AWG
Motor Lead Termination	Flying Leads
Motor Standards	NEMA
Motor Type	3742M
Mounting Arrangement	F1
Number of Poles	2
Overall Length	22.25 IN
Power Factor	90
Product Family	General Purpose
Pulley End Bearing Type	Ball
Pulley Face Code	Standard
Pulley Shaft Indicator	Standard
Rodent Screen	None
RoHS Status	ROHS COMPLIANT
Service Factor	1.15
Shaft Diameter	1.625 IN
Shaft Extension Location	Pulley End
Shaft Ground Indicator	No Shaft Grounding
Shaft Rotation	Reversible
Shaft Slinger Indicator	No Slinger

Speed	2860 rpm
	3450 rpm
Speed Code	Single Speed
Starting Method	Wye Start - Delta Run
Thermal Device - Bearing	None
Thermal Device - Winding	None
Vibration Sensor Indicator	No Vibration Sensor
Winding Thermal 1	None
Winding Thermal 2	None

Nameplate

NP3454L												
CAT.NO.	FPM2514T			**CUST P/N**				**I.P.**	23			
SPEC.	37N756R893H2			**SER.NO.**				**FRAME**	254T			
HZ	60	**HP**	20	**RPM**	3450	**HZ**	50	**HP**	15	**RPM**	2860	
VOLTS	230/460			**CODE**	G	**VOLTS**	190/380			**CODE**	G	
AMPS	46/23			**DES**	B	**AMPS**	42/21			**DES**	B	
EFF	90.2	**SER.F.**	1.15	**PF**	90	**EFF**	89.5	**SER.F.**	1.15	**PF**	90	
RATING	40C AMB-CONT			**DE BRG**	6309			**GREASE**	POLYREX EM			
BLANK				**ODE BRG**	6206			**MTR. WT.**	145			
				CLASS	F	**PH**	3					
				ENCL	OPSB	**CC**	010A					
HTR-VOLTS		**HTR-AMPS**		**HTR-WATTS**								

AC Induction Motor Performance Data
Record # 54579
Typical performance - not guaranteed values

Winding: 37WGR893-R001	**Type:** 3742M	**Enclosure:** OPSB

Nameplate Data				**460 V, 60 Hz: High Voltage Connection**	
Rated Output (HP)			20//15	**Full Load Torque**	30.3 LB-FT
Volts			230/460//190/380	**Start Configuration**	direct on line
Full Load Amps			46/23//42/21	**Breakdown Torque**	89.4 LB-FT
R.P.M.			3450//2860	**Pull-up Torque**	45.9 LB-FT
Hz	60//50	**Phase**	3	**Locked-rotor Torque**	51.7 LB-FT
NEMA Design Code	B	**KVA Code**	G	**Starting Current**	137 A
Service Factor (S.F.)			1.15	**No-load Current**	5.92 A
NEMA Nom. Eff.	90.2	**Power Factor**	90	**Line-line Res. @ 25ºC**	0.53993 Ω
Rating - Duty			40C AMB-CONT	**Temp. Rise @ Rated Load**	67°C
S.F. Amps				**Temp. Rise @ S.F. Load**	89°C

Load Characteristics 460 V, 60 Hz, 20 HP

% of Rated Load	**25**	**50**	**75**	**100**	**125**	**150**	**S.F.**
Power Factor	65	83	88	90	91	90	91
Efficiency	91.9	93	92	90.4	88.2	85.7	89.1
Speed	3565	3528.9	3490.7	3447.9	3395.3	3337.8	3416
Line amperes	8.05	12.3	17.3	22.9	29.3	36.4	26.7

ABB Motors and Mechanical Inc.

WINDING # 37WGR893

20 HP 3 PH 60 HZ 3447.9 RPM 460 V 3742M

Typical performance - not guaranteed values.

TORQUES(LB-FT): PO=89.4 PU=45.9 LR=51.7 LRA=137

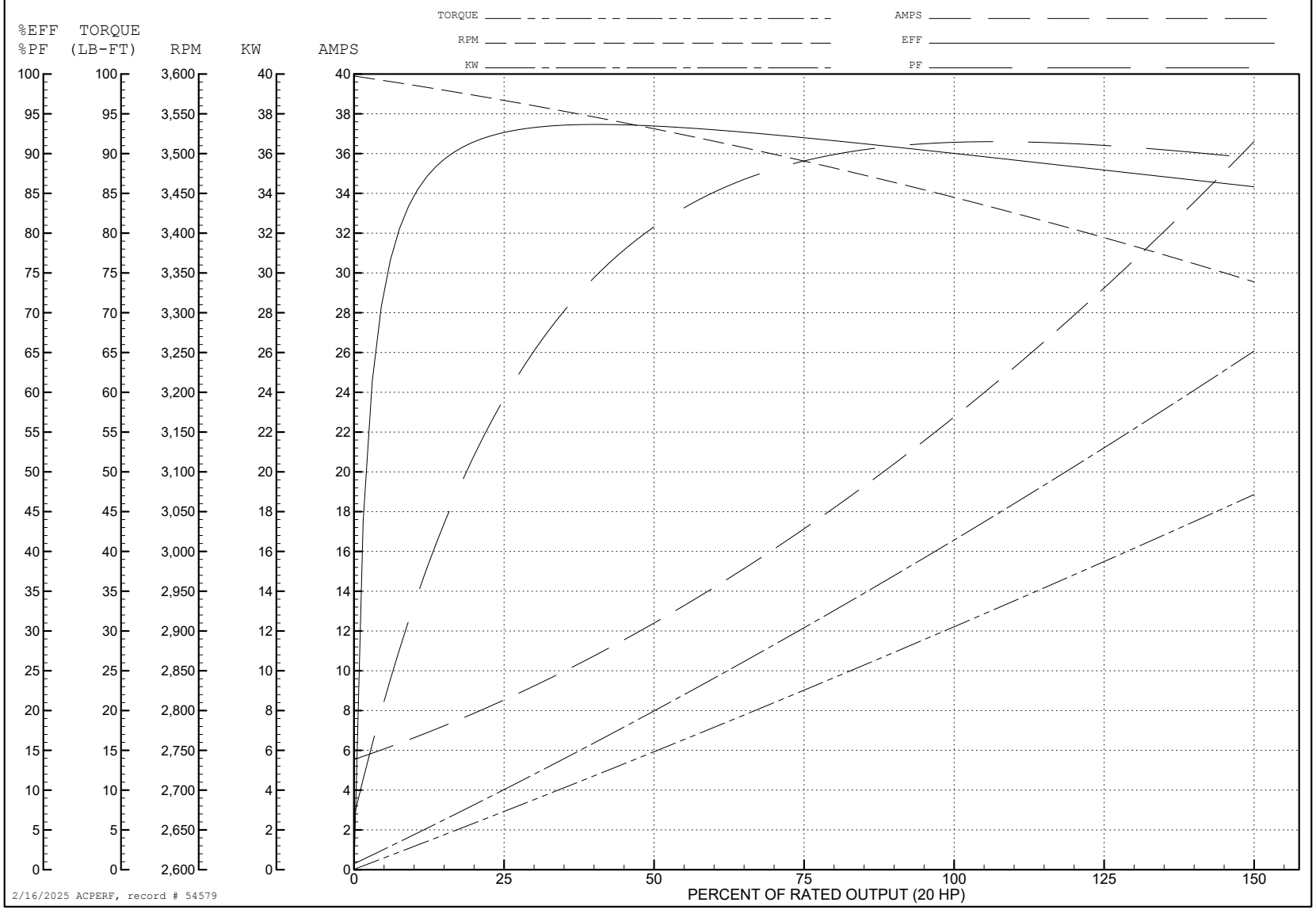

AC Induction Motor Performance Data
Record # 54580
Typical performance - not guaranteed values

Winding: 37WGR893-R001	**Type:** 3742M	**Enclosure:** OPSB

Nameplate Data				**380 V, 50 Hz: High Voltage Connection**	
Rated Output (HP)			20//15	**Full Load Torque**	27.5 LB-FT
Volts			230/460//190/380	**Start Configuration**	direct on line
Full Load Amps			46/23//42/21	**Breakdown Torque**	86.8 LB-FT
R.P.M.			3450//2860	**Pull-up Torque**	43.4 LB-FT
Hz	60//50	**Phase**	3	**Locked-rotor Torque**	53.1 LB-FT
NEMA Design Code	B	**KVA Code**	G	**Starting Current**	138 A
Service Factor (S.F.)			1.15	**No-load Current**	5.84 A
NEMA Nom. Eff.	90.2	**Power Factor**	90	**Line-line Res. @ 25ºC**	0.53993 Ω
Rating - Duty			40C AMB-CONT	**Temp. Rise @ Rated Load**	60°C
S.F. Amps				**Temp. Rise @ S.F. Load**	79°C

Load Characteristics 380 V, 50 Hz, 15 HP

% of Rated Load	**25**	**50**	**75**	**100**	**125**	**150**	**S.F.**
Power Factor	63	82	88	90	91	90	91
Efficiency	91.7	92.8	91.8	90.1	88	85.5	88.8
Speed	2969.1	2938.6	2904.4	2866.5	2823	2775.5	2840
Line amperes	7.67	11.4	16	20.9	26.7	32.9	24.4

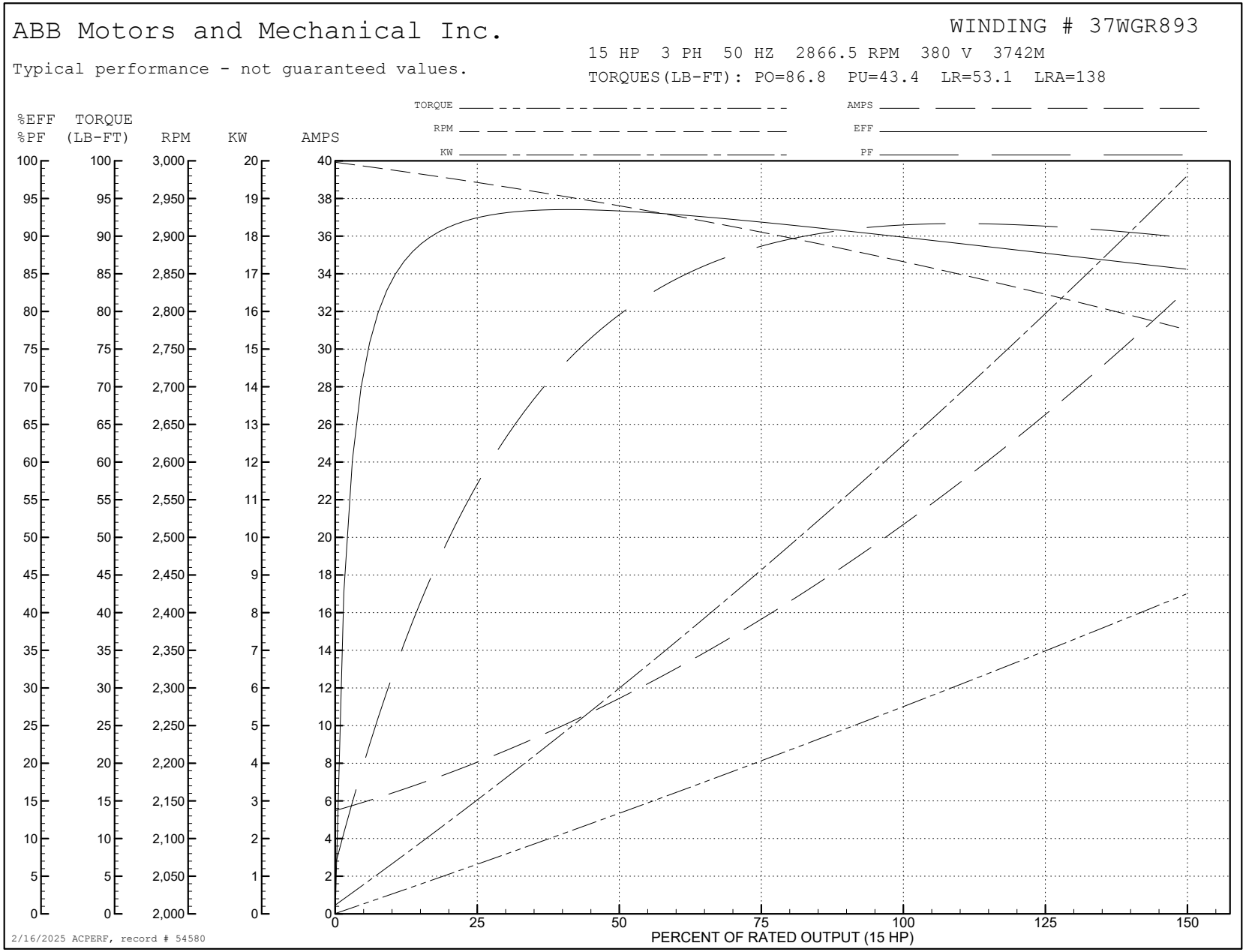
ABB Motors and Mechanical Inc.
WINDING # 37WGR893
15 HP 3 PH 50 HZ 2866.5 RPM 380 V 3742M
Typical performance - not guaranteed values.
TORQUES(LB-FT): PO=86.8 PU=43.4 LR=53.1 LRA=138
TORQUE
RPM
KW
AMPS
EFF
PF
%EFF %PF
TORQUE (LB-FT)
RPM
KW
AMPS
PERCENT OF RATED OUTPUT (15 HP)
2/16/2025 ACPERF, record # 54580

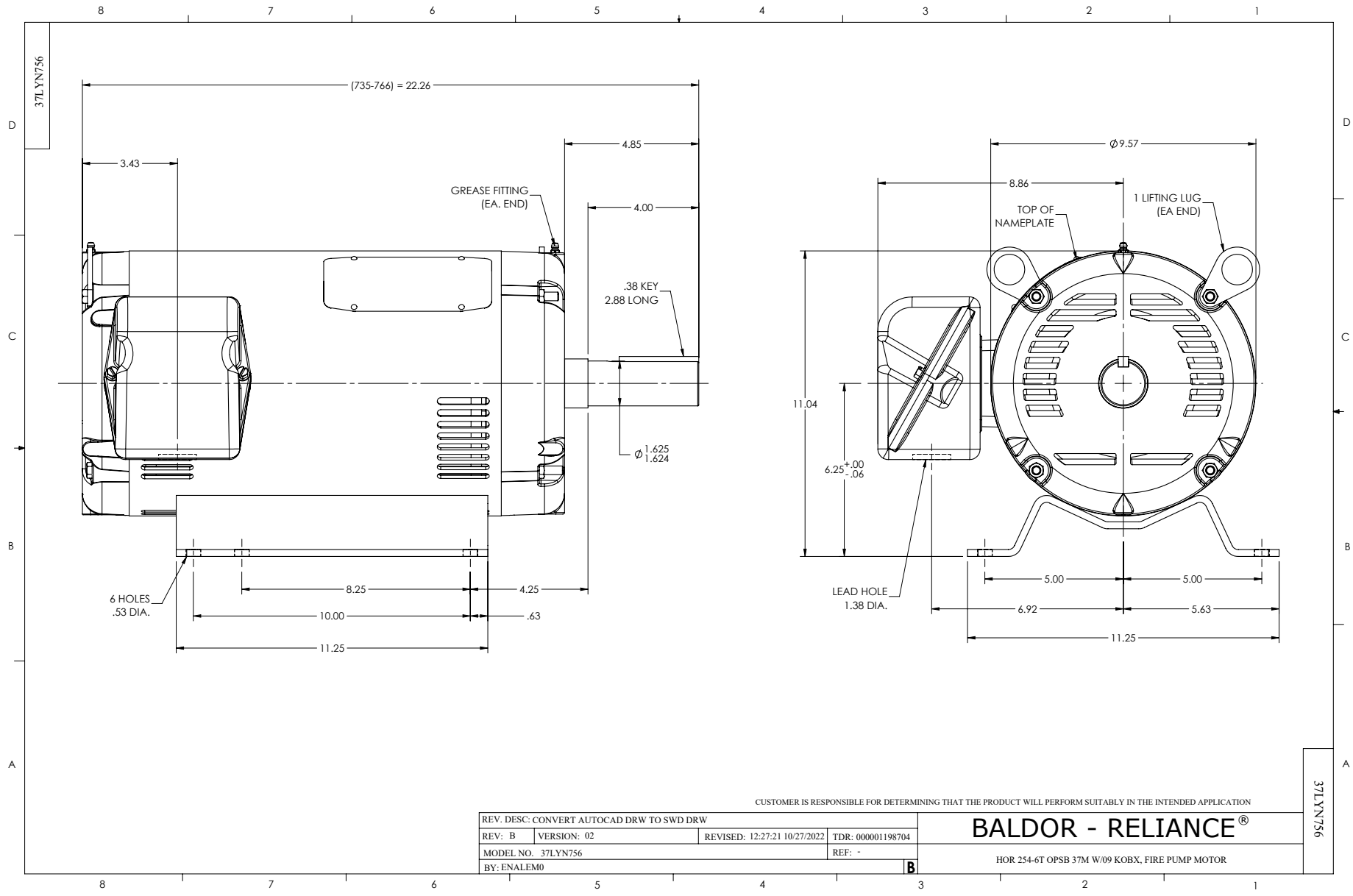
37LYN756
(735-766) = 22.26
3.43
4.85
4.00
GREASE FITTING
(EA. END)
.38 KEY
2.88 LONG
Ø1.625
1.624
6 HOLES
.53 DIA.
8.25
4.25
10.00
.63
11.25
Ø9.57
8.86
TOP OF
NAMEPLATE
1 LIFTING LUG
(EA END)
11.04
6.25 +.00 -.06
LEAD HOLE
1.38 DIA.
5.00
5.00
6.92
5.63
11.25
CUSTOMER IS RESPONSIBLE FOR DETERMINING THAT THE PRODUCT WILL PERFORM SUITABLY IN THE INTENDED APPLICATION
REV. DESC: CONVERT AUTOCAD DRW TO SWD DRW
REV: B
VERSION: 02
REVISED: 12:27:21 10/27/2022
TDR: 000001198704
MODEL NO. 37LYN756
REF: -
BY: ENALEM0
B
BALDOR - RELIANCE®
HOR 254-6T OPSB 37M W/09 KOBX, FIRE PUMP MOTOR
37LYN756

CD0104

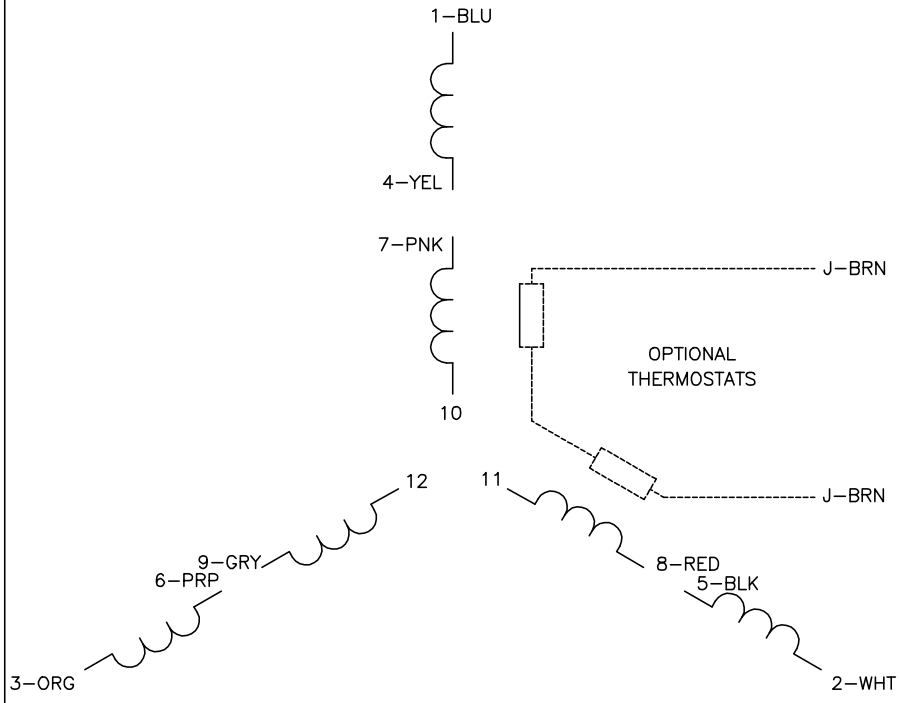

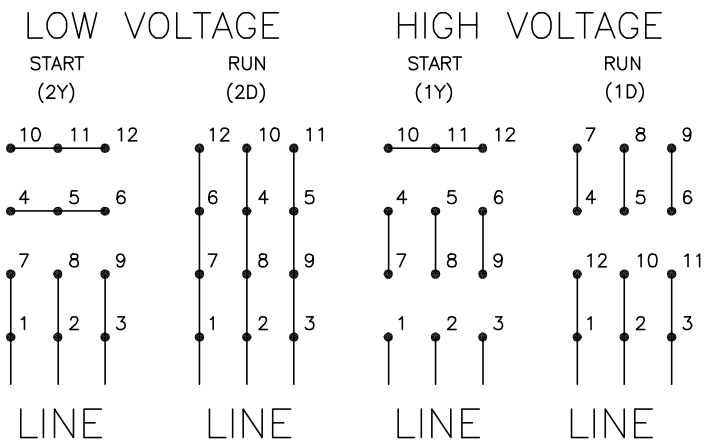

NOTES:

1. INTERCHANGE ANY TWO LINE LEADS TO REVERSE ROTATION.
2. OPTIONAL THERMOSTATS ARE PROVIDED WHEN SPECIFIED.
3. ACTUAL NUMBER OF INTERNAL PARALLEL CIRCUITS MAY BE A MULTIPLE OF THOSE SHOWN ABOVE.
4. LEAD COLORS ARE OPTIONAL. LEADS MUST ALWAYS BE NUMBERED AS SHOWN.

CD0104

REV. DESC: ADD CLASS CONN00000007		
REV. LTR: D	VERSION: 01	TDR: 000001099922
FILE: \AAA\00008\377	REVISED: 09:02:55 02/19/2019	BY: ENBRIR0
MTL: –		

BALDOR - RELIANCE®

3PH, DV, 12 LEADS, Y START/D RUN

SH 1 of 1