BALDOR • RELIANCE

Customer information packet

FPM2563TS-4

200/150HP, 60//50HZ, 4PL, 3PH, 445TS, OPEN
Class - None
Division - Not Applicable

Copyright © All product information within this document is subject to ABB Motors and Mechanical Inc. copyright © protection, unless otherwise noted.
2/16/2025 10:41:58 PM

Specifications

Enclosure	DP
Frame	445TS
Frame Material	Iron
Frequency	50.00 Hz
	60.00 Hz
Haz Area Class and Group	None
Haz Area Division	Not Applicable
Motor Letter Type	Three Phase
Output @ Frequency	200.000 HP @ 60 HZ
	150.000 HP @ 50 HZ
Phase	3
Synchronous Speed @ Frequency	1800 RPM @ 60 HZ
Voltage @ Frequency	380.0 V @ 50 HZ
	460.0 V @ 60 HZ
Agency Approvals	CSA EEV
	CCSA US
	UL
Ambient Temperature	40 °C
Auxillary Box	No Auxillary Box
Base Indicator	Rigid
Bearing Grease Type	Polyrex EM (-20F +300F)
Current @ Voltage	205.000 A @ 380.0 V
	224.000 A @ 460.0 V
Design Code	B
Drip Cover	No Drip Cover
Duty Rating	CONT
Efficiency @ 100% Load	95.0 %
Feedback Device	NO FEEDBACK
Heater Indicator	No Heater
High Voltage Full Load Amps	205.0 a
Insulation Class	B
Inverter Code	Not Inverter

Part detail

Revision	F
Type	AC
Mech. spec.	
Base	
Status	PRD/A
Elec. spec.	A44WG5465
Layout	617428-044
Eff. date	02-01-2017
CD Diagram	421948-079
Poles	04
Leads	12#6
Proprietary	False
Created date	09-17-2015

KVA Code	F
Lifting Lugs	No Lifting Lugs
Motor Lead Quantity/Wire Size	12 @ 6 AWG
Motor Standards	NEMA
Motor Type	A44060M
Mounting Arrangement	F1
Number of Poles	4
Overall Length	35.88 IN
Power Factor	88
Product Family	Other
Pulley End Bearing Type	Ball
Pulley Face Code	Standard
Service Factor	1.15
Shaft Ground Indicator	No Shaft Grounding
Shaft Rotation	Reversible
Shaft Slinger Indicator	No Slinger
Speed	1480 rpm
	1780 rpm
Speed Code	Single Speed
Starting Method	Wye Start - Delta Run
Thermal Device - Bearing	None
Thermal Device - Winding	None

Nameplate

NP3488L															
CAT.NO.	FPM2563TS-4			**CUST P/N**				**I.P.**							
SPEC.	P44G1852			**SER.NO.**				**FRAME**	445TS						
HZ	60	**HP**	200	**RPM**	1780	**HZ**	50	**HP**	150	**RPM**	1480				
VOLTS	460			**CODE**	F	**VOLTS**	380			**CODE**	G				
AMPS	224			**DES**	B	**AMPS**	205			**DES**	B				
EFF	95	**SER.F.**	1.15	**PF**	88	**EFF**	94.8	**SER.F.**	1.15	**PF**	87				
RATING	40C AMB-CONT			**DE BRG**	65BC03J30X	**GREASE**	POLYREX EM								
BLANK				**ODE BRG**	65BC03J30X	**MTR. WT.**	1718								
				CLASS	F	**PH**	3								
				ENCL	DP	**CC**	010A								
HTR-VOLTS		**HTR-AMPS**		**HTR-WATTS**		**MAX. SPACE HEATER TEMP.**									

617428-044

DUTY MASTER ALTERNATING CURRENT MOTORS

SQUIRREL-CAGE INDUCTION
CAST IRON CONSTRUCTION

ENCLOSURE: PROTECTED
MOUNTING: FOOT

FRAMES 444TS-445TS

COOLING: SELF-VENTILATED

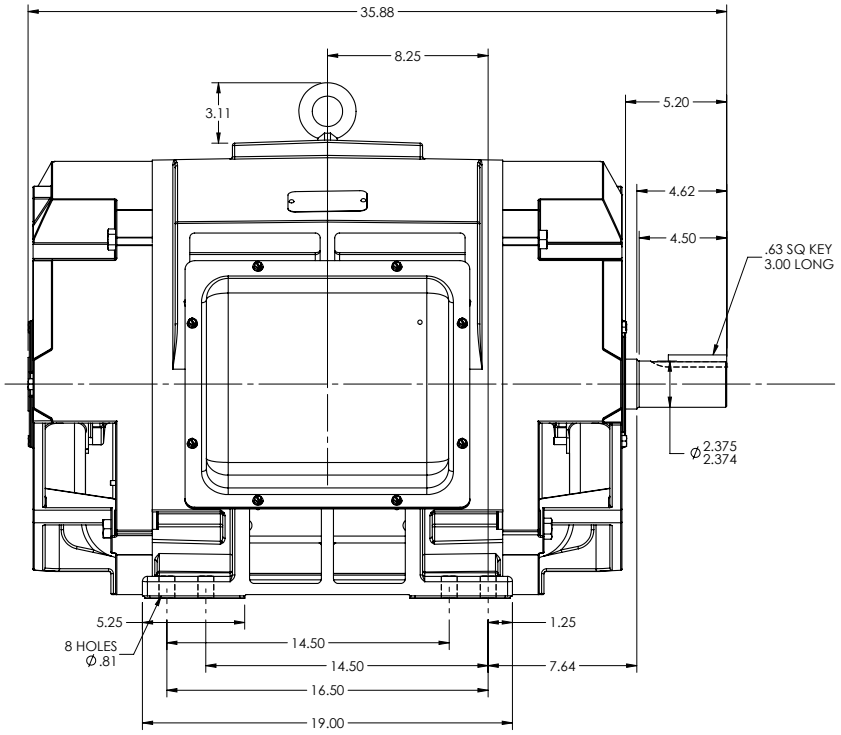

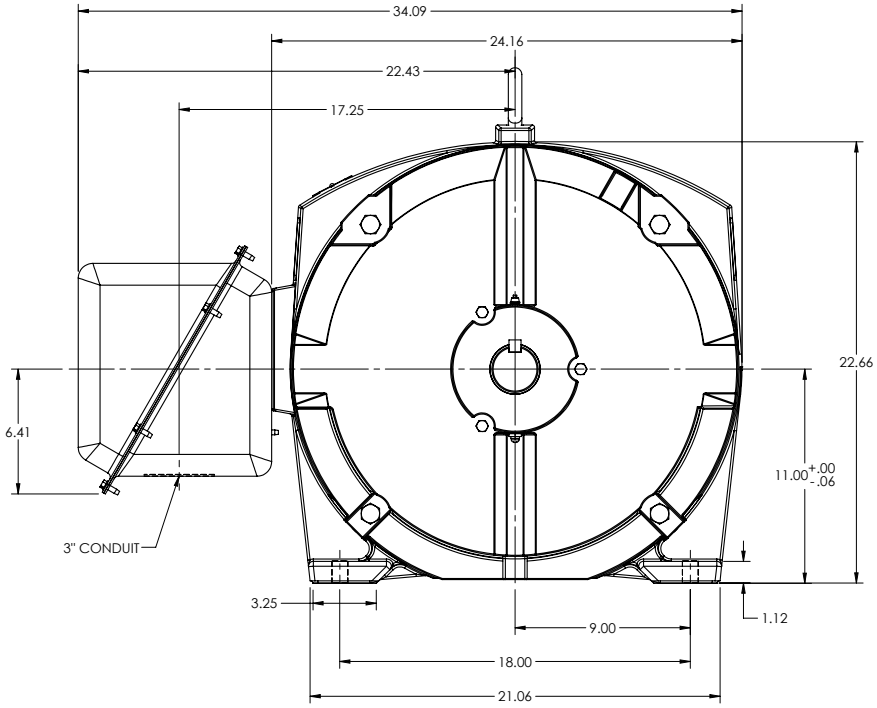

MAXIMUM PERMISSIBLE SHAFT RUNOUT WHEN MEASURED AT END OF STD. SHAFT EXTENSION IS .002 T.I.R. UP TO AND INCLUDING 1.625 DIA. AND .003 T.I.R. 1.625 DIA. TO 5 INCH DIA.

WEIGHT (LBS): 444TS = 1710
445TS = 1750
MOTOR WEIGHTS MAY VARY BY 15% DEPENDING UPON RATING.

CUSTOMER IS RESPONSIBLE FOR DETERMINING THAT BALDOR'S PRODUCT WILL PERFORM SUITABLY IN THE INTENDED APPLICATION

REV. DESC: CONDUIT WAS NPT			
REV: A	VERSION: 01	REVISED: 08:20:28 04/17/2018	TDR: 000001067288
MODEL NO. 617428-044			REF:
BY: RAGEC			B

BALDOR

DIM SHEET HOR 444-445TS PROT SV FT

617428-044

421948–079

TOLERANCE UNLESS OTHERWISE SHOWN
ONE PLACE DECIMAL ±.1
TWO PLACE DECIMAL ±.02
THREE PLACE DECIMAL ±.003
ANGLE ±0°–30'
SURFACE FINISH 250

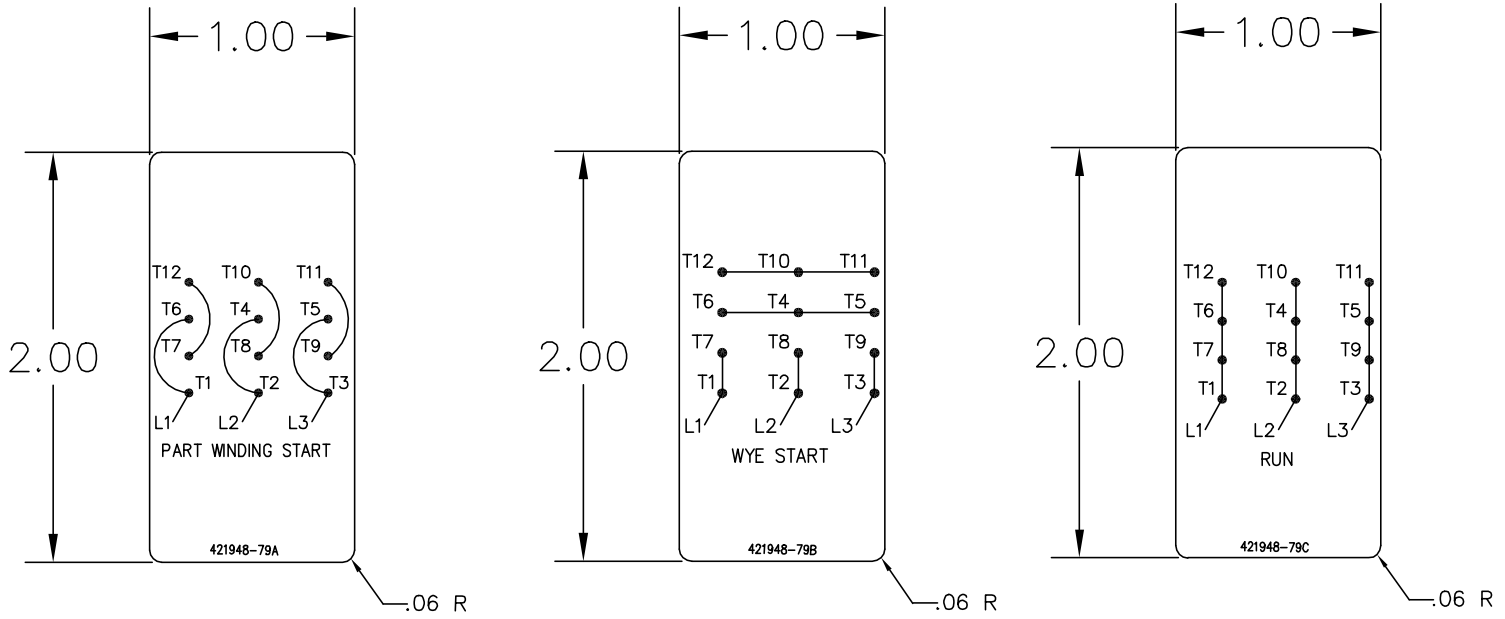

MATERIAL SPECIFICATION: .005 THICK DULL SILVER MYLAR, TOPCOAT–ARMORCOTE, PS ADHESIVE, LABEL MUST MEET THE REQUIREMENTS AS SPECIFIED IN CANADIAN STANDARDS ASSOCIATION: "CSA TESTING LABORATORIES TEST PROGRAM FOR ADHESIVE TYPE NAMEPLATES".
LETTERING: UNIVERSAL TYPE UNLESS OTHERWISE SPECIFIED.
COLORS: 1) BLACK ON NATURAL BACKGROUND

REF: 410961–66A

–	1	421948–79C	RUN CONNECTION
–	1	421948–79B	WYE START
–	1	421948–79A	PART WINDING START
–	R	PART	DESCRIPTION

GROUP GROUP

421948–079

REV. DESC: UPDATE DRAWING TO REFLECT CORRECT REVISION LETTER		
REV. LTR: C	VERSION: 03	TDR: 000001225403
FILE: \RAG\00013\521	REVISED: 09:01:40 02/07/2024	BY: USBRSPI
MTL: –		

BALDOR - RELIANCE®

MYLAR 12 LEAD PWS OR WYE–DELTA WIRING DIAGRAM

SH 1 of 1