









HPS Centurion® R
Reactors

power to perform

Hammond Power Solutions

HPS Centurion® R
Line Reactor

HPS Centurion® R Reactor

The new HPS Centurion® R reactor provides a unique blend of improved performance and reliability while reducing the product footprint. HPS Centurion® R reactors deliver protection for your motors and AC drives, while minimizing power system harmonics. They are available in standard ratings from 0.5 HP (373 Watts) to 1000 HP (746 kilowatts), up to 690 V and are fully compliant with UL, CSA, CE, IEC, and NEMA standards.

The efficient and cost effective HPS Centurion® R reactors are built to satisfy the power quality needs of demanding AC drive applications.



Why Choose a Reactor?

HPS reactors are designed to address line-side issues associated with variable frequency drives. They attenuate voltage and current transients that can cause nuisance tripping of a drive. Reactors also minimize harmonic current levels within the drive supply circuit. When used on the output side of IGBT-based, PWM-type AC drives, HPS reactors reduce the motor operating temperature and audible noise by moderating line transients seen by the motor. The use of HPS reactors enhances the overall system performance, life expectancy, and efficiency of the motor.

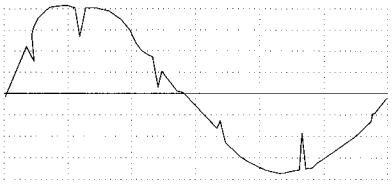

Voltage waveform illustrating line notching caused by the DC rectifier in typical AC drives

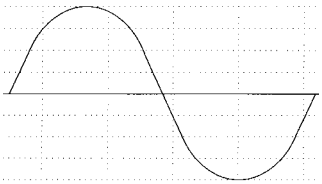

Ideal sine wave from the utility supply

Connection Diagram

(a) single motor

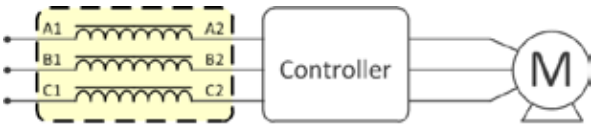

(b) multiple motors

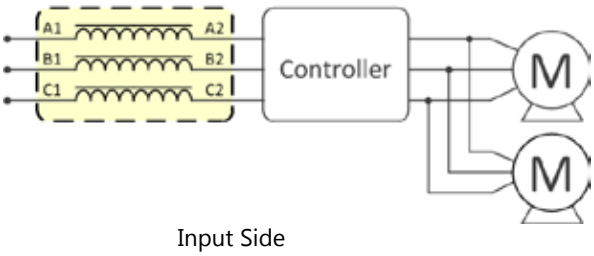

Input Side

(a) single motor

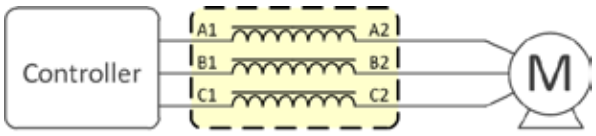

(b) multiple motors

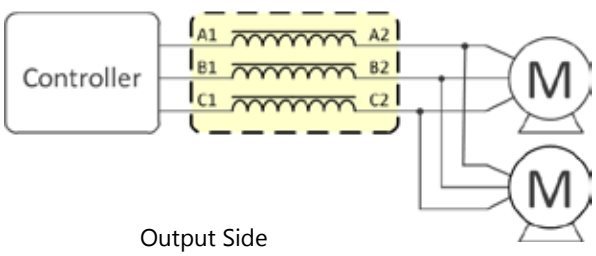

Output Side

Hammond Power Solutions

CONSTRUCTION

Assembly

- The impedance of the reactors is accurately controlled bymaintaining the core gaps in the flux path.
- In some HP ranges, bobbins are used to provide exceptional mechanical strength and increase the product reliability.
- Every reactor is vacuum pressure impregnated (VPI) with VT (vinyl-toluene) Polyester Resin to minimize audible noise.

Terminations

- Finger-proof terminal blocks are provided on rated currents of approximately below 65 Amps.
- Terminal pads are supplied on approximately 65 Amps and above.
  - Terminal pads are brazed to ensure electrical integrity.

Mounting

- Core and Coil: Floor mounting available on all units. Wall and ceiling mounting available on units up to 200lbs.
- Enclosed: Floor mounting available on all units. Wall and ceiling mounting available on enclosure style N1, N2, CH2 and CH4 only.

Enclosures

- Type 1 standard (3R available; consult HPS for availability of enclosed units)
- Rugged steel enclosures with UL50 ANSI 61 grey paint
- Enclosure Kits are available separately allowing assembly in an approved facility.

Specials

- For special applications or for any features that you may require beyond the standard line listed, please contact our sales office.

SPECIFICATIONS

Power Rating:	0.5 to 1250 HP (0.37 - 932 kW)
Impedance Rating:	1.5%, 3% and 5%
System Frequency:	50/60 Hertz*
System Voltage Ratings:	120 V, 208 V, 240 V, 480 V, 600 V and 690 V (de-rated) at 60 Hz 380 V, 525 V and 690 V at 50 Hz
Altitude (de-rating):	Comply with NEMA ST20
Inductance Tolerance:	+15/-10%
Inductance Curve:	% Nominal Inductance / % Rated Current 100 / 100 95 / 110 80 / 150 50 / 200
Dielectric strength to ground:	4000 volts for 1 minute or equivalent
Cooling Method:	Natural convection
Insulation System:	- 70ºC rise over average 50°C ambient for 130ºC Temperature Class with Temperature Insulation Class up to 40A - 115ºC rise over average 50°C ambient for 180ºC and 220ºC Temperature Classes with Temperature Insulation Classes on units larger than 40A
Warranty:	10 year limited warranty

* Impedance levels are for 60 Hz operation

specifications subject to change

BENEFITS

- Mitigate nuisance tripping
- Extend the life of switching components and motors
- Reduce audible motor noise and motor operating temperature
- Mitigate the effect of long lead length
- Minimize harmonic distortion
- Reduce line notching

APPLICATIONS


Oil & Gas


Irrigation Fields


Wastewater


Food Processing


HVAC


Pharmaceutical


Steel


Pulp & Paper


Automotive

COMPLIANCE & APPROVALS

HPS Centurion® R is certified to the following standards:

- UL 508
- CSA C9
- CSA C22.2 No. 47 standards
- CE Mark (IEC 61558-2-20:2000)
- UL Listed (up to 600 V), file No. E61431
- CSA Certified file No. LR3902
- IEC 61558-2-20

HPS Centurion® R
Line Reactor

HPS Centurion® R Features

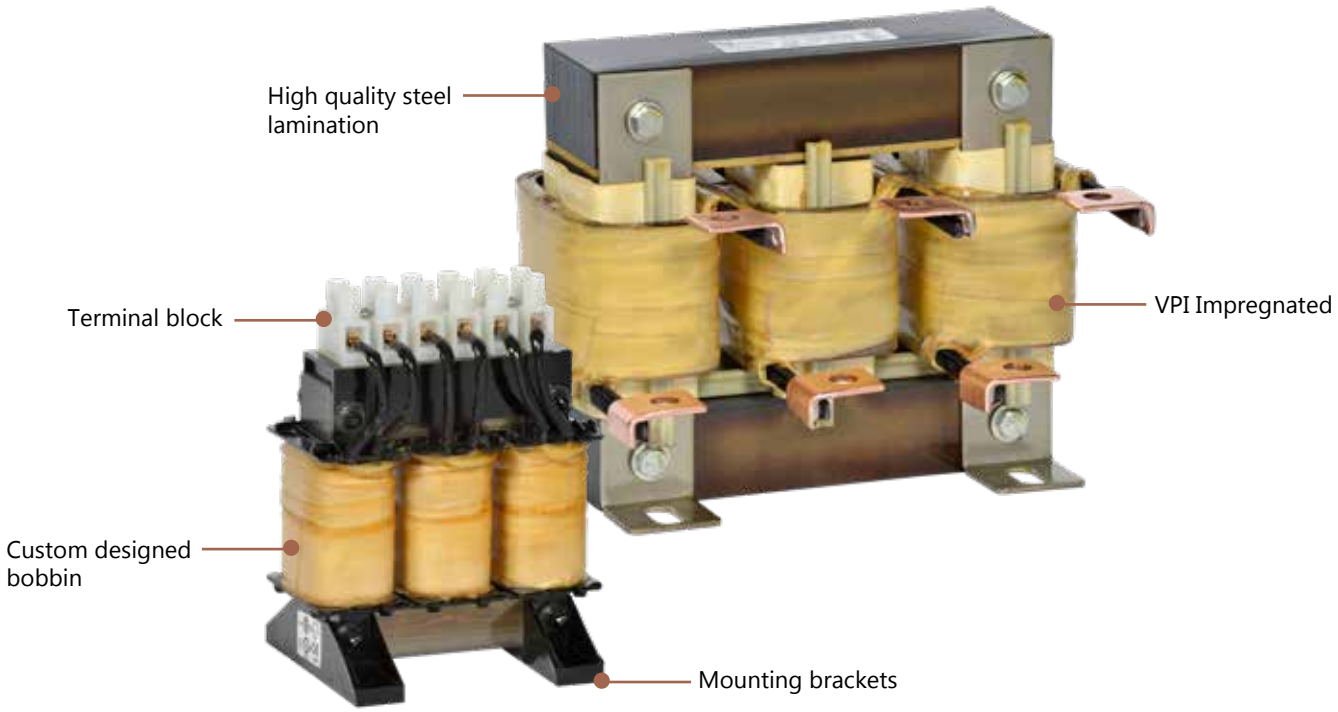

HPS Centurion® R Part Number Guide

C	R	X	1	2	3	4	A	E

Open or Enclosed
C for Core & Coil
E for Enclosed

Relative Impedance

Rated Current
D for Decimal
i.e. 02D4 is 2.4

Product Line

SELECTION TABLES

HP Rating	208 Volt - 60Hz					
	3% Impedance*			5% Impedance*		
	Amps	Core & Coil Part Num.	Enclosed Part Num.	Amps	Core & Coil Part Num.	Enclosed Part Num.
0.5	2.4	CRX02D4BC	CRX02D4BE	2.4	CRX02D4DC	CRX02D4DE
0.75	3.5	CRX03D5AC	CRX03D5AE	3.5	CRX03D5DC	CRX03D5DE
1	4.6	CRX04D6BC	CRX04D6BE	4.6	CRX04D6CC	CRX04D6CE
1.5	6.6	CRX06D6BC	CRX06D6BE	6.6	CRX06D6CC	CRX06D6CE
2	7.5	CRX07D5AC	CRX07D5AE	7.5	CRX07D5DC	CRX07D5DE
3	10.7	CRX10D7BC	CRX10D7BE	10.7	CRX10D7DC	CRX10D7DE
5	16.7	CRX16D7BC	CRX16D7BE	16.7	CRX16D7DC	CRX16D7DE
7.5	24	CRX0024AC	CRX0024AE	24	CRX0024CC	CRX0024CE
10	31	CRX0031BC	CRX0031BE	31	CRX0031CC	CRX0031CE
15	46	CRX0046BC	CRX0046BE	46	CRX0046CC	CRX0046CE
20	59	CRX0059AC	CRX0059AE	59	CRX0059CC	CRX0059CE
25	75	CRX0075AC	CRX0075AE	75	CRX0075CC	CRX0075CE
30	88	CRX0088BC	CRX0088BE	88	CRX0088CC	CRX0088CE
40	114	CRX0114AC	CRX0114AE	114	CRX0114CC	CRX0114CE
50	143	CRX0143AC	CRX0143AE	143	CRX0143DC	CRX0143DE
60	170	CRX0170BC	CRX0170BE	170	CRX0170DC	CRX0170DE
75	211	CRX0211BC	CRX0211BE	211	CRX0211CC	CRX0211CE
100	273	CRX0273BC	CRX0273BE	273	CRX0273CC	CRX0273CE
125	343	CRX0343BC	CRX0343BE	343	CRX0343CC	CRX0343CE
150	396	CRX0396BC	CRX0396BE	396	CRX0396DC	CRX0396DE
200	528	CRX0528BC	CRX0528BE	528	CRX0528CC	CRX0528CE

HP Rating	240 Volt - 60Hz					
	3% Impedance*			5% Impedance*		
	Amps	Core & Coil Part Num.	Enclosed Part Num.	Amps	Core & Coil Part Num.	Enclosed Part Num.
0.5	2.4	CRX02D4AC	CRX02D4AE	2.4	CRX02D4CC	CRX02D4CE
0.75	3.5	CRX03D5BC	CRX03D5BE	3.5	CRX03D5CC	CRX03D5CE
1	4.6	CRX04D6AC	CRX04D6AE	4.6	CRX04D6DC	CRX04D6DE
1.5	6.6	CRX06D6AC	CRX06D6AE	6.6	CRX06D6DC	CRX06D6DE
2	7.5	CRX07D5BC	CRX07D5BE	7.5	CRX07D5CC	CRX07D5CE
3	10.7	CRX10D7AC	CRX10D7AE	10.7	CRX10D7CC	CRX10D7CE
5	16.7	CRX16D7AC	CRX16D7AE	16.7	CRX16D7CC	CRX16D7CE
7.5	24	CRX0024BC	CRX0024BE	24	CRX0024DC	CRX0024DE
10	31	CRX0031AC	CRX0031AE	31	CRX0031DC	CRX0031DE
15	46	CRX0046AC	CRX0046AE	46	CRX0046DC	CRX0046DE
20	59	CRX0059BC	CRX0059BE	59	CRX0059DC	CRX0059DE
25	75	CRX0075BC	CRX0075BE	75	CRX0075DC	CRX0075DE
30	88	CRX0088AC	CRX0088AE	88	CRX0088DC	CRX0088DE
40	114	CRX0114BC	CRX0114BE	114	CRX0114DC	CRX0114DE
50	143	CRX0143BC	CRX0143BE	143	CRX0143CC	CRX0143CE
60	170	CRX0170AC	CRX0170AE	170	CRX0170CC	CRX0170CE
75	211	CRX0211AC	CRX0211AE	211	CRX0211DC	CRX0211DE
100	273	CRX0273AC	CRX0273AE	273	CRX0273DC	CRX0273DE
125	343	CRX0343AC	CRX0343AE	343	CRX0343DC	CRX0343DE
150	396	CRX0396AC	CRX0396AE	396	CRX0396CC	CRX0396CE
200	528	CRX0528AC	CRX0528AE	528	CRX0528DC	CRX0528DE

HP Rating	480 Volt - 60Hz					
	3% Impedance*			5% Impedance*		
	Amps	Core & Coil Part Num.	Enclosed Part Num.	Amps	Core & Coil Part Num.	Enclosed Part Num.
0.5	1.1	CRX01D1AC	CRX01D1AE	1.1	CRX01D1BC	CRX01D1BE
0.75	1.6	CRX01D6AC	CRX01D6AE	1.6	CRX01D6BC	CRX01D6BE
1	2.1	CRX02D1AC	CRX02D1AE	2.1	CRX02D1BC	CRX02D1BE
1.5	3	CRX0003AC	CRX0003AE	3	CRX0003BC	CRX0003BE
2	3.4	CRX03D4AC	CRX03D4AE	3.4	CRX03D4BC	CRX03D4BE
3	4.8	CRX04D8AC	CRX04D8AE	4.8	CRX04D8BC	CRX04D8BE
5	7.6	CRX07D6AC	CRX07D6AE	7.6	CRX07D6BC	CRX07D6BE
7.5	11	CRX0011BC	CRX0011BE	11	CRX0011CC	CRX0011CE
10	14	CRX0014AC	CRX0014AE	14	CRX0014BC	CRX0014BE
15	21	CRX0021AC	CRX0021AE	21	CRX0021BC	CRX0021BE
20	27	CRX0027BC	CRX0027BE	27	CRX0027CC	CRX0027CE
25	34	CRX0034AC	CRX0034AE	34	CRX0034BC	CRX0034BE
30	40	CRX0040AC	CRX0040AE	40	CRX0040BC	CRX0040BE
40	52	CRX0052BC	CRX0052BE	52	CRX0052DC	CRX0052DE
50	65	CRX0065AC	CRX0065AE	65	CRX0065BC	CRX0065BE
60	77	CRX0077AC	CRX0077AE	77	CRX0077DC	CRX0077DE
75	96	CRX0096AC	CRX0096AE	96	CRX0096BC	CRX0096BE
100	124	CRX0124AC	CRX0124AE	124	CRX0124BC	CRX0124BE
125	156	CRX0156AC	CRX0156AE	156	CRX0156BC	CRX0156BE
150	180	CRX0180AC	CRX0180AE	180	CRX0180BC	CRX0180BE
200	240	CRX0240AC	CRX0240AE	240	CRX0240BC	CRX0240BE
250	302	CRX0302AC	CRX0302AE	302	CRX0302BC	CRX0302BE
300	361	CRX0361AC	CRX0361AE	361	CRX0361BC	CRX0361BE
350	414	CRX0414AC	CRX0414AE	414	CRX0414BC	CRX0414BE
400	477	CRX0477AC	CRX0477AE	477	CRX0477BC	CRX0477BE
450	515	CRX0515AC	CRX0515AE	515	CRX0515BC	CRX0515BE
500	590	CRX0590AC	CRX0590AE	590	CRX0590BC	CRX0590BE
600	720	CRX0720AC	CRX0720AE	750	CRX0750DC	CRX0750DE
700	840	CRX0840AC	CRX0840AE	900	CRX0900DC	CRX0900DE
800	960	CRX0960AC	CRX0960AE	1000	CRX1000DC	CRX1000DE
900	1080	CRX1080AC	CRX1080AE	1080	Consult Factory	
1000	1200	CRX1200AC	CRX1200AE	1200	CRX1200DC	CRX1200DE

HP Rating	600 Volt - 60Hz					
	3% Impedance*[1]			5% Impedance*[1]		
	Amps	Core & Coil Part Num.	Enclosed Part Num.	Amps	Core & Coil Part Num.	Enclosed Part Num.
0.5	1	CRX0001AC	CRX0001AE	1	CRX0001BC	CRX0001BE
0.75	1.4	CRX01D4AC	CRX01D4AE	1.4	CRX01D4BC	CRX01D4BE
1	1.8	CRX01D8AC	CRX01D8AE	1.8	CRX01D8BC	CRX01D8BE
1.5	2.6	CRX02D6AC	CRX02D6AE	2.6	CRX02D6BC	CRX02D6BE
2	2.7	CRX02D7AC	CRX02D7AE	2.7	CRX02D7BC	CRX02D7BE
3	3.9	CRX03D9AC	CRX03D9AE	3.9	CRX03D9BC	CRX03D9BE
5	6.1	CRX06D1AC	CRX06D1AE	6.1	CRX06D1BC	CRX06D1BE
7.5	9	CRX0009AC	CRX0009AE	9	CRX0009BC	CRX0009BE
10	11	CRX0011AC	CRX0011AE	11	CRX0011DC	CRX0011DE
15	17	CRX0017AC	CRX0017AE	17	CRX0017BC	CRX0017BE
20	22	CRX0022AC	CRX0022AE	22	CRX0022BC	CRX0022BE
25	27	CRX0027AC	CRX0027AE	27	CRX0027DC	CRX0027DE
30	32	CRX0032AC	CRX0032AE	32	CRX0032BC	CRX0032BE
40	41	CRX0041AC	CRX0041AE	41	CRX0041BC	CRX0041BE
50	52	CRX0052AC	CRX0052AE	52	CRX0052CC	CRX0052CE
60	62	CRX0062AC	CRX0062AE	62	CRX0062BC	CRX0062BE
75	77	CRX0077BC	CRX0077BE	77	CRX0077CC	CRX0077CE
100	99	CRX0099AC	CRX0099AE	99	CRX0099BC	CRX0099BE
125	125	CRX0125AC	CRX0125AE	125	CRX0125BC	CRX0125BE
150	144	CRX0144AC	CRX0144AE	144	CRX0144BC	CRX0144BE
200	192	CRX0192AC	CRX0192AE	192	CRX0192BC	CRX0192BE
250	242	CRX0242AC	CRX0242AE	242	CRX0242BC	CRX0242BE
300	289	CRX0289AC	CRX0289AE	289	CRX0289BC	CRX0289BE
350	336	CRX0336AC	CRX0336AE	336	CRX0336BC	CRX0336BE
400	382	CRX0382AC	CRX0382AE	382	CRX0382BC	CRX0382BE
450	412	CRX0412AC	CRX0412AE	412	CRX0412BC	CRX0412BE
500	472	CRX0472AC	CRX0472AE	472	CRX0472BC	CRX0472BE
600	600	CRX0600CC	CRX0600CE	600	CRX0600EC	CRX0600EE
700	700	CRX0700CC	CRX0700CE	700	CRX0700EC	CRX0700EE
800	750	CRX0750CC	CRX0750CE	750	CRX0750EC	CRX0750EE
900	900	CRX0900CC	CRX0900CE	900	CRX0900EC	CRX0900EE
1000	1000	CRX1000CC	CRX1000CE	1000	CRX1000EC	CRX1000EE
1250	1200	CRX1200CC	CRX1200CE	1200	CRX1200EC	CRX1200EE

*Impedance levels are for 60 Hz operation
[1]De-rated for 690V
All dimensions in inches
Refer to page 18 for drawings

HPS Centurion® R
Line Reactor

SELECTION TABLES Continued...

HP Rating (kW)	380 Volt - 50Hz					
	3% Impedance*			5% Impedance*		
	Amps	Core & Coil Part Num.	Enclosed Part Num.	Amps	Core & Coil Part Num.	Enclosed Part Num.
1 (0.75)	2.1	CRX02D1NC	CRX02D1NE	2.1	CRX02D1PC	CRX02D1PE
1.5 (1.1)	3.0	CRX0003NC	CRX0003NE	3.0	CRX0003PC	CRX0003PE
2 (1.5)	3.7	Consult Factory	Consult Factory	3.7	Consult Factory	Consult Factory
3	4.8	CRX04D8NC	CRX04D8NE	4.8	CRX04D8PC	CRX04D8PE
5	8.0	CRX0008NC	CRX0008NE	8.0	CRX0008PC	CRX0008PE
7.5	11.8	CRX11D8NC	CRX11D8NE	11.8	CRX11D8PC	CRX11D8PE
10	15.6	CRX15D6NC	CRX15D6NE	15.6	CRX15D6PC	CRX15D6PE
15	23.0	CRX0023NC	CRX0023NE	23.0	CRX0023PC	CRX0023PE
20	30.5	CRX30D5NC	CRX30D5NE	30.5	CRX30D5PC	CRX30D5PE
25	37.8	CRX37D8NC	CRX37D8NE	37.8	CRX37D8PC	CRX37D8PE
30	45.2	CRX45D2NC	CRX45D2NE	45.2	CRX45D2PC	CRX45D2PE
40	59.8	CRX59D8NC	CRX59D8NE	59.8	CRX59D8PC	CRX59D8PE
50	74.4	CRX74D4NC	CRX74D4NE	74.4	CRX74D4PC	CRX74D4PE
60	89.0	CRX0089NC	CRX0089NE	89.0	CRX0089PC	CRX0089PE
75	110.7	Consult Factory	Consult Factory	110.7	CRX0111PC	CRX0111PE
100	147.0	CRX0147NC	CRX0147NE	147	CRX0147PC	CRX0147PE
125	183.0	CRX0183NC	CRX0183NE	183	CRX0183PC	CRX0183PE
150	219.0	CRX0219NC	CRX0219NE	219	CRX0219PC	CRX0219PE
200	291.0	CRX0291NC	CRX0219NE	291	CRX0291PC	CRX0291PE

HP Rating	525 Volt - 50Hz					
	3% Impedance*			5% Impedance*		
	Amps	Core & Coil Part Num.	Enclosed Part Num.	Amps	Core & Coil Part Num.	Enclosed Part Num.
1	2.0	Consult Factory	Consult Factory	2.0	Consult Factory	Consult Factory
1.5	2.0	Consult Factory	Consult Factory	2.0	Consult Factory	Consult Factory
2	4.0	Consult Factory	Consult Factory	4.0	Consult Factory	Consult Factory
3	4.0	Consult Factory	Consult Factory	4.0	Consult Factory	Consult Factory
5	8.0	Consult Factory	Consult Factory	8.0	Consult Factory	Consult Factory
7.5	12.0	Consult Factory	Consult Factory	12.0	Consult Factory	Consult Factory
10	12.0	Consult Factory	Consult Factory	12.0	Consult Factory	Consult Factory
15	18.0	Consult Factory	Consult Factory	18.0	Consult Factory	Consult Factory
20	25.0	Consult Factory	Consult Factory	25.0	Consult Factory	Consult Factory
25	35.0	Consult Factory	Consult Factory	35.0	Consult Factory	Consult Factory
30	35.0	Consult Factory	Consult Factory	35.0	Consult Factory	Consult Factory
40	45.0	Consult Factory	Consult Factory	45.0	Consult Factory	Consult Factory
50	55.0	Consult Factory	Consult Factory	55.0	Consult Factory	Consult Factory
60	80.0	Consult Factory	Consult Factory	80.0	Consult Factory	Consult Factory
75	80.0	Consult Factory	Consult Factory	80.0	Consult Factory	Consult Factory
100	110.0	Consult Factory	Consult Factory	110.0	Consult Factory	Consult Factory
125	130.0	Consult Factory	Consult Factory	130.0	Consult Factory	Consult Factory
150	160.0	Consult Factory	Consult Factory	160.0	Consult Factory	Consult Factory
200	200.0	Consult Factory	Consult Factory	200.0	Consult Factory	Consult Factory

HP Rating	690 Volt - 50Hz					
	3% Impedance*			5% Impedance*		
	Amps	Core & Coil Part Num.	Enclosed Part Num.	Amps	Core & Coil Part Num.	Enclosed Part Num.
1	1.2	CRX01D2NC	CRX01D2NE	1.2	Consult Factory	Consult Factory
1.5	1.6	CRX01D6NC	CRX01D6NE	1.7	Consult Factory	Consult Factory
2	2.0	CRX0002NC	CRX0002NE	2.0	Consult Factory	Consult Factory
3	3.4	CRX03D4NC	CRX03D4NE	3.4	Consult Factory	Consult Factory
5	4.5	Consult Factory	Consult Factory	4.5	Consult Factory	Consult Factory
7.5	7.5	CRX07D5NC	CRX07D5NE	7.5	Consult Factory	Consult Factory
10	11.0	CRX0011NC	CRX0011NE	11.0	Consult Factory	Consult Factory
15	14.0	CRX0014NC	CRX0014NE	14.0	Consult Factory	Consult Factory
20	18.0	CRX0018NC	CRX0018NE	18.0	Consult Factory	Consult Factory
25	21.0	CRX0021NC	CRX0021NE	21.0	Consult Factory	Consult Factory
30	25.0	CRX0025NC	CRX0025NE	25.0	Consult Factory	Consult Factory
40	33.0	CRX0033NC	CRX0033NE	33.0	Consult Factory	Consult Factory
50	45.0	CRX0045NC	CRX0045NE	45.0	Consult Factory	Consult Factory
60	55.0	CRX0055NC	CRX0055NE	55.0	Consult Factory	Consult Factory
75	65.0	CRX0065NC	CRX0065NE	65.0	Consult Factory	Consult Factory
100	80.0	CRX0080NC	CRX0080NE	80.0	Consult Factory	Consult Factory
125	96.0	CRX0096NC	CRX0096NE	100.0	Consult Factory	Consult Factory
150	130.0	CRX0130NC	CRX0130NE	130.0	Consult Factory	Consult Factory
200	160.0	CRX0160NC	CRX0160NE	160.0	Consult Factory	Consult Factory

All dimensions in inches
Refer to page 18 for drawings

Open Core & Coil Specification Charts

60 Hz

RMS Amp	Core & Coil	Inductance (mH)	Watts Loss	Width	Depth	Height	Mtg. Width	Mtg. Depth	Mtg. Slot w x d	Diagram Figure	Termination Style Ref.	Frame Size	Enclosure Kit (Optional for Field Install)	Weight (lb)
1	CRX0001AC	27.2	21	4.13	2.29	5.13	2.81	1.79	0.28 x 0.38	1	1	1A	CREN1	2.5
	CRX0001BC	47.09	12	4.13	2.29	5.13	2.81	1.79	0.28 x 0.38	1	1	1A	CREN1	2.5
1.1	CRX01D1AC	20.36	12	4.13	2.29	5.13	2.81	1.79	0.28 x 0.38	1	1	1A	CREN1	2.5
	CRX01D1BC	33.94	15	4.13	2.29	5.13	2.81	1.79	0.28 x 0.38	1	1	1A	CREN1	2.5
1.4	CRX01D4AC	20.36	12	4.13	2.29	5.13	2.81	1.79	0.28 x 0.38	1	1	1A	CREN1	2.5
	CRX01D4BC	33.94	15	4.13	2.29	5.13	2.81	1.79	0.28 x 0.38	1	1	1A	CREN1	2.5
1.6	CRX01D6AC	14.91	15	4.13	2.29	5.13	2.81	1.79	0.28 x 0.38	1	1	1A	CREN1	2.5
	CRX01D6BC	23.55	12	4.13	2.29	5.13	2.81	1.79	0.28 x 0.38	1	1	1A	CREN1	2.5
1.8	CRX01D8AC	14.91	15	4.13	2.29	5.13	2.81	1.79	0.28 x 0.38	1	1	1A	CREN1	2.5
	CRX01D8BC	27.2	21	4.13	2.29	5.13	2.81	1.79	0.28 x 0.38	1	1	1A	CREN1	2.5
2	CRX0002CC	20	15	4.13	2.29	5.13	2.81	1.79	0.28 x 0.38	1	1	1A	CREN1	3
2.1	CRX02D1AC	10.61	19	4.13	2.29	5.13	2.81	1.79	0.28 x 0.38	1	1	1A	CREN1	2.5
	CRX02D1BC	17.83	21	4.13	2.29	5.13	2.81	1.79	0.28 x 0.38	1	1	1A	CREN1	3
2.4	CRX02D4AC	4.67	29	4.13	2.29	5.13	2.81	1.79	0.28 x 0.38	1	1	1A	CREN1	3
	CRX02D4BC	4.08	9	4.13	2.29	5.13	2.81	1.79	0.28 x 0.38	1	1	1A	CREN1	2.5
	CRX02D4CC	7.06	22	4.13	2.29	5.13	2.81	1.79	0.28 x 0.38	1	1	1A	CREN1	3
	CRX02D4DC	7.06	22	4.13	2.29	5.13	2.81	1.79	0.28 x 0.38	1	1	1A	CREN1	3
2.6	CRX02D6AC	10.61	35	4.13	2.29	5.13	2.81	1.79	0.28 x 0.38	1	1	1A	CREN1	3
	CRX02D6BC	17.83	21	4.13	2.29	5.13	2.81	1.79	0.28 x 0.38	1	1	1A	CREN1	3
2.7	CRX02D7AC	10.61	19	4.13	2.29	5.13	2.81	1.79	0.28 x 0.38	1	1	1A	CREN1	2.5
	CRX02D7BC	17.83	21	4.13	2.29	5.13	2.81	1.79	0.28 x 0.38	1	1	1A	CREN1	3
3	CRX0003AC	7.06	22	4.13	2.29	5.13	2.81	1.79	0.28 x 0.38	1	1	1A	CREN1	3
	CRX0003BC	10.61	35	4.13	2.29	5.13	2.81	1.79	0.28 x 0.38	1	1	1A	CREN1	3
3.4	CRX03D4AC	7.06	22	4.13	2.29	5.13	2.81	1.79	0.28 x 0.38	1	1	1A	CREN1	3
	CRX03D4BC	10.61	35	4.13	2.29	5.13	2.81	1.79	0.28 x 0.38	1	1	1A	CREN1	3
3.5	CRX03D5AC	2.8	15	4.13	2.29	5.13	2.81	1.79	0.28 x 0.38	1	1	1A	CREN1	2.5
	CRX03D5BC	3.55	18	4.13	2.29	5.13	2.81	1.79	0.28 x 0.38	1	1	1A	CREN1	2.5
	CRX03D5CC	5.09	40	6.5	5	6.13	4.38	4	0.28 x 0.38	1	2	1D	CREN1	11
	CRX03D5DC	4.67	29	4.13	2.29	5.13	2.81	1.79	0.28 x 0.38	1	1	1A	CREN1	3
3.9	CRX03D9AC	7.06	22	4.13	2.29	5.13	2.81	1.79	0.28 x 0.38	1	1	1A	CREN1	3
	CRX03D9BC	10.61	35	4.13	2.29	5.13	2.81	1.79	0.28 x 0.38	1	1	1A	CREN1	3
4	CRX0004CC	9.1	26	4.13	2.29	5.13	2.81	1.79	0.28 x 0.38	1	1	1A	CREN1	3
4.6	CRX04D6AC	2.13	15	4.13	2.29	5.13	2.81	1.79	0.28 x 0.38	1	1	1A	CREN1	2.5
	CRX04D6BC	2.13	15	4.13	2.29	5.13	2.81	1.79	0.28 x 0.38	1	1	1A	CREN1	2.5
	CRX04D6CC	3.55	18	4.13	2.29	5.13	2.81	1.79	0.28 x 0.38	1	1	1A	CREN1	2.5
	CRX04D6DC	4.67	29	4.13	2.29	5.13	2.81	1.79	0.28 x 0.38	1	1	1A	CREN1	3
4.8	CRX04D8AC	4.7	22	4.13	2.29	5.13	2.81	1.79	0.28 x 0.38	1	1	1A	CREN1	3
	CRX04D8BC	7.78	35	4.13	3.51	5.13	2.87	2.63	0.28 x 0.38	1	1	1B	CREN1	4.5
6.1	CRX06D1AC	4.67	29	4.13	2.29	5.13	2.81	1.79	0.28 x 0.38	1	1	1A	CREN1	3
	CRX06D1BC	7.78	35	4.13	3.51	5.13	2.87	2.63	0.28 x 0.38	1	1	1B	CREN1	4.5
6.6	CRX06D6AC	1.48	18	4.13	2.29	5.13	2.81	1.79	0.28 x 0.38	1	1	1A	CREN1	2.5
	CRX06D6BC	1.48	18	4.13	2.29	5.13	2.81	1.79	0.28 x 0.38	1	1	1A	CREN1	2.5
	CRX06D6CC	2.33	24	4.13	2.29	5.13	2.81	1.79	0.28 x 0.38	1	1	1A	CREN1	3
	CRX06D6DC	3.06	31	4.13	3.51	5.13	2.87	2.63	0.28 x 0.38	1	1	1B	CREN1	4.5
7.5	CRX07D5AC	1.31	18	4.13	2.29	5.13	2.81	1.79	0.28 x 0.38	1	1	1A	CREN1	2.5
	CRX07D5BC	1.53	25	4.13	3.51	5.38	2.87	2.63	0.28 x 0.38	1	2	1C	CREN1	4.5
	CRX07D5CC	2.33	24	4.13	2.29	5.13	2.81	1.79	0.28 x 0.38	1	1	1A	CREN1	3
	CRX07D5DC	2.33	24	4.13	2.29	5.13	2.81	1.79	0.28 x 0.38	1	1	1A	CREN1	3
7.6	CRX07D6AC	3.06	31	4.13	3.51	5.13	2.87	2.63	0.28 x 0.38	1	1	1B	CREN1	4.5
	CRX07D6BC	5.09	40	6.5	5	6.13	4.38	4	0.28 x 0.38	1	2	1D	CREN1	11
8	CRX0008CC	7.5	39	6.5	5	6.13	4.38	4	0.28 x 0.38	1	2	1D	CREN1	12
9	CRX0009AC	3.06	31	4.13	3.51	5.13	2.87	2.63	0.28 x 0.38	1	1	1B	CREN1	4.5
	CRX0009BC	5.09	40	6.5	5	6.13	4.38	4	0.28 x 0.38	1	2	1D	CREN1	11
10.7	CRX10D7AC	0.95	30	4.13	3.51	5.38	2.87	2.63	0.28 x 0.38	1	2	1C	CREN1	4.5
	CRX10D7BC	0.95	30	4.13	3.51	5.38	2.87	2.63	0.28 x 0.38	1	2	1C	CREN1	4.5
	CRX10D7CC	1.64	37	4.13	3.51	5.38	2.87	2.63	0.28 x 0.38	1	2	1C	CREN1	4.5
	CRX10D7DC	1.53	25	4.13	3.51	5.38	2.87	2.63	0.28 x 0.38	1	2	1C	CREN1	4.5

All dimensions in inches
Refer to page 18 for drawings

HPS Centurion® R
Line Reactor

Open Core & Coil Specification Charts Continued

60 Hz

RMS Amp	Core & Coil	Inductance (mH)	Watts Loss	Width	Depth	Height	Mtg. Width	Mtg. Depth	Mtg. Slot w x d	Diagram Figure	Termination Style Ref.	Frame Size	Enclosure Kit (Optional for Field Install)	Weight (lb)
11	CRX0011AC	2.57	36	4.13	3.51	5.38	2.87	2.63	0.28 x 0.38	1	2	1C	CREN1	5
	CRX0011BC	2.10	31	4.13	3.51	5.38	2.87	2.63	0.28 x 0.38	1	2	1C	CREN1	4.5
	CRX0011CC	3.40	39	6.50	5.00	6.13	4.38	4.00	0.28 x 0.38	1	2	1D	CREN1	11
	CRX0011DC	4.28	45	6.50	5.00	6.13	4.38	4.00	0.28 x 0.38	1	2	1D	CREN1	11
12	CRX0012CC	4.20	52	6.50	5.00	6.13	4.38	4.00	0.28 x 0.38	1	2	1D	CREN1	12
14	CRX0014AC	1.64	37	4.13	3.51	5.38	2.87	2.63	0.28 x 0.38	1	2	1C	CREN1	4.5
	CRX0014BC	2.73	57	6.50	5.00	6.13	4.38	4.00	0.28 x 0.38	1	2	1D	CREN1	11.5
16.7	CRX16D7AC	0.59	30	4.13	3.51	5.38	2.87	2.63	0.28 x 0.38	1	2	1C	CREN1	4.5
	CRX16D7BC	0.59	30	4.13	3.51	5.38	2.87	2.63	0.28 x 0.38	1	2	1C	CREN1	4.5
	CRX16D7CC	1.06	57	6.50	5.00	6.13	4.38	4.00	0.28 x 0.38	1	3	1D	CREN1	11.5
	CRX16D7DC	0.95	30	4.13	3.51	5.38	2.87	2.63	0.28 x 0.38	1	2	1C	CREN1	4.5
17	CRX0017AC	1.66	51	6.50	5.00	6.13	4.38	4.00	0.28 x 0.38	1	2	1D	CREN1	10.5
	CRX0017BC	2.73	57	6.50	5.00	6.13	4.38	4.00	0.28 x 0.38	1	2	1D	CREN1	11.5
21	CRX0021AC	1.06	57	6.50	5.00	6.13	4.38	4.00	0.28 x 0.38	1	3	1D	CREN1	11.5
	CRX0021BC	1.80	57	6.50	5.00	6.13	4.38	4.00	0.28 x 0.38	1	2	1D	CREN1	11.5
22	CRX0022AC	1.28	51	6.50	5.00	6.13	4.38	4.00	0.28 x 0.38	1	2	1D	CREN1	11
	CRX0022BC	2.14	77	6.50	5.00	6.13	4.38	4.00	0.28 x 0.38	1	2	1D	CREN1	12
24	CRX0024AC	0.41	35	4.13	3.51	5.38	2.87	2.63	0.28 x 0.38	1	2	1C	CREN1	4.5
	CRX0024BC	0.55	68	6.50	5.00	6.13	4.38	4.00	0.28 x 0.38	1	3	1D	CREN1	12
	CRX0024CC	0.68	47	6.50	5.00	6.13	4.38	4.00	0.28 x 0.38	1	2	1D	CREN1	11
	CRX0024DC	0.86	60	6.50	5.00	6.13	4.38	4.00	0.28 x 0.38	1	3	1D	CREN1	10.5
27	CRX0027AC	1.06	57	6.50	5.00	6.13	4.38	4.00	0.28 x 0.38	1	3	1D	CREN1	11.5
	CRX0027BC	0.86	60	6.50	5.00	6.13	4.38	4.00	0.28 x 0.38	1	3	1D	CREN1	10.5
	CRX0027CC	1.40	57	6.50	5.00	6.13	4.38	4.00	0.28 x 0.38	1	3	1D	CREN1	12.5
	CRX0027DC	1.77	93	7.12	4.69	6.38	4.80	3.27	0.38 x 0.50	2	3	2A	CREN2	11.5
31	CRX0031AC	0.32	31	6.50	5.00	6.13	4.38	4.00	0.28 x 0.38	1	3	1D	CREN1	10.5
	CRX0031BC	0.32	31	6.50	5.00	6.13	4.38	4.00	0.28 x 0.38	1	3	1D	CREN1	10.5
	CRX0031CC	0.55	68	6.50	5.00	6.13	4.38	4.00	0.28 x 0.38	1	3	1D	CREN1	12
	CRX0031DC	0.68	80	6.50	5.00	6.13	4.38	4.00	0.28 x 0.38	1	3	1D	CREN1	12.5
32	CRX0032AC	0.88	68	6.50	5.00	6.13	4.38	4.00	0.28 x 0.38	1	3	1D	CREN1	12
	CRX0032BC	1.43	80	7.12	4.69	6.38	4.80	3.27	0.38 x 0.50	2	3	2A	CREN2	12.5
34	CRX0034AC	0.68	80	6.50	5.00	6.13	4.38	4.00	0.28 x 0.38	1	3	1D	CREN1	12.5
	CRX0034BC	1.13	115	7.12	5.19	6.38	4.80	3.77	0.38 x 0.50	2	3	2B	CREN2	12
35	CRX0035CC	1.70	93	7.12	5.19	6.38	4.80	3.77	0.38 x 0.50	2	3	2B	CREN2	24
40	CRX0040AC	0.55	68	6.50	5.00	6.13	4.38	4.00	0.28 x 0.38	1	3	1D	CREN1	12
	CRX0040BC	0.94	105	7.12	4.69	6.38	4.80	3.27	0.38 x 0.50	2	3	2A	CREN2	12.5
41	CRX0041AC	0.68	80	6.50	5.00	6.13	4.38	4.00	0.28 x 0.38	1	3	1D	CREN1	12.5
	CRX0041BC	1.13	115	7.12	5.19	6.38	4.80	3.77	0.38 x 0.50	2	3	2B	CREN2	12
45	CRX0045CC	1.20	140	7.12	5.19	6.38	4.80	3.77	0.38 x 0.50	2	3	2B	CREN2	24
46	CRX0046AC	0.21	40	6.50	5.00	6.13	4.38	4.00	0.28 x 0.38	1	3	1D	CREN1	11
	CRX0046BC	0.21	40	6.50	5.00	6.13	4.38	4.00	0.28 x 0.38	1	3	1D	CREN1	11
	CRX0046CC	0.36	60	6.50	5.00	6.13	4.38	4.00	0.28 x 0.38	1	3	1D	CREN1	11.5
	CRX0046DC	0.45	130	7.12	4.69	6.38	4.80	3.27	0.38 x 0.50	2	3	2A	CREN2	19
52	CRX0052AC	0.50	70	7.12	4.69	6.38	4.80	3.27	0.38 x 0.50	2	3	2A	CREN2	15
	CRX0052BC	0.43	85	7.12	4.69	6.38	4.80	3.27	0.38 x 0.50	2	3	2A	CREN2	17
	CRX0052CC	0.91	130	7.12	5.19	6.38	4.8	3.77	0.38 x 0.50	2	3	2B	CREN2	25
	CRX0052DC	0.74	170	7.12	5.19	6.38	4.8	3.77	0.38 x 0.50	2	3	2B	CREN2	25
59	CRX0059AC	0.17	55	6.5	5	6.13	4.38	4	0.28 x 0.38	1	3	1D	CREN1	11.5
	CRX0059BC	0.22	85	7.25	5.88	5.63	4.8	3.27	0.38 x 0.50	3	4	3A	CREN2	18
	CRX0059CC	0.3	75	7.12	4.69	6.38	4.8	3.27	0.38 x 0.50	2	3	2A	CREN2	16
	CRX0059DC	0.36	110	7.25	6	5.63	4.8	3.77	0.38 x 0.50	3	4	3C	CREN2	25
62	CRX0062AC	0.45	130	7.12	4.69	6.38	4.8	3.27	0.38 x 0.50	2	3	2A	CREN2	19
	CRX0062BC	0.74	170	7.12	5.19	6.38	4.8	3.77	0.38 x 0.50	2	3	2B	CREN2	25
65	CRX0065AC	0.34	110	7.25	6	5.63	4.8	3.77	0.38 x 0.50	3	4	3C	CREN2	25
	CRX0065BC	0.57	120	7.25	6	5.63	4.8	3.77	0.38 x 0.50	3	4	3C	CREN2	25

All dimensions in inches
Refer to page 18 for drawings

60 Hz

RMS Amp	Core & Coil	Inductance (mH)	Watts Loss	Width	Depth	Height	Mtg. Width	Mtg. Depth	Mtg. Slot w x d	Diagram Figure	Termination Style Ref.	Frame Size	Enclosure Kit (Optional for Field Install)	Weight (lb)
75	CRX0075AC	0.12	70	7.25	5.88	5.63	4.8	3.27	0.38 x 0.50	3	4	3A	CREN2	17
	CRX0075BC	0.19	95	7.25	5.88	5.63	4.8	3.27	0.38 x 0.50	3	4	3A	CREN2	18
	CRX0075CC	0.22	85	7.25	5.88	5.63	4.8	3.27	0.38 x 0.50	3	4	3A	CREN2	18
	CRX0075DC	0.29	105	7.25	6	5.63	4.8	3.77	0.38 x 0.50	3	4	3C	CREN2	21
77	CRX0077AC	0.29	105	7.25	6	5.63	4.8	3.77	0.38 x 0.50	3	4	3C	CREN2	21
	CRX0077BC	0.36	110	7.25	6	5.63	4.8	3.77	0.38 x 0.50	3	4	3C	CREN2	25
	CRX0077CC	0.6	216	9.25	6.25	7	6	3.7	0.44 x 1.0	3	4	3E	CREN2	30
	CRX0077DC	0.49	160	7.25	6	5.63	4.8	3.77	0.38 x 0.50	3	4	3C	CREN2	24
88	CRX0088AC	0.12	70	7.25	5.88	5.63	4.8	3.27	0.38 x 0.50	3	4	3A	CREN2	17
	CRX0088BC	0.12	70	7.25	5.88	5.63	4.8	3.27	0.38 x 0.50	3	4	3A	CREN2	17
	CRX0088CC	0.19	95	7.25	5.88	5.63	4.8	3.27	0.38 x 0.50	3	4	3A	CREN2	18
	CRX0088DC	0.24	120	7.25	6	5.63	4.8	3.77	0.38 x 0.50	3	4	3C	CREN2	24
96	CRX0096AC	0.24	120	7.25	6	5.63	4.8	3.77	0.38 x 0.50	3	4	3C	CREN2	24
	CRX0096BC	0.39	170	9.25	8.25	7	6	5.7	0.44 x 1.0	3	4	3N	CREN2	49
99	CRX0099AC	0.28	125	7.25	6	5.63	4.8	3.77	0.38 x 0.50	3	4	3C	CREN2	26
	CRX0099BC	0.48	210	9.25	8	7	6	5.45	0.44 x 1.0	3	4	3L	CREN2	48
114	CRX0114AC	0.09	70	7.25	6	5.63	4.8	3.27	0.38 x 0.50	3	5	3B	CREN2	18
	CRX0114BC	0.11	140	9.25	6.75	7	6	3.83	0.44 x 1.0	3	5	3F	CREN2	28
	CRX0114CC	0.14	110	9.25	7.25	7	6	4.33	0.44 x 1.0	3	5	3J	CREN2	33
	CRX0114DC	0.19	190	10.8	8.25	10	7.2	5.21	0.44 x 1.0	4	5	4A	CRECH2	52
124	CRX0124AC	0.19	190	10.8	8.25	10	7.2	5.21	0.44 x 1.0	4	5	4A	CRECH2	52
	CRX0124BC	0.3	185	9.25	8.63	7	6	5.2	0.44 x 1.0	3	5	3Q	CREN2	48
125	CRX0125AC	0.23	160	9.25	7.63	7	6	4.7	0.44 x 1.0	3	5	3K	CREN2	41
	CRX0125BC	0.38	250	10.8	9.13	10	7.2	6.08	0.44 x 1.0	4	5	4C	CRECH2	67
143	CRX0143AC	0.07	88	7.25	6	5.63	4.8	3.27	0.38 x 0.50	3	5	3B	CREN2	20
	CRX0143BC	0.1	130	9.25	7	7	6	3.95	0.44 x 1.0	3	5	3H	CREN2	34
	CRX0143CC	0.11	140	9.25	6.75	7	6	3.83	0.44 x 1.0	3	5	3F	CREN2	28
	CRX0143DC	0.11	140	9.25	6.75	7	6	3.83	0.44 x 1.0	3	5	3F	CREN2	28
144	CRX0144AC	0.19	190	10.8	8.25	10	7.2	5.21	0.44 x 1.0	4	5	4A	CRECH2	52
	CRX0144BC	0.35	240	10.8	9.5	10	7.2	6.33	0.44 x 1.0	4	5	4D	CRECH4	74
156	CRX0156AC	0.15	210	9.25	7	7	6	4.08	0.44 x 1.0	3	5	3G	CREN2	32
	CRX0156BC	0.24	260	9.25	8.63	7	6	5.7	0.44 x 1.0	3	5	3R	CRECH2	52
170	CRX0170AC	0.06	100	7.25	6.25	5.63	4.8	3.77	0.38 x 0.50	3	5	3D	CREN2	23
	CRX0170BC	0.06	100	7.25	6.25	5.63	4.8	3.77	0.38 x 0.50	3	5	3D	CREN2	23
	CRX0170CC	0.1	130	9.25	7	7	6	3.95	0.44 x 1.0	3	5	3H	CREN2	34
	CRX0170DC	0.1	130	9.25	7	7	6	3.95	0.44 x 1.0	3	5	3H	CREN2	34
180	CRX0180AC	0.13	180	9.25	8.88	7	6	5.95	0.44 x 1.0	3	5	3S	CRECH2	54
	CRX0180BC	0.21	250	10.8	8.38	10	7.2	5.33	0.44 x 1.0	4	5	4B	CRECH2	63
192	CRX0192AC	0.15	200	9.25	8.25	7	6	5.45	0.44 x 1.0	3	5	3P	CRECH2	53
	CRX0192BC	0.25	325	10.8	10.5	10	7.2	7.33	0.44 x 1.0	4	5	4E	CRECH2	90
200	CRX0200CC	0.11	195	9.25	7.63	7	6	4.7	0.44 x 1.0	3	5	3K	CRECH2	44
211	CRX0211AC	0.05	125	7.25	6.25	5.63	4.80	3.77	0.38 x 0.50	3	5	3D	CREN2	24
	CRX0211BC	0.05	125	7.25	6.25	5.63	4.80	3.77	0.38 x 0.50	3	5	3D	CREN2	24
	CRX0211CC	0.08	180	9.25	7.63	7.00	6.00	4.70	0.44 x 1.0	3	5	3K	CRECH2	39
	CRX0211DC	0.10	225	11.05	8.25	10.00	7.20	5.21	0.44 x 1.0	4	5	4G	CRECH2	58
240	CRX0240AC	0.10	225	11.05	8.25	10.00	7.20	5.21	0.44 x 1.0	4	5	4G	CRECH2	58
	CRX0240BC	0.16	435	13.75	11.63	12.50	9.00	8.70	0.44 x 1.0	4	5	4V	CRECH4	155
242	CRX0242AC	0.12	275	11.05	8.25	10.00	7.20	5.08	0.44 x 1.0	4	5	4F	CRECH2	59
	CRX0242BC	0.20	360	11.05	9.50	10.00	7.20	6.46	0.44 x 1.0	4	5	4M	CRECH4	87
273	CRX0273AC	0.04	130	9.25	8.13	7.00	6.00	5.20	0.44 x 1.0	3	5	3M	CRECH2	43
	CRX0273BC	0.04	130	9.25	8.13	7.00	6.00	5.20	0.44 x 1.0	3	5	3M	CRECH2	43
	CRX0273CC	0.06	200	11.05	9.13	10.00	7.20	6.08	0.44 x 1.0	4	5	4L	CRECH4	67
	CRX0273DC	0.08	310	13.75	9.00	12.50	9.00	6.05	0.44 x 1.0	4	5	4M	CRECH4	84

All dimensions in inches
Refer to page 18 for drawings

HPS Centurion® R
Line Reactor

Open Core & Coil Specification Charts Continued

60 Hz

RMS Amp	Core & Coil	Inductance (mH)	Watts Loss	Width	Depth	Height	Mtg. Width	Mtg. Depth	Mtg. Slot w x d	Diagram Figure	Termination Style Ref.	Frame Size	Enclosure Kit (Optional for Field Install)	Weight (lb)
289	CRX0289AC	0.10	290	11.05	9.00	10.00	7.20	5.96	0.44 x 1.0	4	5	4K	CRECH4	75
	CRX0289BC	0.16	435	13.75	11.63	12.50	9.00	8.70	0.44 x 1.0	4	5	4V	CRECH4	155
302	CRX0302AC	0.08	310	13.75	9.00	12.50	9.00	6.05	0.44 x 1.0	4	5	4M	CRECH4	84
	CRX0302BC	0.13	475	13.75	11.38	14.50	9.00	8.42	0.44 x 1.0	4	5	4AA	CRECH4	171
336	CRX0336AC	0.08	360	13.75	9.38	14.50	9.00	6.42	0.44 x 1.0	4	5	4W	CRECH4	110
	CRX0336BC	0.13	475	13.75	11.38	14.50	9.00	8.42	0.44 x 1.0	4	5	4AA	CRECH4	171
343	CRX0343AC	0.03	200	11.05	8.63	10.00	7.20	5.58	0.44 x 1.0	4	5	4H	CRECH4	57
	CRX0343BC	0.03	200	11.05	8.63	10.00	7.20	5.58	0.44 x 1.0	4	5	4H	CRECH4	57
	CRX0343CC	0.05	230	11.05	8.88	10.00	7.20	5.83	0.44 x 1.0	4	5	4J	CRECH4	66
	CRX0343DC	0.06	325	13.75	9.38	12.50	9.00	6.42	0.44 x 1.0	4	5	4Q	CRECH4	95
361	CRX0361AC	0.06	325	13.75	9.38	12.50	9.00	6.42	0.44 x 1.0	4	5	4Q	CRECH4	95
	CRX0361BC	0.10	445	13.75	11.38	12.50	9.00	8.42	0.44 x 1.0	4	5	4U	CRECH5	147
382	CRX0382AC	0.07	435	13.75	10.38	12.50	9.00	7.30	0.44 x 1.0	4	5	4S	CRECH5	116
	CRX0382BC	0.12	580	13.75	11.50	14.50	9.00	8.67	0.44 x 1.0	4	5	4AB	CRECH5	180
396	CRX0396AC	0.03	200	11.05	8.63	10.00	7.20	5.58	0.44 x 1.0	4	5	4H	CRECH4	57
	CRX0396BC	0.03	200	11.05	8.63	10.00	7.20	5.58	0.44 x 1.0	4	5	4H	CRECH4	57
	CRX0396CC	0.04	300	13.75	9.38	12.50	9.00	6.42	0.44 x 1.0	4	5	4Q	CRECH4	92
	CRX0396DC	0.04	300	13.75	9.38	12.50	9.00	6.42	0.44 x 1.0	4	5	4Q	CRECH4	92
412	CRX0412AC	0.07	435	13.75	10.38	12.50	9.00	7.30	0.44 x 1.0	4	5	4S	CRECH5	116
	CRX0412BC	0.11	550	13.75	10.88	12.50	9.00	7.92	0.44 x 1.0	4	5	4T	CRECH5	146
414	CRX0414AC	0.06	400	13.75	10.13	12.50	9.00	7.17	0.44 x 1.0	4	5	4R	CRECH5	125
	CRX0414BC	0.08	505	13.75	11.38	12.50	9.00	8.42	0.44 x 1.0	4	5	4U	CRECH5	143
472	CRX0472AC	0.06	400	13.75	10.13	12.50	9.00	7.17	0.44 x 1.0	4	5	4R	CRECH5	125
	CRX0472BC	0.10	560	13.75	11.63	12.50	9.00	8.70	0.44 x 1.0	4	5	4V	CRECH5	171
477	CRX0477AC	0.05	420	13.75	10.88	14.50	9.00	7.42	0.44 x 1.0	4	6	4Z	CRECH6	145
	CRX0477BC	0.08	600	13.75	13.38	14.50	9.00	9.92	0.44 x 1.0	4	6	4AC	CRECH6	220
515	CRX0515AC	0.05	420	13.75	10.88	14.50	9.00	7.42	0.44 x 1.0	4	6	4Z	CRECH6	145
	CRX0515BC	0.08	600	13.75	13.38	14.50	9.00	9.92	0.44 x 1.0	4	6	4AC	CRECH6	220
528	CRX0528AC	0.02	220	13.75	9.38	12.50	9.00	5.70	0.44 x 1.0	4	6	4P	CRECH5	74
	CRX0528BC	0.02	220	13.75	9.38	12.50	9.00	5.70	0.44 x 1.0	4	6	4P	CRECH5	74
	CRX0528CC	0.03	355	13.75	9.63	14.50	9.00	6.17	0.44 x 1.0	4	6	4X	CRECH5	102
	CRX0528DC	0.04	495	13.75	10.63	14.50	9.00	7.17	0.44 x 1.0	4	6	4Y	CRECH5	133
590	CRX0590AC	0.04	495	13.75	10.63	14.50	9.00	7.17	0.44 x 1.0	4	6	4Y	CRECH5	133
	CRX0590BC	0.06	680	13.75	13.38	14.50	9.00	9.92	0.44 x 1.0	4	6	4AC	CRECH6	220
600	CRX0600CC	0.046	525	13.75	12.13	14.5	9	8.67	0.44 x 1.0	4	6	4AD	CRECH6	210
	CRX0600EC	0.077	675	13.75	13.13	14.5	9	9.67	0.44 x 1.0	4	6	4AE	CRECH6	230
700	CRX0700CC	0.039	615	14.25	12.38	14.5	9.5	7.92	0.44 x 1.0	4	6	4AF	CRECH6	171
	CRX0700EC	0.066	860	14.25	14.38	14.5	9.5	9.92	0.44 x 1.0	4	6	4AG	CRECH6	246
720	CRX0720AC	0.031	480	13.75	11.63	14.5	9	7.17	0.44 x 1.0	5	6	5A	CRECH6	145
750	CRX0750CC	0.037	600	14.25	12.63	14.5	9.5	8.17	0.44 x 1.0	4	6	4AH	CRECH6	143
	CRX0750DC	0.049	770	16.75	14.00	14.50	11.50	8.42	0.44 x 1.0	4	6	4AJ	CRECH6	217
	CRX0750EC	0.061	940	16.75	14.25	14.50	11.50	8.67	0.44 x 1.0	4	6	4AK	CRECH6	255
840	CRX0840AC	0.027	570	13.75	11.88	14.5	9	7.17	0.44 x 1.0	5	6	5B	CRECH6	270
900	CRX0900CC	0.031	750	14.25	14.63	14.5	9.5	8.17	0.44 x 1.0	5	7	5E	CRECH6	200
	CRX0900DC	0.041	950	17	14.88	14.5	11.5	8.42	0.44 x 1.0	5	7	5F	CRECH6	245
	CRX0900EC	0.051	1075	17	16.38	14.5	11.5	9.92	0.44 x 1.0	5	7	5G	CRECH6	290
960	CRX0960AC	0.022	675	17.75	13.75	18.5	12	7.42	0.44 x 1.0	5	7	5D	CRECH6	270
1000	CRX1000CC	0.028	785	18.75	13.5	18.5	12	7.17	0.44 x 1.0	5	7	5H	CRECH6	300
	CRX1000DC	0.037	820	18.75	14	18.5	13	8.17	0.44 x 1.0	5	7	5J	CRECH6	364
	CRX1000EC	0.046	970	21.75	16	18.5	15	8.17	0.44 x 1.0	5	7	5K	CRECH6	405
1080	CRX1080AC	0.022	675	17.75	13.75	18.5	12	7.42	0.44 x 1.0	5	7	5D	CRECH6	270
1200	CRX1200AC	0.018	710	17.75	13.25	18.5	12	6.92	0.44 x 1.0	5	7	5C	CRECH6	250
	CRX1200CC	0.023	880	18.75	13.25	18.5	13	6.67	0.44 x 1.0	5	7	5L	CRECH6	264
	CRX1200DC	0.031	1100	21.75	15	18.5	15	7.17	0.44 x 1.0	5	7	5M	CRECH6	337
	CRX1200EC	0.038	1100	21.75	16	18.5	15	8.17	0.44 x 1.0	5	7	5N	CRECH6	422

All dimensions in inches
Refer to page 18 for drawings

50 Hz

RMS Amp	Core & Coil	Inductance (mH)	Watts Loss	Width	Depth	Height	Mtg. Width	Mtg. Depth	Mtg. Slot w x d	Diagram Figure	Termination Style Ref.	Frame Size	Enclosure Kit (Optional for Field Install)	Weight (lb)
1.2	CRX01D2NC	33.94	15	4.13	2.29	5.13	2.81	1.79	0.28 x 0.38	1	1	1A	CREN1	2.5
1.6	CRX01D6NC	23.55	12	4.13	2.29	5.13	2.81	1.79	0.28 x 0.38	1	1	1A	CREN1	2.5
2	CRX0002NC	17.83	21	4.13	2.29	5.13	2.81	1.79	0.28 x 0.38	1	1	1A	CREN1	3
2.1	CRX02D1NC	10.61	19	4.13	2.29	5.13	2.81	1.79	0.28 x 0.38	1	1	1A	CREN1	2.5
	CRX02D1PC	17.83	21	4.13	2.29	5.13	2.81	1.79	0.28 x 0.38	1	1	1A	CREN1	3
3	CRX0003NC	7.058	22	4.13	2.29	5.13	2.81	1.79	0.28 x 0.38	1	1	1A	CREN1	3
	CRX0003PC	10.61	35	4.13	2.29	5.13	2.81	1.79	0.28 x 0.38	1	1	1A	CREN1	3
3.4	CRX03D4NC	10.61	35	4.13	2.29	5.13	2.81	1.79	0.28 x 0.38	1	1	1A	CREN1	3
3.7	Consult Factory													
4.5	Consult Factory													
4.8	CRX04D8NC	4.7	22	4.13	2.29	5.13	2.81	1.79	0.28 x 0.38	1	1	1A	CREN1	3
	CRX04D8PC	7.784	35	4.13	3.51	5.13	2.87	2.63	0.28 x 0.38	1	1	1B	CREN1	4.5
7.5	CRX07D5NC	5.09	40	6.5	5	6.13	4.38	4	0.28 x 0.38	1	2	1D	CREN1	11
8	CRX0008NC	2.569	36	4.13	3.51	5.38	2.87	2.63	0.28 x 0.38	1	2	1C	CREN1	5
	CRX0008PC	4.67	29	4.13	2.29	5.13	2.81	1.79	0.28 x 0.38	1	1	1A	CREN1	3
11	CRX0011NC	3.4	39	6.5	5	6.13	4.38	4	0.28 x 0.38	1	2	1D	CREN1	11
11.8	CRX11D8NC	1.66	51	6.5	5	6.13	4.38	4	0.28 x 0.38	1	2	1D	CREN1	10.5
	CRX11D8PC	2.73	57	6.5	5	6.13	4.38	4	0.28 x 0.38	1	2	1D	CREN1	11.5
14	CRX0014NC	2.73	57	6.5	5	6.13	4.38	4	0.28 x 0.38	1	2	1D	CREN1	11.5
15.6	CRX15D6NC	1.284	51	6.5	5	6.13	4.38	4	0.28 x 0.38	1	2	1D	CREN1	11
	CRX15D6PC	2.14	77	6.5	5	6.13	4.38	4	0.28 x 0.38	1	2	1D	CREN1	12
18	CRX0018NC	2.14	77	6.5	5	6.13	4.38	4	0.28 x 0.38	1	2	1D	CREN1	12
21	CRX0021NC	2.14	77	6.5	5	6.13	4.38	4	0.28 x 0.38	1	2	1D	CREN1	12
23	CRX0023NC	1.061	57	6.5	5	6.13	4.38	4	0.28 x 0.38	1	3	1D	CREN1	11.5
	CRX0023PC	1.433	80	7.12	4.69	6.38	4.8	3.27	0.38 x 0.50	2	3	2A	CREN2	12.5
25	CRX0025NC	1.769	93	7.12	4.69	6.38	4.8	3.27	0.38 x 0.50	2	3	2A	CREN2	11.5
30.5	CRX30D5NC	0.677	80	6.5	5	6.13	4.38	4	0.28 x 0.38	1	3	1D	CREN1	12.5
	CRX30D5PC	1.128	115	7.12	5.19	6.38	4.8	3.77	0.38 x 0.50	2	3	2B	CREN2	12
33	CRX0033NC	1.128	115	7.12	5.19	6.38	4.8	3.77	0.38 x 0.50	2	3	2B	CREN2	12
37.8	CRX37D8NC	0.546	68	6.5	5	6.13	4.38	4	0.28 x 0.38	1	3	1D	CREN1	12
	CRX37D8PC	0.942	105	7.12	4.69	6.38	4.8	3.27	0.38 x 0.50	2	3	2A	CREN2	12.5
45.2	CRX45D2NC	0.445	130	7.12	4.69	6.38	4.8	3.27	0.38 x 0.50	2	3	2A	CREN2	19
	CRX45D2PC	0.742	170	7.12	5.19	6.38	4.8	3.77	0.38 x 0.50	2	3	2B	CREN2	25
45	CRX0045NC	0.905	130	7.12	5.19	6.38	4.8	3.77	0.38 x 0.50	2	3	2B	CREN2	25
55	CRX0055NC	0.742	170	7.12	5.19	6.38	4.8	3.77	0.38 x 0.50	2	3	2B	CREN2	25
59.8	CRX59D8NC	0.357	110	7.25	6	5.63	4.8	3.77	0.38 x 0.50	3	4	3C	CREN2	25
	CRX59D8PC	0.595	216	9.25	6.25	7	6	3.7	0.44 x 1.0	3	4	3E	CREN2	30
65	CRX0065NC	0.595	216	9.25	6.25	7	6	3.7	0.44 x 1.0	3	4	3E	CREN2	30
74.4	CRX74D4NC	0.285	105	7.25	6	5.63	4.8	3.77	0.38 x 0.50	3	4	3C	CREN2	21
	CRX74D4PC	0.49	160	7.25	6	5.63	4.8	3.77	0.38 x 0.50	3	4	3C	CREN2	24
80	CRX0080NC	0.475	210	9.25	8	7	6	5.45	0.44 x 1.0	3	4	3L	CREN2	48
89	CRX0089NC	0.235	120	7.25	6	5.63	4.8	3.77	0.38 x 0.50	3	4	3C	CREN2	24
	CRX0089PC	0.392	170	9.25	8.25	7	6	5.7	0.44 x 1.0	3	4	3N	CREN2	49
96	CRX0096NC	0.392	170	9.25	8.25	7	6	5.7	0.44 x 1.0	3	4	3N	CREN2	49
111	Consult Factory													
	CRX0111PC	0.295	185	9.25	8.63	7	6	5.2	0.44 x 1.0	3	5	3Q	CREN2	48
130	CRX0130NC	0.3475	240	10.8	9.5	10	7.2	6.33	0.44 x 1.0	4	5	4D	CRECH4	74
147	CRX0147NC	0.145	210	9.25	7	7	6	4.08	0.44 x 1.0	3	5	3G	CREN2	32
	CRX0147PC	0.242	260	9.25	8.63	7	6	5.7	0.44 x 1.0	3	5	3R	CRECH2	32
160	CRX0160NC	0.242	260	9.25	8.63	7	6	5.7	0.44 x 1.0	3	5	3R	CRECH2	32

All dimensions in inches
Refer to page 18 for drawings

HPS Centurion® R
Line Reactor

Open Core & Coil Specification Charts Continued

50 Hz

RMS Amp	Core & Coil	Inductance (mH)	Watts Loss	Width	Depth	Height	Mtg. Width	Mtg. Depth	Mtg. Slot w x d	Diagram Figure	Termination Style Ref.	Frame Size	Enclosure Kit (Optional for Field Install)	Weight (lb)
183	CRX0183NC	0.1255	180	9.25	8.88	7	6	5.95	0.44 x 1.0	3	5	3S	CRECH2	54
	CRX0183PC	0.195	360	11.05	9.5	10	7.2	6.46	0.44 x 1.0	4	5	4M	CRECH4	87
219	CRX0219NC	0.096	225	11.05	8.25	10	7.2	5.21	0.44 x 1.0	4	5	4G	CRECH2	58
	CRX0219PC	0.16	435	13.75	11.63	12.5	9	8.7	0.44 x 1.0	4	5	4V	CRECH4	155
291	CRX0291NC	0.0795	310	13.75	9	12.5	9	6.05	0.44 x 1.0	4	5	4M	CRECH4	84
	CRX0291PC	0.123	580	13.75	11.5	14.5	9	8.67	0.44 x 1.0	4	5	4AB	CRECH5	180

All dimensions in inches
Refer to page 18 for drawings

Enclosed Specification Charts

60 Hz

RMS Amp	Enclosed	Inductance (mH)	Watts Loss	Width	Depth	Height	Mtg. Width	Mtg. Depth	Mtg. Slot w x d	Enclosure Style	Termination Style Ref.	Weight (lb)
1	CRX0001AE	27.20	21	10.00	8.00	8.13	7.00	6.50	0.188	N1	1	7.50
	CRX0001BE	47.09	12	10.00	8.00	8.13	7.00	6.50	0.188	N1	1	7.50
1.1	CRX01D1AE	20.36	12	10.00	8.00	8.13	7.00	6.50	0.188	N1	1	7.50
	CRX01D1BE	33.94	15	10.00	8.00	8.13	7.00	6.50	0.188	N1	1	7.50
1.4	CRX01D4AE	20.36	12	10.00	8.00	8.13	7.00	6.50	0.188	N1	1	7.50
	CRX01D4BE	33.94	15	10.00	8.00	8.13	7.00	6.50	0.188	N1	1	7.50
1.6	CRX01D6AE	14.91	15	10.00	8.00	8.13	7.00	6.50	0.188	N1	1	7.50
	CRX01D6BE	23.55	12	10.00	8.00	8.13	7.00	6.50	0.188	N1	1	7.50
1.8	CRX01D8AE	14.91	15	10.00	8.00	8.13	7.00	6.50	0.188	N1	1	7.50
	CRX01D8BE	27.20	21	10.00	8.00	8.13	7.00	6.50	0.188	N1	1	7.50
2	CRX0002CE	20.00	15	10.00	8.00	8.13	7.00	6.50	0.188	N1	1	8.00
2.1	CRX02D1AE	10.61	19	10.00	8.00	8.13	7.00	6.50	0.188	N1	1	7.50
	CRX02D1BE	17.83	21	10.00	8.00	8.13	7.00	6.50	0.188	N1	1	8.00
2.4	CRX02D4AE	4.67	29	10.00	8.00	8.13	7.00	6.50	0.188	N1	1	8.00
	CRX02D4BE	4.08	9	10.00	8.00	8.13	7.00	6.50	0.188	N1	1	7.50
	CRX02D4CE	7.06	22	10.00	8.00	8.13	7.00	6.50	0.188	N1	1	8.00
	CRX02D4DE	7.06	22	10.00	8.00	8.13	7.00	6.50	0.188	N1	1	8.00
2.6	CRX02D6AE	10.61	35	10.00	8.00	8.13	7.00	6.50	0.188	N1	1	8.00
	CRX02D6BE	17.83	21	10.00	8.00	8.13	7.00	6.50	0.188	N1	1	8.00
2.7	CRX02D7AE	10.61	19	10.00	8.00	8.13	7.00	6.50	0.188	N1	1	7.50
	CRX02D7BE	17.83	21	10.00	8.00	8.13	7.00	6.50	0.188	N1	1	8.00
3	CRX0003AE	7.06	22	10.00	8.00	8.13	7.00	6.50	0.188	N1	1	8.00
	CRX0003BE	10.61	35	10.00	8.00	8.13	7.00	6.50	0.188	N1	1	8.00
3.4	CRX03D4AE	7.06	22	10.00	8.00	8.13	7.00	6.50	0.188	N1	1	8.00
	CRX03D4BE	10.61	35	10.00	8.00	8.13	7.00	6.50	0.188	N1	1	8.00
3.5	CRX03D5AE	2.80	15	10.00	8.00	8.13	7.00	6.50	0.188	N1	1	7.50
	CRX03D5BE	3.55	18	10.00	8.00	8.13	7.00	6.50	0.188	N1	1	7.50
	CRX03D5CE	5.09	40	10.00	8.00	8.13	7.00	6.50	0.188	N1	2	16.00
	CRX03D5DE	4.67	29	10.00	8.00	8.13	7.00	6.50	0.188	N1	1	8.00
3.9	CRX03D9AE	7.06	22	10.00	8.00	8.13	7.00	6.50	0.188	N1	1	8.00
	CRX03D9BE	10.61	35	10.00	8.00	8.13	7.00	6.50	0.188	N1	1	8.00
4	CRX0004CE	9.10	26	10.00	8.00	8.13	7.00	6.50	0.188	N1	1	8.00
4.6	CRX04D6AE	2.13	15	10.00	8.00	8.13	7.00	6.50	0.188	N1	1	7.50
	CRX04D6BE	2.13	15	10.00	8.00	8.13	7.00	6.50	0.188	N1	1	7.50
	CRX04D6CE	3.55	18	10.00	8.00	8.13	7.00	6.50	0.188	N1	1	7.50
	CRX04D6DE	4.67	29	10.00	8.00	8.13	7.00	6.50	0.188	N1	1	8.00
4.8	CRX04D8AE	4.70	22	10.00	8.00	8.13	7.00	6.50	0.188	N1	1	8.00
	CRX04D8BE	7.78	35	10.00	8.00	8.13	7.00	6.50	0.188	N1	1	9.50
6.1	CRX06D1AE	4.67	29	10.00	8.00	8.13	7.00	6.50	0.188	N1	1	8.00
	CRX06D1BE	7.78	35	10.00	8.00	8.13	7.00	6.50	0.188	N1	1	9.50
6.6	CRX06D6AE	1.48	18	10.00	8.00	8.13	7.00	6.50	0.188	N1	1	7.50
	CRX06D6BE	1.48	18	10.00	8.00	8.13	7.00	6.50	0.188	N1	1	7.50
	CRX06D6CE	2.33	24	10.00	8.00	8.13	7.00	6.50	0.188	N1	1	8.00
	CRX06D6DE	3.06	31	10.00	8.00	8.13	7.00	6.50	0.188	N1	1	9.50
7.5	CRX07D5AE	1.31	18	10.00	8.00	8.13	7.00	6.50	0.188	N1	1	7.50
	CRX07D5BE	1.53	25	10.00	8.00	8.13	7.00	6.50	0.188	N1	2	9.50
	CRX07D5CE	2.33	24	10.00	8.00	8.13	7.00	6.50	0.188	N1	1	8.00
	CRX07D5DE	2.33	24	10.00	8.00	8.13	7.00	6.50	0.188	N1	1	8.00
7.6	CRX07D6AE	3.06	31	10.00	8.00	8.13	7.00	6.50	0.188	N1	1	9.50
	CRX07D6BE	5.09	40	10.00	8.00	8.13	7.00	6.50	0.188	N1	2	16.00
8	CRX0008CE	7.50	39	10.00	8.00	8.13	7.00	6.50	0.188	N1	2	17.00
9	CRX0009AE	3.06	31	10.00	8.00	8.13	7.00	6.50	0.188	N1	1	9.50
	CRX0009BE	5.09	40	10.00	8.00	8.13	7.00	6.50	0.188	N1	2	16.00
10.7	CRX10D7AE	0.95	30	10.00	8.00	8.13	7.00	6.50	0.188	N1	2	9.50
	CRX10D7BE	0.95	30	10.00	8.00	8.13	7.00	6.50	0.188	N1	2	9.50
	CRX10D7CE	1.64	37	10.00	8.00	8.13	7.00	6.50	0.188	N1	2	9.50
	CRX10D7DE	1.53	25	10.00	8.00	8.13	7.00	6.50	0.188	N1	2	9.50

All dimensions in inches
Refer to page 19 for drawings

HPS Centurion® R
Line Reactor

Enclosed Specification Charts Continued

60 Hz

RMS Amp	Enclosed	Inductance (mH)	Watts Loss	Width	Depth	Height	Mtg. Width	Mtg. Depth	Mtg. Slot w x d	Enclosure Style	Termination Style Ref.	Weight (lb)
11	CRX0011AE	2.57	36	10.00	8.00	8.13	7.00	6.50	0.188	N1	2	10.00
	CRX0011BE	2.10	31	10.00	8.00	8.13	7.00	6.50	0.188	N1	2	9.50
	CRX0011CE	3.40	39	10.00	8.00	8.13	7.00	6.50	0.188	N1	2	16.00
	CRX0011DE	4.28	45	10.00	8.00	8.13	7.00	6.50	0.188	N1	2	16.00
12	CRX0012CE	4.20	52	10.00	8.00	8.13	7.00	6.50	0.188	N1	2	17.00
14	CRX0014AE	1.64	37	10.00	8.00	8.13	7.00	6.50	0.188	N1	2	9.50
	CRX0014BE	2.73	57	10.00	8.00	8.13	7.00	6.50	0.188	N1	2	16.50
16.7	CRX16D7AE	0.59	30	10.00	8.00	8.13	7.00	6.50	0.188	N1	2	9.50
	CRX16D7BE	0.59	30	10.00	8.00	8.13	7.00	6.50	0.188	N1	2	9.50
	CRX16D7CE	1.06	57	10.00	8.00	8.13	7.00	6.50	0.188	N1	3	16.50
	CRX16D7DE	0.95	30	10.00	8.00	8.13	7.00	6.50	0.188	N1	2	9.50
17	CRX0017AE	1.66	51	10.00	8.00	8.13	7.00	6.50	0.188	N1	2	15.50
	CRX0017BE	2.73	57	10.00	8.00	8.13	7.00	6.50	0.188	N1	2	16.50
21	CRX0021AE	1.06	57	10.00	8.00	8.13	7.00	6.50	0.188	N1	3	16.50
	CRX0021BE	1.80	57	10.00	8.00	8.13	7.00	6.50	0.188	N1	2	16.50
22	CRX0022AE	1.28	51	10.00	8.00	8.13	7.00	6.50	0.188	N1	2	16.00
	CRX0022BE	2.14	77	10.00	8.00	8.13	7.00	6.50	0.188	N1	2	17.00
24	CRX0024AE	0.41	35	10.00	8.00	8.13	7.00	6.50	0.188	N1	2	9.50
	CRX0024BE	0.55	68	10.00	8.00	8.13	7.00	6.50	0.188	N1	3	17.00
	CRX0024CE	0.68	47	10.00	8.00	8.13	7.00	6.50	0.188	N1	2	16.00
	CRX0024DE	0.86	60	10.00	8.00	8.13	7.00	6.50	0.188	N1	3	15.50
27	CRX0027AE	1.06	57	10.00	8.00	8.13	7.00	6.50	0.188	N1	3	16.50
	CRX0027BE	0.86	60	10.00	8.00	8.13	7.00	6.50	0.188	N1	3	15.50
	CRX0027CE	1.40	57	10.00	8.00	8.13	7.00	6.50	0.188	N1	3	17.50
	CRX0027DE	1.77	93	14.00	14.00	12.13	10.00	10.50	0.188	N2	3	21.50
31	CRX0031AE	0.32	31	10.00	8.00	8.13	7.00	6.50	0.188	N1	3	15.50
	CRX0031BE	0.32	31	10.00	8.00	8.13	7.00	6.50	0.188	N1	3	15.50
	CRX0031CE	0.55	68	10.00	8.00	8.13	7.00	6.50	0.188	N1	3	17.00
	CRX0031DE	0.68	80	10.00	8.00	8.13	7.00	6.50	0.188	N1	3	17.50
32	CRX0032AE	0.88	68	10.00	8.00	8.13	7.00	6.50	0.188	N1	3	17.00
	CRX0032BE	1.43	80	14.00	14.00	12.13	10.00	10.50	0.188	N2	3	22.50
34	CRX0034AE	0.68	80	10.00	8.00	8.13	7.00	6.50	0.188	N1	3	17.50
	CRX0034BE	1.13	115	14.00	14.00	12.13	10.00	10.50	0.188	N2	3	22.00
35	CRX0035CE	1.70	93	14.00	14.00	12.13	10.00	10.50	0.188	N2	3	34.00
40	CRX0040AE	0.55	68	10.00	8.00	8.13	7.00	6.50	0.188	N1	3	17.00
	CRX0040BE	0.94	105	14.00	14.00	12.13	10.00	10.50	0.188	N2	3	22.50
41	CRX0041AE	0.68	80	10.00	8.00	8.13	7.00	6.50	0.188	N1	3	17.50
	CRX0041BE	1.13	115	14.00	14.00	12.13	10.00	10.50	0.188	N2	3	22.00
45	CRX0045CE	1.20	140	14.00	14.00	12.13	10.00	10.50	0.188	N2	3	34.00
46	CRX0046AE	0.21	40	10.00	8.00	8.13	7.00	6.50	0.188	N1	3	16.00
	CRX0046BE	0.21	40	10.00	8.00	8.13	7.00	6.50	0.188	N1	3	16.00
	CRX0046CE	0.36	60	10.00	8.00	8.13	7.00	6.50	0.188	N1	3	16.50
	CRX0046DE	0.45	130	14.00	14.00	12.13	10.00	10.50	0.188	N2	3	29.00
52	CRX0052AE	0.50	70	14.00	14.00	12.13	10.00	10.50	0.188	N2	3	25.00
	CRX0052BE	0.43	85	14.00	14.00	12.13	10.00	10.50	0.188	N2	3	27.00
	CRX0052CE	0.91	130	14.00	14.00	12.13	10.00	10.50	0.188	N2	3	35.00
	CRX0052DE	0.74	170	14.00	14.00	12.13	10.00	10.50	0.188	N2	3	35.00
59	CRX0059AE	0.17	55	10.00	8.00	8.13	7.00	6.50	0.188	N1	3	16.50
	CRX0059BE	0.22	85	14.00	14.00	12.13	10.00	10.50	0.188	N2	4	28.00
	CRX0059CE	0.30	75	14.00	14.00	12.13	10.00	10.50	0.188	N2	3	26.00
	CRX0059DE	0.36	110	14.00	14.00	12.13	10.00	10.50	0.188	N2	4	35.00
62	CRX0062AE	0.45	130	14.00	14.00	12.13	10.00	10.50	0.188	N2	3	29.00
	CRX0062BE	0.74	170	14.00	14.00	12.13	10.00	10.50	0.188	N2	3	35.00
65	CRX0065AE	0.34	110	14.00	14.00	12.13	10.00	10.50	0.188	N2	4	35.00
	CRX0065BE	0.57	120	14.00	14.00	12.13	10.00	10.50	0.188	N2	4	35.00

All dimensions in inches
Refer to page 19 for drawings

60 Hz

RMS Amp	Enclosed	Inductance (mH)	Watts Loss	Width	Depth	Height	Mtg. Width	Mtg. Depth	Mtg. Slot w x d	Enclosure Style	Termination Style Ref.	Weight (lb)
75	CRX0075AE	0.12	70	14.00	14.00	12.13	10.00	10.50	0.188	N2	4	27.00
	CRX0075BE	0.19	95	14.00	14.00	12.13	10.00	10.50	0.188	N2	4	28.00
	CRX0075CE	0.22	85	14.00	14.00	12.13	10.00	10.50	0.188	N2	4	28.00
	CRX0075DE	0.29	105	14.00	14.00	12.13	10.00	10.50	0.188	N2	4	31.00
77	CRX0077AE	0.29	105	14.00	14.00	12.13	10.00	10.50	0.188	N2	4	31.00
	CRX0077BE	0.36	110	14.00	14.00	12.13	10.00	10.50	0.188	N2	4	35.00
	CRX0077CE	0.60	216	14.00	14.00	12.13	10.00	10.50	0.188	N2	4	40.00
	CRX0077DE	0.49	160	14.00	14.00	12.13	10.00	10.50	0.188	N2	4	34.00
88	CRX0088AE	0.12	70	14.00	14.00	12.13	10.00	10.50	0.188	N2	4	27.00
	CRX0088BE	0.12	70	14.00	14.00	12.13	10.00	10.50	0.188	N2	4	27.00
	CRX0088CE	0.19	95	14.00	14.00	12.13	10.00	10.50	0.188	N2	4	28.00
	CRX0088DE	0.24	120	14.00	14.00	12.13	10.00	10.50	0.188	N2	4	34.00
96	CRX0096AE	0.24	120	14.00	14.00	12.13	10.00	10.50	0.188	N2	4	34.00
	CRX0096BE	0.39	170	14.00	14.00	12.13	10.00	10.50	0.188	N2	4	59.00
99	CRX0099AE	0.28	125	14.00	14.00	12.13	10.00	10.50	0.188	N2	4	36.00
	CRX0099BE	0.48	210	14.00	14.00	12.13	10.00	10.50	0.188	N2	4	58.00
114	CRX0114AE	0.09	70	14.00	14.00	12.13	10.00	10.50	0.188	N2	5	28.00
	CRX0114BE	0.11	140	14.00	14.00	12.13	10.00	10.50	0.188	N2	5	38.00
	CRX0114CE	0.14	110	14.00	14.00	12.13	10.00	10.50	0.188	N2	5	43.00
	CRX0114DE	0.19	190	23.50	16.50	17.90	22.40	6.50	0.56	CH2	5	83.00
124	CRX0124AE	0.19	190	23.50	16.50	17.90	22.40	6.50	0.56	CH2	5	83.00
	CRX0124BE	0.30	185	14.00	14.00	12.13	10.00	10.50	0.188	N2	5	58.00
125	CRX0125AE	0.23	160	14.00	14.00	12.13	10.00	10.50	0.188	N2	5	51.00
	CRX0125BE	0.38	250	23.50	16.50	17.90	22.40	6.50	0.56	CH2	5	98.00
143	CRX0143AE	0.07	88	14.00	14.00	12.13	10.00	10.50	0.188	N2	5	30.00
	CRX0143BE	0.10	130	14.00	14.00	12.13	10.00	10.50	0.188	N2	5	44.00
	CRX0143CE	0.11	140	14.00	14.00	12.13	10.00	10.50	0.188	N2	5	38.00
	CRX0143DE	0.11	140	14.00	14.00	12.13	10.00	10.50	0.188	N2	5	38.00
144	CRX0144AE	0.19	190	23.50	16.50	17.90	22.40	6.50	0.56	CH2	5	83.00
	CRX0144BE	0.35	240	26.10	20.50	25.90	25.00	6.50	0.56	CH4	5	114.00
156	CRX0156AE	0.15	210	14.00	14.00	12.13	10.00	10.50	0.188	N2	5	42.00
	CRX0156BE	0.24	260	23.50	16.50	17.90	22.40	6.50	0.56	CH2	5	63.00
170	CRX0170AE	0.06	100	14.00	14.00	12.13	10.00	10.50	0.188	N2	5	33.00
	CRX0170BE	0.06	100	14.00	14.00	12.13	10.00	10.50	0.188	N2	5	33.00
	CRX0170CE	0.10	130	14.00	14.00	12.13	10.00	10.50	0.188	N2	5	44.00
	CRX0170DE	0.10	130	14.00	14.00	12.13	10.00	10.50	0.188	N2	5	44.00
180	CRX0180AE	0.13	180	23.50	16.50	17.90	22.40	6.50	0.56	CH2	5	85.00
	CRX0180BE	0.21	250	23.50	16.50	17.90	22.40	6.50	0.56	CH2	5	94.00
192	CRX0192AE	0.15	200	23.50	16.50	17.90	22.40	6.50	0.56	CH2	5	84.00
	CRX0192BE	0.25	325	23.50	16.50	17.90	22.40	6.50	0.56	CH2	5	121.00
200	CRX0200CE	0.11	195	23.50	16.50	17.90	22.40	6.50	0.56	CH2	5	75.00
211	CRX0211AE	0.05	125	14.00	14.00	12.13	10.00	10.50	0.188	N2	5	34.00
	CRX0211BE	0.05	125	14.00	14.00	12.13	10.00	10.50	0.188	N2	5	34.00
	CRX0211CE	0.08	180	23.50	16.50	17.90	22.40	6.50	0.56	CH2	5	70.00
	CRX0211DE	0.10	225	23.50	16.50	17.90	22.40	6.50	0.56	CH2	5	89.00
240	CRX0240AE	0.10	225	23.50	16.50	17.90	22.40	6.50	0.56	CH2	5	89.00
	CRX0240BE	0.16	435	26.10	20.50	25.90	25.00	6.50	0.56	CH4	5	195.00
242	CRX0242AE	0.12	275	23.50	16.50	17.90	22.40	6.50	0.56	CH2	5	90.00
	CRX0242BE	0.20	360	26.10	20.50	25.90	25.00	6.50	0.56	CH4	5	127.00
273	CRX0273AE	0.04	130	23.50	16.50	17.90	22.40	6.50	0.56	CH2	5	74.00
	CRX0273BE	0.04	130	23.50	16.50	17.90	22.40	6.50	0.56	CH2	5	74.00
	CRX0273CE	0.06	200	26.10	20.50	25.90	25.00	6.50	0.56	CH4	5	107.00
	CRX0273DE	0.08	310	26.10	20.50	25.90	25.00	6.50	0.56	CH4	5	124.00

All dimensions in inches
Refer to page 19 for drawings

HPS Centurion® R
Line Reactor

Enclosed Specification Charts Continued

60 Hz

RMS Amp	Enclosed	Inductance (mH)	Watts Loss	Width	Depth	Height	Mtg. Width	Mtg. Depth	Mtg. Slot w x d	Enclosure Style	Termination Style Ref.	Weight (lb)
289	CRX0289AE	0.10	290	26.10	20.50	25.90	25.00	6.50	0.56	CH4	5	115.00
	CRX0289BE	0.16	435	26.10	20.50	25.90	25.00	6.50	0.56	CH4	5	195.00
302	CRX0302AE	0.08	310	26.10	20.50	25.90	25.00	6.50	0.56	CH4	5	124.00
	CRX0302BE	0.13	475	26.10	20.50	25.90	25.00	6.50	0.56	CH4	5	211.00
336	CRX0336AE	0.08	360	26.10	20.50	25.90	25.00	6.50	0.56	CH4	5	150.00
	CRX0336BE	0.13	475	26.10	20.50	25.90	25.00	6.50	0.56	CH4	5	211.00
343	CRX0343AE	0.03	200	26.10	20.50	25.90	25.00	6.50	0.56	CH4	5	97.00
	CRX0343BE	0.03	200	26.10	20.50	25.90	25.00	6.50	0.56	CH4	5	97.00
	CRX0343CE	0.05	230	26.10	20.50	25.90	25.00	6.50	0.56	CH4	5	106.00
	CRX0343DE	0.06	325	26.10	20.50	25.90	25.00	6.50	0.56	CH4	5	135.00
361	CRX0361AE	0.06	325	26.10	20.50	25.90	25.00	6.50	0.56	CH4	5	135.00
	CRX0361BE	0.10	445	28.10	21.30	28.90	27.00	6.50	0.56	CH5	5	203.00
382	CRX0382AE	0.07	435	28.10	21.30	28.90	27.00	6.50	0.56	CH5	5	172.00
	CRX0382BE	0.12	580	28.10	21.30	28.90	27.00	6.50	0.56	CH5	5	236.00
396	CRX0396AE	0.03	200	26.10	20.50	25.90	25.00	6.50	0.56	CH4	5	97.00
	CRX0396BE	0.03	200	26.10	20.50	25.90	25.00	6.50	0.56	CH4	5	97.00
	CRX0396CE	0.04	300	26.10	20.50	25.90	25.00	6.50	0.56	CH4	5	132.00
	CRX0396DE	0.04	300	26.10	20.50	25.90	25.00	6.50	0.56	CH4	5	132.00
412	CRX0412AE	0.07	435	28.10	21.30	28.90	27.00	6.50	0.56	CH5	5	172.00
	CRX0412BE	0.11	550	28.10	21.30	28.90	27.00	6.50	0.56	CH5	5	202.00
414	CRX0414AE	0.06	400	28.10	21.30	28.90	27.00	6.50	0.56	CH5	5	181.00
	CRX0414BE	0.08	505	28.10	21.30	28.90	27.00	6.50	0.56	CH5	5	199.00
472	CRX0472AE	0.06	400	28.10	21.30	28.90	27.00	6.50	0.56	CH5	5	181.00
	CRX0472BE	0.10	560	28.10	21.30	28.90	27.00	6.50	0.56	CH5	5	227.00
477	CRX0477AE	0.05	420	33.50	23.00	31.20	32.50	9.00	0.56	CH6	6	231.00
	CRX0477BE	0.08	600	33.50	23.00	31.20	32.50	9.00	0.56	CH6	6	306.00
515	CRX0515AE	0.05	420	33.50	23.00	31.20	32.50	9.00	0.56	CH6	6	231.00
	CRX0515BE	0.08	600	33.50	23.00	31.20	32.50	9.00	0.56	CH6	6	306.00
528	CRX0528AE	0.02	220	28.10	21.30	28.90	27.00	6.50	0.56	CH5	6	130.00
	CRX0528BE	0.02	220	28.10	21.30	28.90	27.00	6.50	0.56	CH5	6	130.00
	CRX0528CE	0.03	355	28.10	21.30	28.90	27.00	6.50	0.56	CH5	6	158.00
	CRX0528DE	0.04	495	28.10	21.30	28.90	27.00	6.50	0.56	CH5	6	189.00
590	CRX0590AE	0.04	495	28.10	21.30	28.90	27.00	6.50	0.56	CH5	6	189.00
	CRX0590BE	0.06	680	33.50	23.00	31.20	32.50	9.00	0.56	CH6	6	306.00
600	CRX0600CE	0.046	525	33.5	23	31.2	32.5	9	0.56	CH6	6	296.00
	CRX0600EE	0.077	675	33.5	23	31.2	32.5	9	0.56	CH6	6	316.00
700	CRX0700CE	0.039	615	33.5	23	31.2	32.5	9	0.56	CH6	6	257.00
	CRX0700EE	0.066	860	33.5	23	31.2	32.5	9	0.56	CH6	6	332.00
720	CRX0720AE	0.031	480	33.5	23	31.2	32.5	9	0.56	CH6	6	231.00
750	CRX0750CE	0.037	600	33.5	23	31.2	32.5	9	0.56	CH6	6	229.00
	CRX0750DE	0.049	770	33.50	23.00	31.20	32.50	9	0.56	CH6	6	303.00
	CRX0750EE	0.061	940	33.50	23.00	31.20	32.50	9	0.56	CH6	6	341.00
840	CRX0840AE	0.027	570	33.5	23	31.2	32.5	9	0.56	CH6	6	236.00
900	CRX0900CE	0.031	750	33.5	23	31.2	32.5	9	0.56	CH6	7	286.00
	CRX0900DE	0.041	950	33.5	23	31.2	32.5	9	0.56	CH6	7	331.00
	CRX0900EE	0.051	1075	33.5	23	31.2	32.5	9	0.56	CH6	7	376.00
960	CRX0960AE	0.022	675	33.5	23	31.2	32.5	9	0.56	CH6	7	356.00
1000	CRX1000CE	0.028	785	33.5	23	31.2	32.5	9	0.56	CH6	7	386.00
	CRX1000DE	0.037	820	33.5	23	31.2	32.5	9	0.56	CH6	7	450.00
	CRX1000EE	0.046	970	33.5	23	31.2	32.5	9	0.56	CH6	7	491.00
1080	CRX1080AE	0.022	675	33.5	23	31.2	32.5	9	0.56	CH6	7	356.00
1200	CRX1200AE	0.018	710	33.5	23	31.2	32.5	9	0.56	CH6	7	336.00
	CRX1200CE	0.023	880	33.5	23	31.2	32.5	9	0.56	CH6	7	350.00
	CRX1200DE	0.031	1100	33.5	23	31.2	32.5	9	0.56	CH6	7	423.00
	CRX1200EE	0.038	1100	33.5	23	31.2	32.5	9	0.56	CH6	7	508.00

All dimensions in inches
Refer to page 19 for drawings

50 Hz

RMS Amp	Enclosed	Inductance (mH)	Watts Loss	Width	Depth	Height	Mtg. Width	Mtg. Depth	Mtg. Slot w x d	Enclosure Style	Termination Style Ref.	Weight (lb)
1.2	CRX01D2NE	33.94	15	10	8	8.13	7	6.5	0.188	N1	1	7.5
1.6	CRX01D6NE	23.55	12	10	8	8.13	7	6.5	0.188	N1	1	7.5
1.6	CRX0002NE	17.83	21	10	8	8.13	7	6.5	0.188	N1	1	8
2.1	CRX02D1NE	10.61	19	10	8	8.13	7	6.5	0.188	N1	1	7.5
	CRX02D1PE	17.83	21	10	8	8.13	7	6.5	0.188	N1	1	8
3	CRX0003NE	7.06	22	10	8	8.13	7	6.5	0.188	N1	1	8
	CRX0003PE	10.61	35	10	8	8.13	7	6.5	0.188	N1	1	8
3.4	CRX03D4NE	10.61	35	10	8	8.13	7	6.5	0.188	N1	1	8
3.7	Consult Factory											
4.5	Consult Factory											
4.8	CRX04D8NE	4.70	22	10	8	8.13	7	6.5	0.188	N1	1	8
	CRX04D8PE	7.78	35	10	8	8.13	7	6.5	0.188	N1	1	9.5
7.5	CRX07D5NE	5.09	40	10	8	8.13	7	6.5	0.188	N1	2	16
8	CRX0008NE	2.57	36	10	8	8.13	7	6.5	0.188	N1	2	10
	CRX0008PE	4.67	29	10	8	8.13	7	6.5	0.188	N1	1	8
11	CRX0011NE	3.40	39	10	8	8.13	7	6.5	0.188	N1	2	16
11.8	CRX11D8NE	1.66	51	10	8	8.13	7	6.5	0.188	N1	2	15.5
	CRX11D8PE	2.73	57	10	8	8.13	7	6.5	0.188	N1	2	16.5
14	CRX0014NE	2.73	57	10	8	8.13	7	6.5	0.188	N1	2	16.5
15.6	CRX15D6NE	1.28	51	10	8	8.13	7	6.5	0.188	N1	2	16
	CRX15D6PE	2.14	77	10	8	8.13	7	6.5	0.188	N1	2	17
18	CRX0018NE	2.14	77	10	8	8.13	7	6.5	0.188	N1	2	17
21	CRX0021NE	2.14	77	10	8	8.13	7	6.5	0.188	N1	2	17
23	CRX0023NE	1.06	57	10	8	8.13	7	6.5	0.188	N1	3	16.5
	CRX0023PE	1.43	80	14	14	12.13	10	10.5	0.188	N2	3	22.5
25	CRX0025NE	1.77	93	14	14	12.13	10	10.5	0.188	N2	3	21.5
30.5	CRX30D5NE	0.68	80	10	8	8.13	7	6.5	0.188	N1	3	17.5
	CRX30D5PE	1.13	115	14	14	12.13	10	10.5	0.188	N2	3	22
33	CRX0033NE	1.13	115	14	14	12.13	10	10.5	0.188	N2	3	22
37.8	CRX37D8NE	0.55	68	10	8	8.13	7	6.5	0.188	N1	3	17
	CRX37D8PE	0.94	105	14	14	12.13	10	10.5	0.188	N2	3	22.5
45.2	CRX45D2NE	0.45	130	14	14	12.13	10	10.5	0.188	N2	3	29
	CRX45D2PE	0.74	170	14	14	12.13	10	10.5	0.188	N2	3	35
45	CRX0045NE	0.91	130	14	14	12.13	10	10.5	0.188	N2	3	35
55	CRX0055NE	0.74	170	14	14	12.13	10	10.5	0.188	N2	3	35
59.8	CRX59D8NE	0.36	110	14	14	12.13	10	10.5	0.188	N2	4	35
	CRX59D8PE	0.60	216	14	14	12.13	10	10.5	0.188	N2	4	40
65	CRX0065NE	0.60	216	14	14	12.13	10	10.5	0.188	N2	4	40
74.4	CRX74D4NE	0.29	105	14	14	12.13	10	10.5	0.188	N2	4	31
	CRX74D4PE	0.49	160	14	14	12.13	10	10.5	0.188	N2	4	34
80	CRX0080NE	0.48	210	14	14	12.13	10	10.5	0.188	N2	4	58
89	CRX0089NE	0.24	120	14	14	12.13	10	10.5	0.188	N2	4	34
	CRX0089PE	0.39	170	14	14	12.13	10	10.5	0.188	N2	4	59
96	CRX0096NE	0.39	170	14	14	12.13	10	10.5	0.188	N2	4	59
111	Consult Factory											
	CRX0111PE	0.30	185	14	14	12.13	10	10.5	0.188	N2	5	58
130	CRX0130NE	0.35	240	26.1	20.5	25.9	25	6.5	0.56	CH4	5	114
147	CRX0147NE	0.15	210	14	14	12.13	10	10.5	0.188	N2	5	42
	CRX0147PE	0.24	260	23.5	16.5	17.9	22.4	6.5	0.56	CH2	5	63
160	CRX0160NE	0.24	260	23.5	16.5	17.9	22.4	6.5	0.56	CH2	5	63
183	CRX0183NE	0.13	180	23.5	16.5	17.9	22.4	6.5	0.56	CH2	5	85
	CRX0183PE	0.20	360	26.1	20.5	25.9	25	6.5	0.56	CH4	5	127
219	CRX0219NE	0.10	225	23.5	16.5	17.9	22.4	6.5	0.56	CH2	5	89
	CRX0219PE	0.16	435	26.1	20.5	25.9	25	6.5	0.56	CH4	5	195
291	CRX0291NE	0.08	310	26.1	20.5	25.9	25	6.5	0.56	CH4	5	124
	CRX0291PE	0.12	580	28.1	21.3	28.9	27	6.5	0.56	CH5	5	236

All dimensions in inches
Refer to page 19 for drawings

HPS Centurion® R
Line Reactor

Diagrams

Figure #1

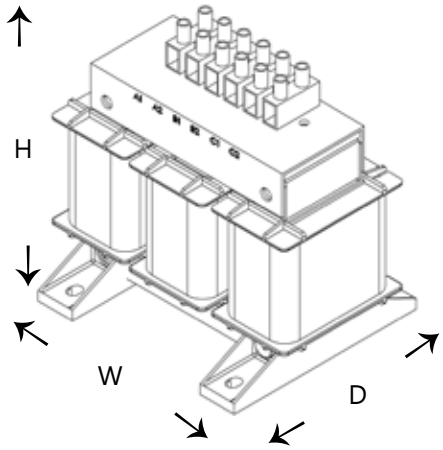

Mounting hardware
(not included)
4 pcs - 1/4 in. bolts
4 pcs - 1/4 in. nuts
8 pcs - 1/4 in. flat washers
4 pcs - 1/4 in. lock washers
Max. tightening torque: 5.5 ft-lb

Figure #2

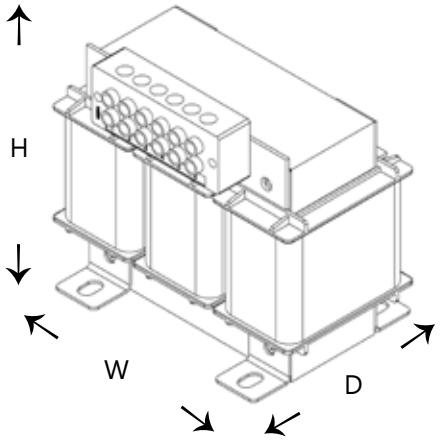

Mounting hardware
(not included)
4 pcs - 5/16 in. bolts
4 pcs - 5/16 in. nuts
8 pcs - 5/16 in. flat washers
4 pcs - 5/16 in. lock washers
Max. tightening torque: 18 ft-lb

Figure #3

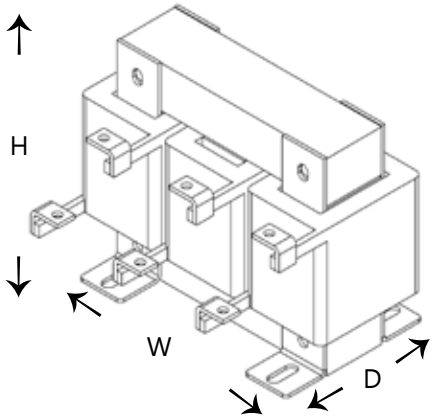

Mounting hardware (not included)	**.38x.5 slot**	**.44x1.0 slot**
4 pcs bolts	5/16 in.	3/8 in.
4 pcs nuts	5/16 in.	3/8 in.
8 pcs flat washers	5/16 in.	3/8 in.
4 pcs lock washers	5/16 in.	3/8 in.
Max. tightening torque	18 ft-lb	28 ft-lb

Figure #4

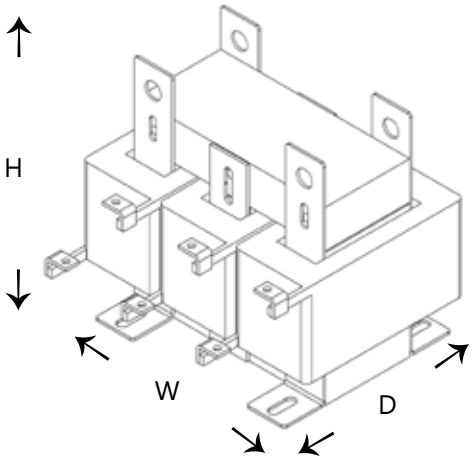

Mounting hardware
(not included)
4 pcs - 3/8 in. bolts
4 pcs - 3/8 in. nuts
8 pcs - 3/8 in. flat washers
4 pcs - 3/8 in. lock washers
Max. tightening torque: 28 ft-lb

Figure #5

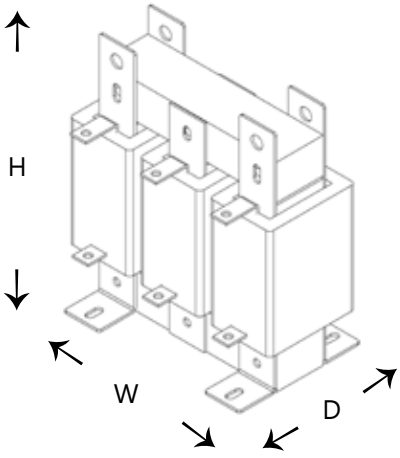

Mounting hardware
(not included)
4 pcs - 3/8 in. bolts
4 pcs - 3/8 in. nuts
8 pcs - 3/8 in. flat washers
4 pcs - 3/8 in. lock washers
Max. tightening torque: 28 ft-lb

Enclosure Styles

N1

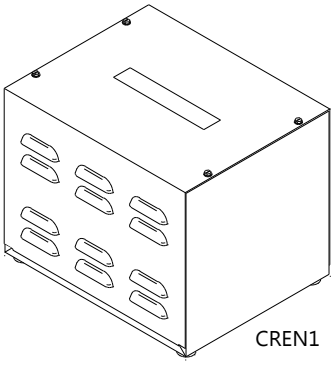

CREN1

N2

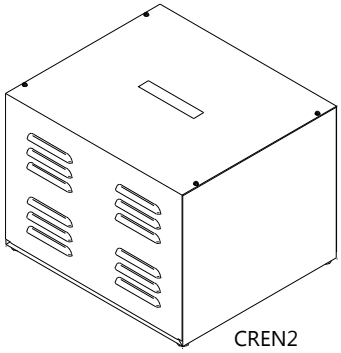

CREN2

CH2

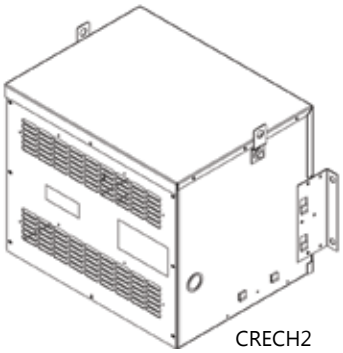

CRECH2

CH4

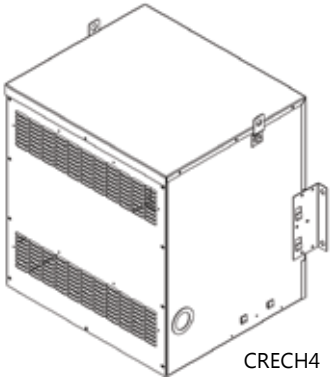

CRECH4

CH5

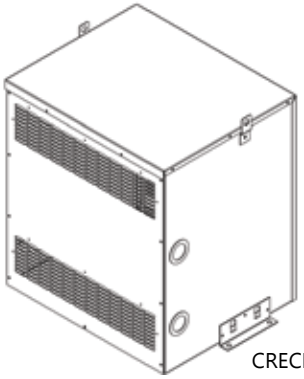

CRECH5

CH6

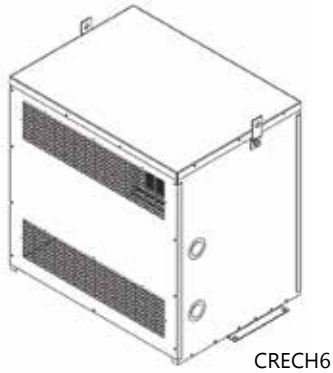

CRECH6

Termination Style Reference

Style Number	Size	Max. Amps	Max. Torque
1	18-14 AWG	9	5 in-lbs
2	13-10 AWG	27	11 in-lbs
3	4-14 AWG	65	20 in-lbs
4	0.28"	110	10 ft-lbs
5	0.44"	472	28 ft-lbs
6	0.56"	840	70 ft-lbs
7	4 x 0.53"	1200	70 ft-lbs

Style #1, 2

Use applicable terminal block

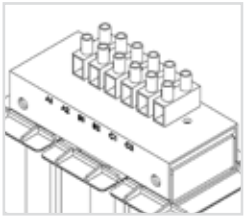

Style #4, 5, 6

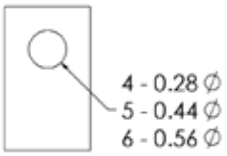

Style #3

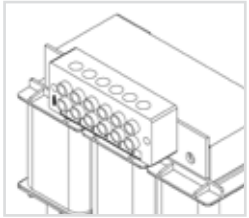

Style #7

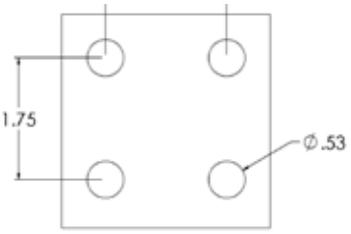


CANADA


UNITED STATES


ASIA

CANADA
Hammond Power Solutions
595 Southgate Drive
Guelph, Ontario N1G 3W6
Tel: (519) 822-2441
Fax: (519) 822-9701
Toll Free: 1-888-798-8882
sales@hammondpowersolutions.com

UNITED STATES
Hammond Power Solutions
1100 Lake Street
Baraboo, Wisconsin 53913-2866
Tel: (608) 356-3921
Fax: (608) 355-7623
Toll Free: 1-866-705-4684
sales@hammondpowersolutions.com

ASIA
Hammond Power Solutions Pvt. Ltd.
D. No. 5-2/222/IP/B, II-Floor, Icon Plaza
Allwyn X-Roads, Miyapur, Hyderabad 500 049
Tel: +91-994-995-0009
marketing-india@hammondpowersolutions.com

EMEA (Sales Office)
Hammond Power Solutions SpA
Tel: +49 (152) 08800468
sales-emea@hammondpowersolutions.com

Distributed by:

CENTLIN14
November 2019