ALED5S78/BL



High output LED pole top area light with IES type V square distribution. Wide and uniform 360 degree pattern ideal for large outdoor areas such as parking lots, corporate parks, and retail settings.

Color: Bronze

Weight: 33.1 lbs

Project:	Type:
Prepared By:	**Date:**

Driver Info

Type	Constant Current
120V	0.56A
208V	0.34A
240V	0.33A
277V	0.26A
Input Watts	65.4W

LED Info

Watts	78W
Color Temp	5000K (Cool)
Color Accuracy	73 CRI
L70 Lifespan	100,000 Hours
Lumens	9,578 lm
Efficacy	146.5 lm/W

Technical Specifications

Compliance

UL Listed:
Suitable for wet locations

IESNA LM-79 & LM-80 Testing:
RAB LED luminaires and LED components have been tested by an independent laboratory in accordance with IESNA LM-79 and LM-80.

DLC Listed:
This product is listed by Design Lights Consortium (DLC) as an ultra-efficient premium product that qualifies for the highest tier of rebates from DLC Member Utilities. Designed to meet DLC 5.1 requirements.
DLC Product Code: PJJZ9WJW

LED Characteristics

LEDs:
Long-life, high-efficacy, surface-mount LEDs

Color Consistency:
7-step MacAdam Ellipse binning to achieve consistent fixture-to-fixture color

Color Stability:
LED color temperature is warrantied to shift no more than 200K in color temperature over a 5-year period

Color Uniformity:
RAB's range of Correlated Color Temperature follows the guidelines of the American National Standard for Specifications for the Chromaticity of Solid State Lighting (SSL) Products, ANSI C78.377-2017.

Performance

Lifespan:
100,000-Hour LED lifespan based on IES LM-80 results and TM-21 calculations

Wattage Equivalency:
Equivalent to 250W Metal Halide

Optical

BUG Rating:
B3 U1 G2

Optics:
Square, Type V distribution

Construction

Cold Weather Starting:
The minimum starting temperature is -40°C (-40°F)

Maximum Ambient Temperature:
Suitable for use in up to 40°C (104°F)

Thermal Management:
Superior thermal management with external air-flow fins

Effective Projected Area:
EPA = 0.7

Lens:
Clear polycarbonate lens

Reflector:
Vacuum-metalized polycarbonate

Gaskets:
High-temperature silicone

Finish:
Formulated for high durability and long-lasting color

Green Technology:
Mercury and UV free. RoHS-compliant components.

Installation

Mounting:
Tenon for 2 3/8" or 3" OD post or pole-top adaptor

Copyright © 2025 RAB Lighting All Rights Reserved Note: Specifications are subject to change at any time without notice

Technical Specifications (continued)

Electrical

Driver:
Constant Current, Class 2 with 4kV surge protection, 120-277VAC, 50/60 Hz, 120V: 0.56A, 208V: 0.34A, 240V: 0.33A, 277V: 0.26A

THD:
5.78% at 120V, 9.27% at 277V

Power Factor:
99.5% at 120V, 91.6% at 277V

ALED5S78 with Bi-Level:
Allows 33%-66%-100% output modes

Other

Patents:
The designs of the ALED5S are protected by patents pending in US, Canada, China, Taiwan and Mexico

BAA Compliance:
Click here for BAA compliance.

Warranty:
RAB warrants that our LED products will be free from defects in materials and workmanship for a period of five (5) years from the date of delivery to the end user, including coverage of light output, color stability, driver performance and fixture finish. RAB's warranty is subject to all terms and conditions found at rablighting.com/warranty.

Dimensions

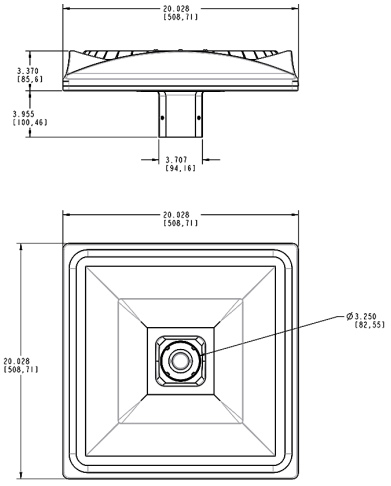

Features

- Precision optics deliver uniform, optimal light distribution
- Perfect for parking lots and pathways
- 100,000-Hour LED lifespan

Copyright © 2025 RAB Lighting All Rights Reserved Note: Specifications are subject to change at any time without notice

Ordering Matrix

Family	Wattage	Color Temp	Finish	Driver Options	Sensor Options	Other Options
ALED5S	78			/BL		
	150 = 150W **78 =** 78W	**Blank =** 5000K Cool **N =** 4000K Neutral **Y =** 3000K Warm	**Blank =** Bronze **W =** White	**/D10 =** 120-277V, 0-10V Dimming **/480/D10 =** 480V, 0-10V Dimming **/BL =** Bi-Level	**Blank =** No Option **/7PR/WS2 =** 7-Pin Receptacle w/Motion Sensor **/7PR =** 7-Pin Receptacle **/5PR =** 5 Pin Receptacle **/LC =** Lightcloud **/WS2 =** Motion Sensor/Photocell **/PCT4 =** 480V Twistlock Photocell **/PCT =** 120-277V Twistlock Photocell	**Blank =** Standard **USA =** BAA Compliant

Copyright © 2025 RAB Lighting All Rights Reserved Note: Specifications are subject to change at any time without notice