INSTRUCTIONS
BOLLARD 12/18/24W INSTALLATION

RAB Lighting is committed to creating high-quality, affordable, well-designed and energy-efficient LED lighting and controls that make it easy for electricians to install and end users to save energy. We'd love to hear your comments. Please call the Marketing Department at 888-RAB-1000 or email: marketing@rablighting.com



BLEDR - ROUND



BLED - SQUARE



BDLEDR - ROUND DOME

IMPORTANT

READ CAREFULLY BEFORE INSTALLING FIXTURE. RETAIN THESE INSTRUCTIONS FOR FUTURE REFERENCE.
RAB fixtures must be wired in accordance with the National Electrical Code and all applicable local codes. Proper grounding is required for safety. THIS PRODUCT MUST BE INSTALLED IN ACCORDANCE WITH THE APPLICABLE INSTALLATION CODE BY A PERSON FAMILIAR WITH THE CONSTRUCTION AND OPERATION OF THE PRODUCT AND THE HAZARDS INVOLVED.
WARNING: Make certain power is OFF before installing or maintaining fixture. No user serviceable parts inside.
WARNING: Must be installed on a level surface, above grade.

LOCATION

CAUTION: Before mounting, make sure to align Bollard Base in the orientation that will result in the desired Bollard Fixture orientation.

1. The **Bollard** should be mounted to a firm level surface.
2. **Anchor Bolts** may be used in new concrete installations. Use the template provided.
3. For all other applications use anchors suitable for the mounting surface.
4. Mounting base must be above grade, minimum recommended is 1 inch.

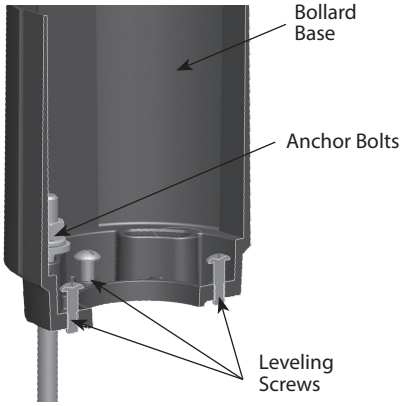

ANCHOR BOLTS INSTALLATION

CAUTION: Install according to all applicable local codes.

Install four **Anchor Bolts** in concrete foundation *(by others)* using the template provided. **Bollard Base** may also be used as the template. Bolt threads should protrude from concrete.

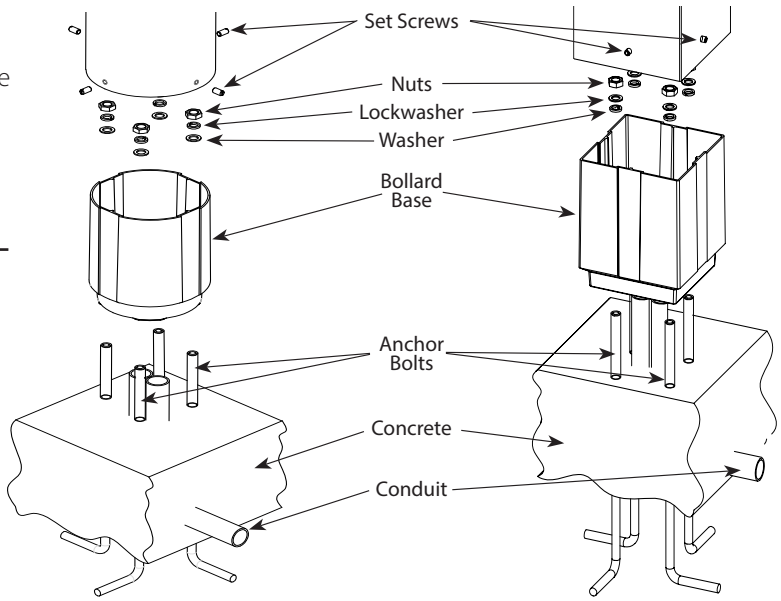

BOLLARD BASE

1. Place the **Bollard Base** over **Anchor Bolts**.
2. Loosely tighten the **Washers**, **Lock Washers** and **Nuts** provided. Level the **Bollard Base** with provided **Leveling Screws**. Tighten all nuts and screws.
3. Be sure supply leads extend far enough to make fixture connections. Make the wiring connections with UL-approved connectors.
4. Slide the **Bollard** over on **Bollard Base** lined up with the grooves. Be sure to check the LED position on the **Bollard**.
5. Use the four **Set Screws** to secure the **Bollard** to the **Bollard Base**.

INSTRUCTIONS
BOLLARD 12/18/24W INSTALLATION

RAB Lighting is committed to creating high-quality, affordable, well-designed and energy-efficient LED lighting and controls that make it easy for electricians to install and end users to save energy. We'd love to hear your comments. Please call the Marketing Department at 888-RAB-1000 or email: marketing@rablighting.com

ON-OFF WIRING

Universal voltage driver permits operation at 120V thru 277V, 50 or 60 Hz. Units ordered with (/480V) suffix are 480V, 60Hz. For non-dimming, follow the wiring directions in **Fig. 1.**

1. Connect the black fixture lead to the LINE supply lead.
2. Connect the white fixture lead to the COMMON supply lead.
3. Connect the GROUND wire from fixture to supply ground.

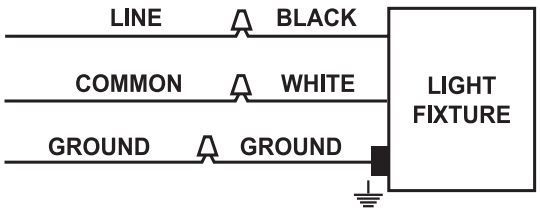

Fig: 1

0-10V DIMMABLE WIRING

Universal voltage driver permits operation at 120V thru 277V, 50 or 60 Hz. For 0-10V Dimming, follow the wiring directions in **Fig. 2.**

1. Connect the black fixture lead to the LINE supply lead.
2. Connect the white fixture lead to the COMMON supply lead.
3. Connect the GROUND wire from fixture to supply ground. Do NOT connect the GROUND of the dimming fixture to the output.
4. Connect the purple fixture lead to the (V+) DIM lead.
5. Connect the gray fixture lead to the (V-) DIM lead.
6. Cap the yellow fixture lead, if present. Do NOT connect.

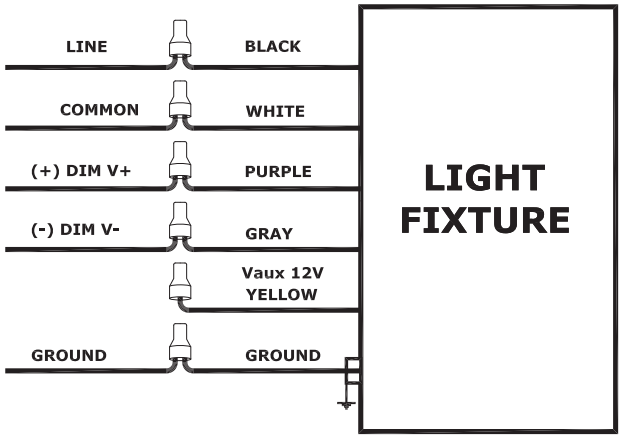

Fig: 2

ACCESSORIES *(sold separately)*

BOLBASE24 RETRO Base BLED24 Retro Kit (Bronze)
BOLBASE24W RETRO Base BLED24W Retro Kit (White)

TROUBLESHOOTING

1. Check that the line voltage at the fixture is correct. Refer to wiring directions.
2. Is the fixture grounded properly?

CLEANING & MAINTENANCE

CAUTION: Be sure fixture temperature is cool enough to touch. Do not clean or maintain while fixture is energized.

1. Clean lens with non-abrasive cleaning solution.
2. Do not open fixture to clean the LED. Do not touch the LED.

Note: *These instructions do not cover all details or variations in equipment nor do they provide for every possible situation during installation, operation or maintenance.*

INSTRUCTIONS
BOLLARD 12/18/24W INSTALLATION

RAB Lighting is committed to creating high-quality, affordable, well-designed and energy-efficient LED lighting and controls that make it easy for electricians to install and end users to save energy. We'd love to hear your comments. Please call the Marketing Department at 888-RAB-1000 or email: marketing@rablighting.com

BATTERY BACKUP MODELS

(Battery Backup option is only offered for the 24W models)

WIRING

CAUTION: FOR BATTERY BACKUP FIXTURE. Voltage can be present in **BATTERY.** To prevent high voltage from being present on output leads, Inventer connector must be open. Do not join **BATTERY** connector until Installation is complete and AC power is supplied to the emergency driver. **(Fig. 3)**
NOTE: Make sure that the necessary branch circuit wiring is available. An UNSWITCHED AC source of power is required. The emergency driver must be fed from the same branch circuit as the LED driver.
CAUTION: Do not use any supply voltage other than 120-277V 50/60 HZ.

1. Connect **UNSWITCHED HOT** fixture lead to **HOT AC** supply line.
2. If using an **UNSWITCHED** circuit, connect **UNSWITCHED** and **SWITCHED** lines together.
3. If using a **SWITCHED** circuit, connect **SWITCHED HOT** AC fixture lead to the external
4. Connect the gray fixture lead to the (V-) DIM lead.
5. For 0-10V Dimming, connect **DIM** (+) and **DIM** (-) to the supply ground. Do not connect **GROUND** to the output leads.
6. All unused lead must be capped and insulated.
7. After installation is complete, supply AC power to the fixture and connect the **BATTERY.**
8. When power is on, the fixture should be on and the Charging Indictaor Light should illuminate to indicate the battery is charging.
9. Once the BATTERY has charged fcor at lease one hour, a short duraction test may be performed by pressing the test button.
10. After the battery has charged for 24 hours, a long duration test can be performed by shutting power to the fixture.

OPERATION

1. When AC power is applied, the charging indicator light is illuminated, indicating that the **BATTERY** is being charged.
2. When AC power fails , the standby power automatically switches to emergency mode (interal battery), operating at reduced illumination for a minimum of 90 minutes.
3. When AC power is restored, the emergency driver automatically returns to charging mode.

MAINTENANCE

Although no routine maintenance is required to keep the emergency driver functional, it should be checked periodically to enure that it is working. The following schedule is recommended:

1. Visually inspect the charging indicator light monthly. It should be illuminated
2. Test the emergency operation of the fixture at 30-day intervals for a minimum of 30 seconds.
3. Conduct a 90-minute discharge test once a year. Fixture would operate at reduced illumination for a minimum of 90 minutes.

TROUBLESHOOTING

1. Is the fixture grounded properly?
2. If the charging indicator light does not illuminate after pressing the test button, check if battery is connected properly.

FIG. 3

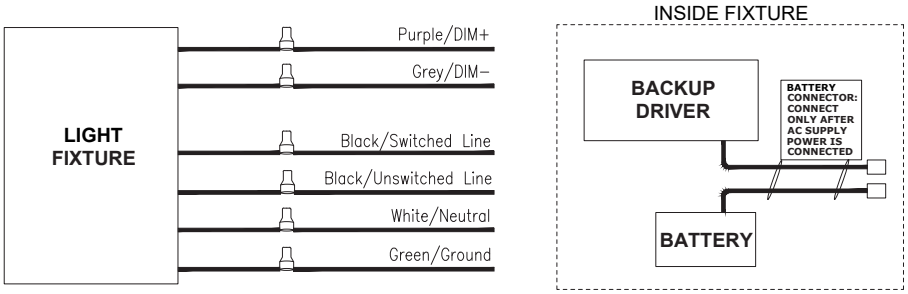

Note: These instructions do not cover all details or variations in equipment nor do they provide for every possible situation during installation, operation or maintenance.

INSTRUCTIONS
BOLLARD 12/18/24W INSTALLATION

RAB Lighting is committed to creating high-quality, affordable, well-designed and energy-efficient LED lighting and controls that make it easy for electricians to install and end users to save energy. We'd love to hear your comments. Please call the Marketing Department at 888-RAB-1000 or email: marketing@rablighting.com

ANCHOR BOLT TEMPLATE FOR BLED BOLLARD

Drawing not to scale. Use the actual mounting plate as your template.

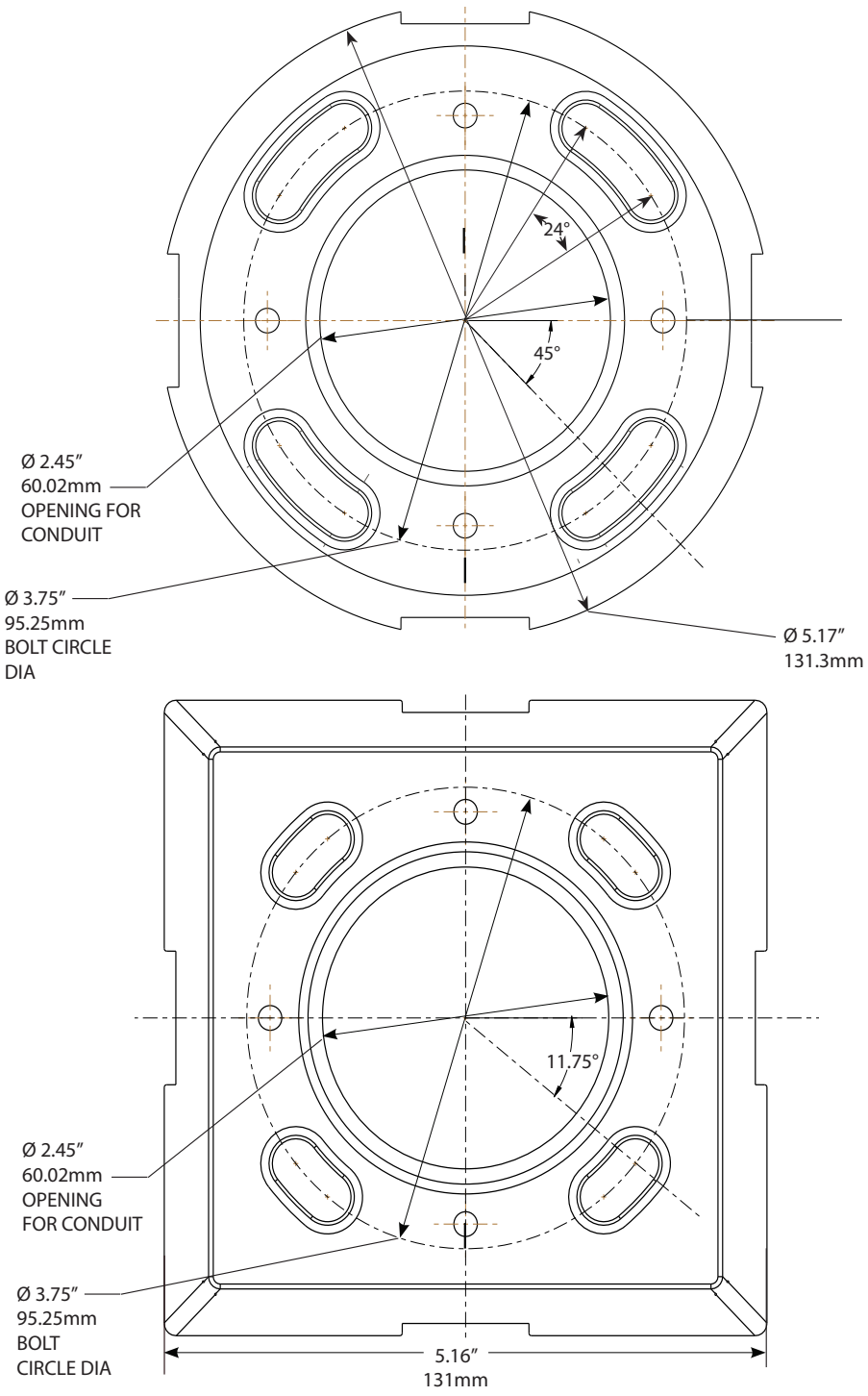

© 2020 RAB LIGHTING Inc.
Northvale, New Jersey 07647 USA

Easy Answers

rablighting.com
Visit our website for product info

Tech Help Line
Call our experts: 888 722-1000

e-mail
Answered promptly - sales@rablighting.com

Free Lighting Layouts
Answered online or by request

BOLLARD-IN-0220
73106-RAB

RAB WARRANTY: *RAB's warranty is subject to all terms and conditions found at rablighting.com/warranty.*