BOLBASE INSTALLATION INSTRUCTIONS

Thank you for buying RAB lighting fixtures. Our goal is to design the best quality products to get the job done right. We'd like to hear your comments. Call the Marketing Department at 888-RAB-1000, or email: marketing@rabweb.com

IMPORTANT

READ CAREFULLY BEFORE INSTALLING FIXTURE. RETAIN THESE INSTRUCTIONS FOR FUTURE REFERENCE.
RAB fixtures must be wired in accordance with the National Electrical Code and all applicable local codes. Proper grounding is required for safety. THIS PRODUCT MUST BE INSTALLED IN ACCORDANCE WITH THE APPLICABLE INSTALLATION CODE BY A PERSON FAMILIAR WITH THE CONSTRUCTION AND OPERATION OF THE PRODUCT AND THE HAZARDS INVOLVED.

WARNING: Make certain power is OFF before installing or maintaining fixture.

BOLBASE

Bollard Base for BLED5, BLED10, BLED13's (Bollards with Fixtures sold separately). Supplied with Anchor Bolts with nuts, washers and lock washers and Base Plate.

1. Place **Anchor Bolts** in concrete according to the template. Bolt projection should be no more than 1 1/2".
   CAUTION: Be sure orientation of Anchor Bolts is parallel to the area being illuminated.
   CAUTION: Be sure the conduit is within 3 1/2" center diameter.

2. Place the **Base Plate** over the **Anchor Bolts**. Add nuts, washers and lock washers to **Anchor Bolts.**

3. Use the four **Leveling Bolts** to set and secure the **Base Plate.**

4. Level the **Base Plate** by adjusting the **Leveling Bolts.** Tighten Anchor Bolts nuts.

5. Place **Bollard Base** over the **Base Plate** and tighten the four **Set Screws**.

6. Place **Bollard** over **Bollard Base** and tighten **Bollard Screws**.

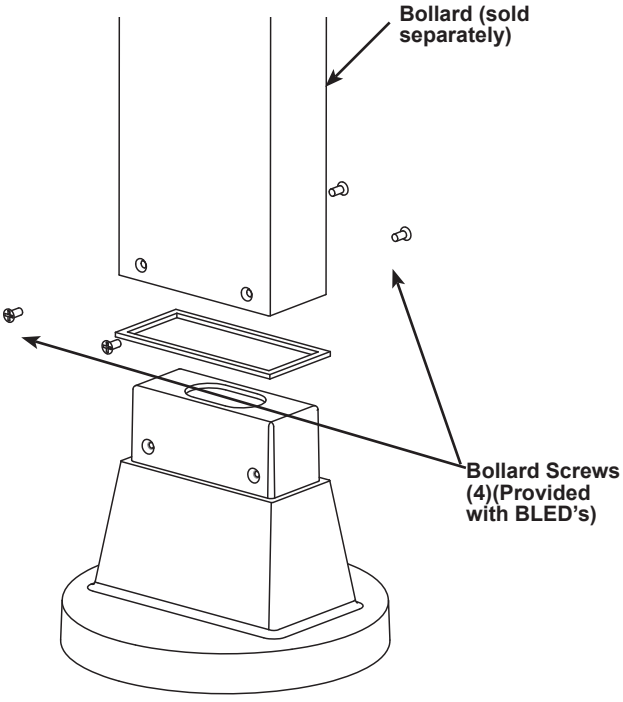

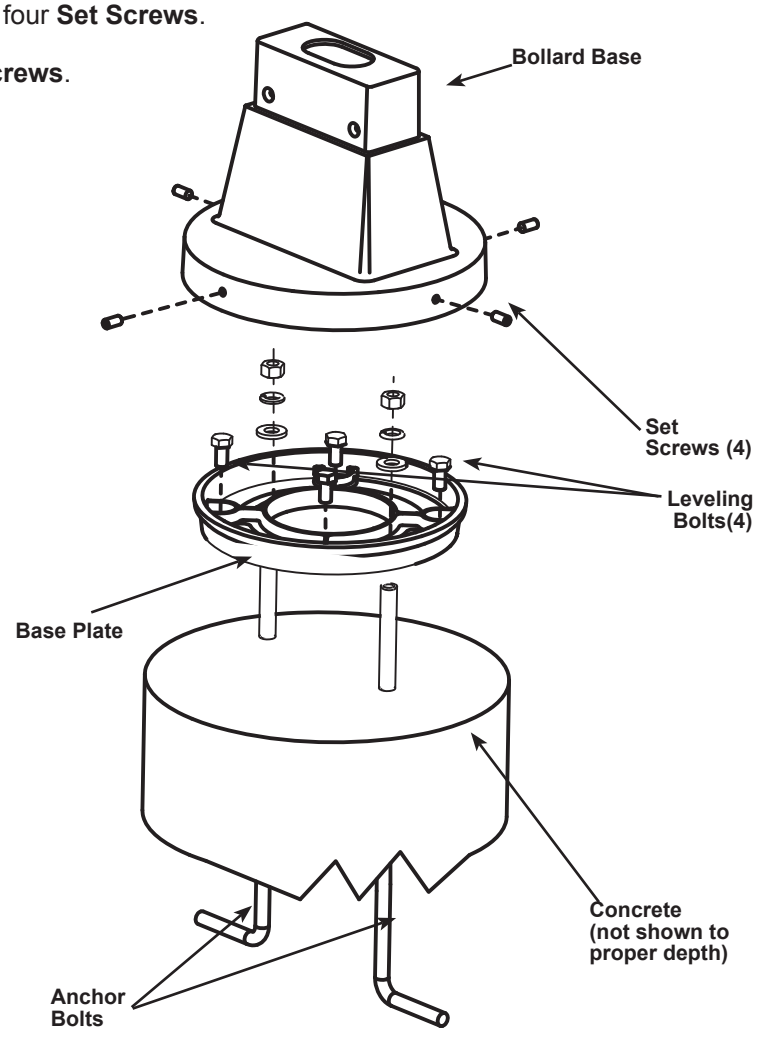

Note: These instructions do not cover all details or variations in equipment nor do they provide for every possible situation during installation, operation or maintenance.

BOLBASE INSTALLATION INSTRUCTIONS

BASE PLATE TEMPLATE

Template as shown is Actual Size when printed on 8 1/2 x 11 paper. Otherwise refer to dimensions shown.

CAUTION: Before drilling and mounting, make sure to align Bollard Base in the orientation that will result in the desired Bollard Fixture orientation.

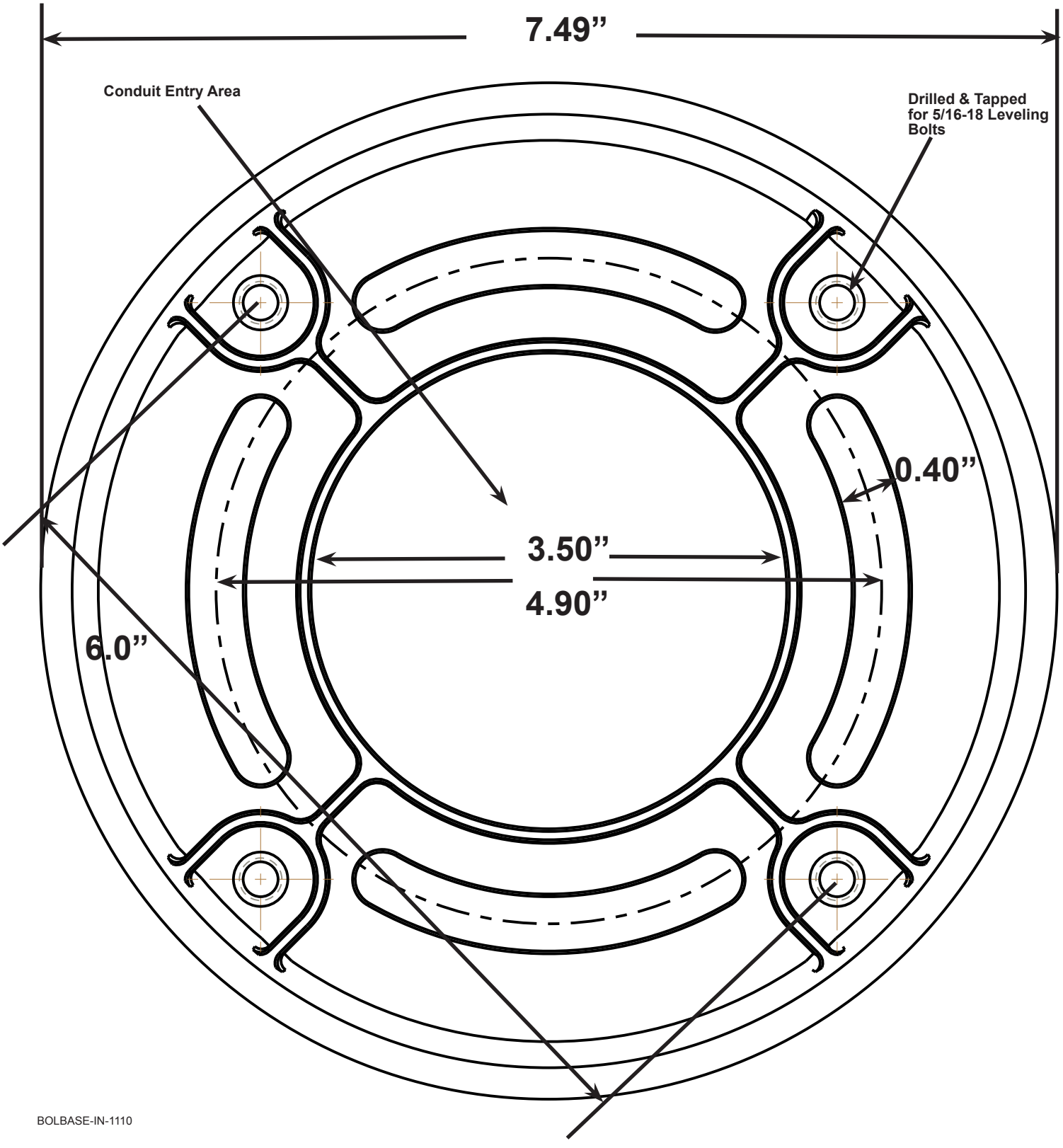

BOLBASE RETRO INSTALLATION INSTRUCTIONS

Thank you for buying RAB lighting fixtures. Our goal is to design the best quality products to get the job done right. We'd like to hear your comments. Call the Marketing Department at 888-RAB-1000, or email: marketing@rabweb.com

IMPORTANT

READ CAREFULLY BEFORE INSTALLING FIXTURE. RETAIN THESE INSTRUCTIONS FOR FUTURE REFERENCE.
RAB fixtures must be wired in accordance with the National Electrical Code and all applicable local codes. Proper grounding is required for safety. THIS PRODUCT MUST BE INSTALLED IN ACCORDANCE WITH THE APPLICABLE INSTALLATION CODE BY A PERSON FAMILIAR WITH THE CONSTRUCTION AND OPERATION OF THE PRODUCT AND THE HAZARDS INVOLVED.

WARNING: Make certain power is OFF before installing or maintaining fixture. No user serviceable parts inside.

BOLBASE RETRO

Retrofit Bollard Base for BLED5, BLED10, BLED13's (Bollards with Fixtures sold separately) for retrofit application for existing concrete or base. No anchor bolts or internal hardware is provided. Internal and external dimensions shown on page 2. Drilling template shown on page 3.

1. Drill **Bollard Base Retro** in the drilling location shown in the detailed dimensional drawings. Place the **Bollard Base Retro** on the mounting surface covering any existing obsolete hardware.
   CAUTION: Before drilling and mounting, make sure to align Bollard Base Retro in the orientation that will result in the desired Bollard Fixture orientation.

2. Set anchors(not provided) and mount through the top of the **Bollard Base Retro** at the **Drilling Location** to surface with appropriate hardware.

3. Place **Bollard** over **Bollard Base Retro** with bollard gasket and secure with four **Bollard Screws**.

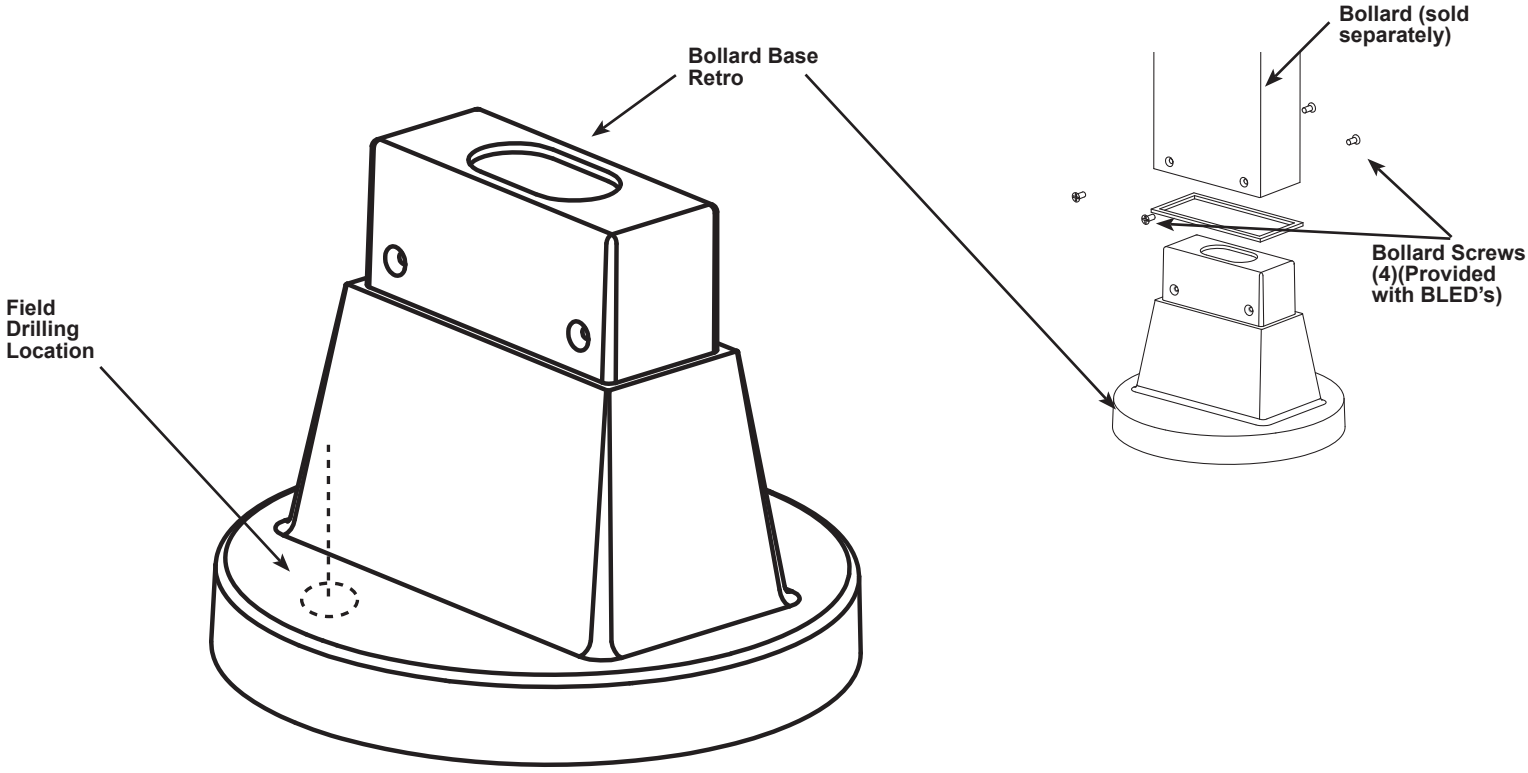

BOLBASE RETRO INSTALLATION INSTRUCTIONS

BOLBASE RETRO

Detailed Dimension Drawings shown below.

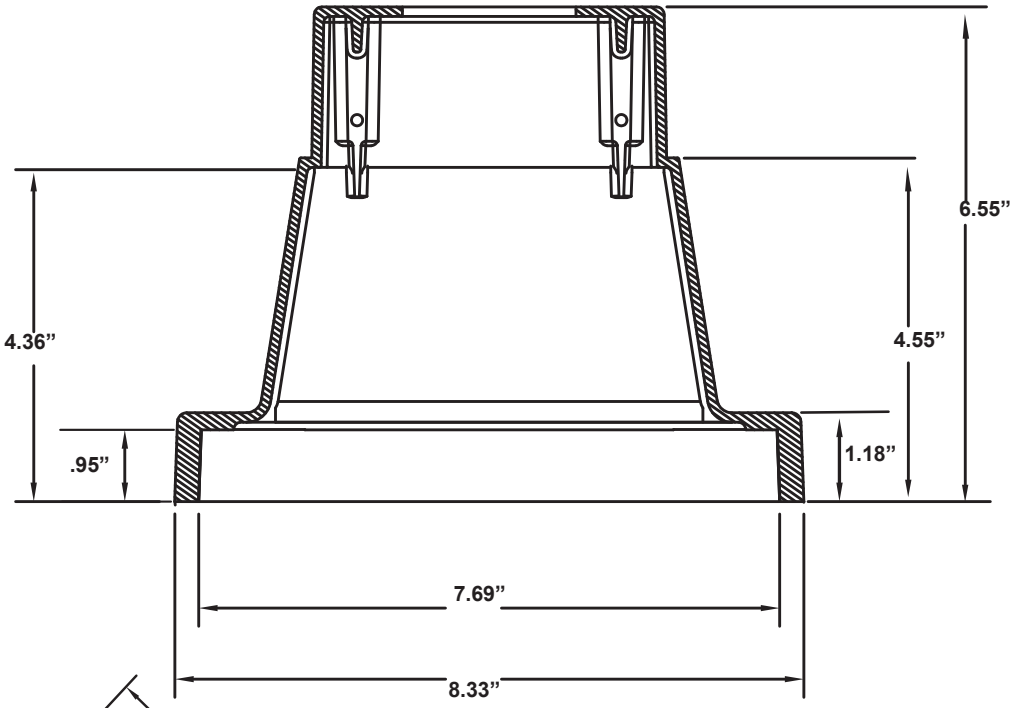

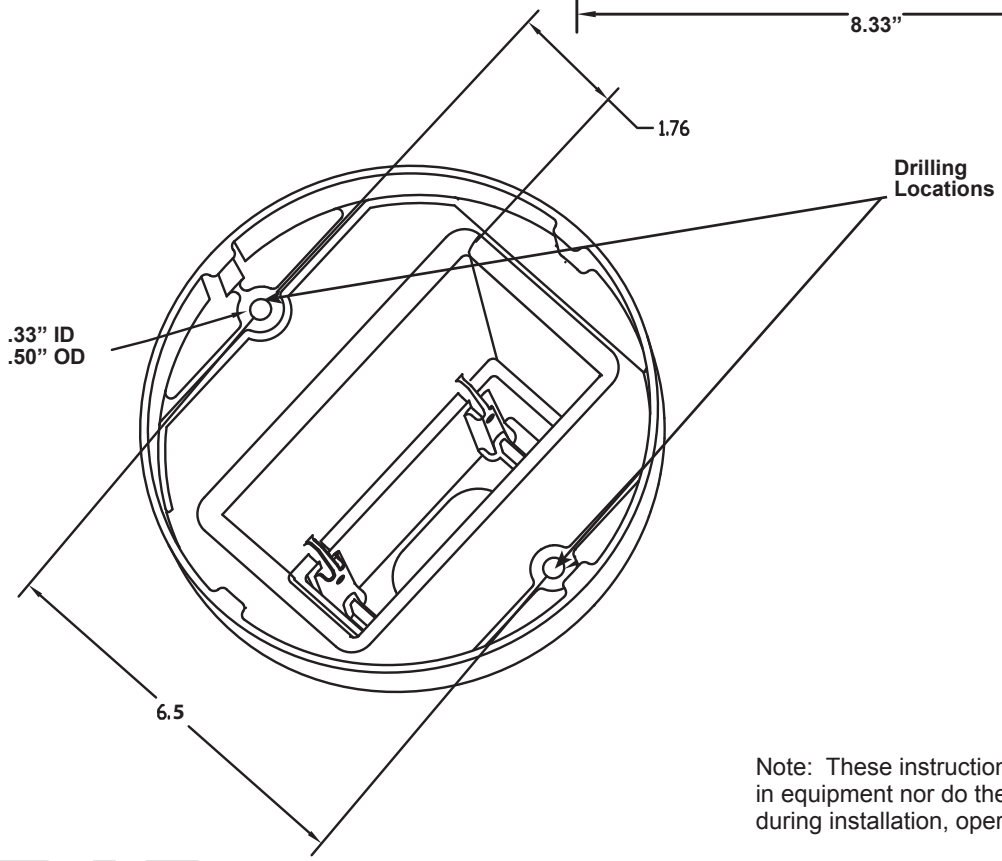

Note: These instructions do not cover all details or variations in equipment nor do they provide for every possible situation during installation, operation or maintenance.

© 2011 RAB LIGHTING Inc.
Northvale, New Jersey 07647 USA

Easy Installation & Product Help

Tech Help Line	*Toll Free Fax*	*rabweb.com*	*e-mail*
Call our experts	Send a fax to RAB	Visit our website	Answered promptly
888 RAB-1000	888 RAB-1232	for product info	sales@rabweb.com

BOLBASE RETRO INSTALLATION INSTRUCTIONS

BASE PLATE TEMPLATE

Template as shown is Actual Size when printed on 8 1/2 x 11 paper. Otherwise refer to dimensions shown.

CAUTION: Before drilling and mounting, make sure to align Bollard Base Retro in the orientation that will result in the desired Bollard Fixture orientation.

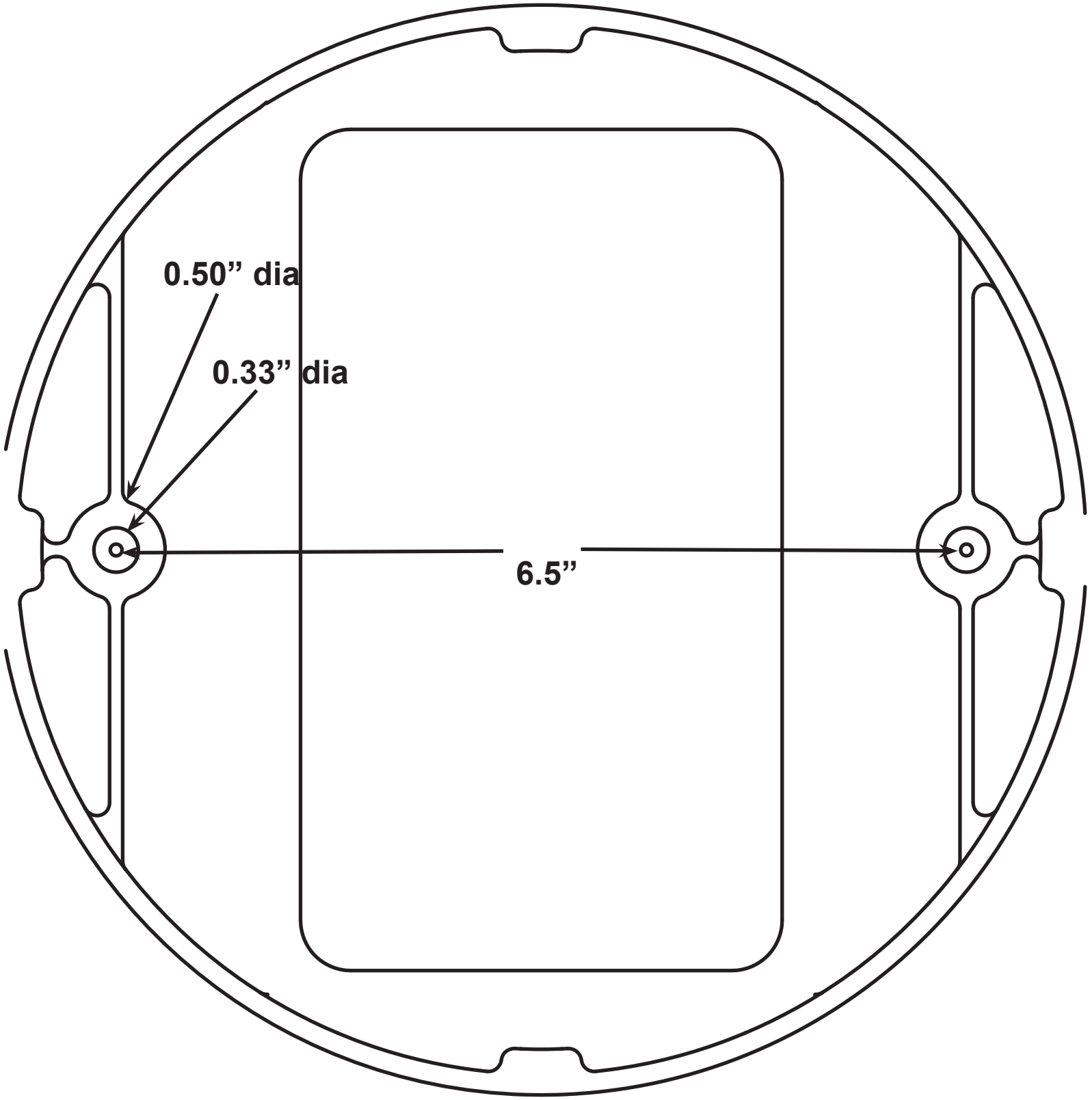

BOLBASE24 RETRO INSTRUCTIONS BLED12, 18, 24

Thank you for buying RAB lighting fixtures. Our goal is to design the best quality products to get the job done right. We'd like to hear your comments. Call the Marketing Department at 888-RAB-1000 or email: marketing@rabweb.com

IMPORTANT

READ CAREFULLY BEFORE INSTALLING FIXTURE. RETAIN THESE INSTRUCTIONS FOR FUTURE REFERENCE.

RAB fixtures must be wired in accordance with the National Electrical Code and all applicable local codes. Proper grounding is required for safety. THIS PRODUCT MUST BE INSTALLED IN ACCORDANCE WITH THE APPLICABLE INSTALLATION CODE BY A PERSON FAMILIAR WITH THE CONSTRUCTION AND OPERATION OF THE PRODUCT AND THE HAZARDS INVOLVED.

WARNING: Make certain power is OFF before installing or maintaining fixture. No user serviceable parts inside.

BOLBASE24 RETRO

CAUTION: Before drilling and mounting, make sure to align Bollard Base Retro in the orientation that will result in the desired Bollard Fixture orientation.

Retrofit Bollard Base for retrofit application for existing concrete or base (Bollards sold separately).

1. Drill the surface in the drilling location shown in the detailed dimensional drawings.
2. Feed the conduit through 2.45" dia hole of the **Retrofit Bottom Plate**. Place the **Retrofit Bottom Plate** on the mounting surface and tighten it with 4 screws.
3. Place **Retrofit Top Plate** on **Retrofit Bottom Plate** and tighten it with **Set Screws**.
4. Install Bollard on the **Retrofit Top Plate** using appropriate hardware.

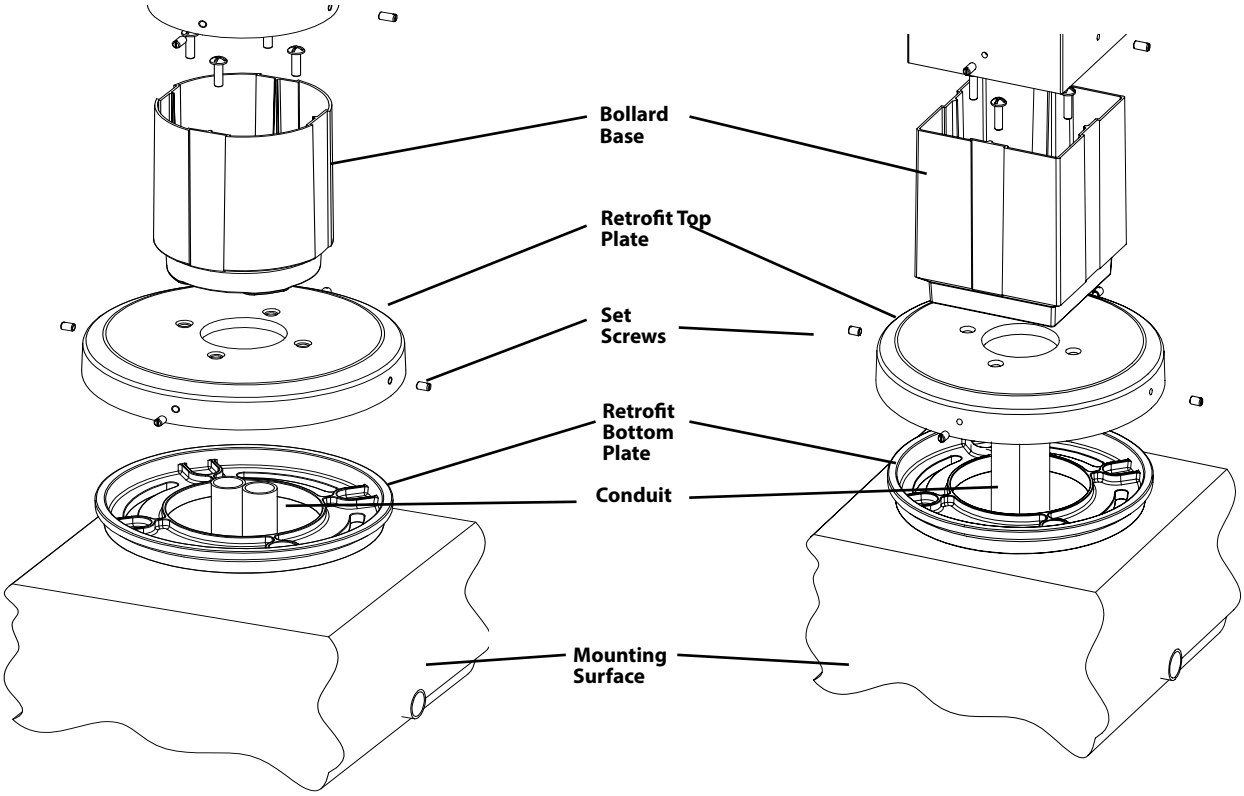

Note: These instructions do not cover all details or variations in equipment nor do they provide for every possible situation during installation, operation or maintenance.

BOLBASE24 RETRO INSTRUCTIONS BLED12, 18, 24

Thank you for buying RAB lighting fixtures. Our goal is to design the best quality products to get the job done right. We'd like to hear your comments. Call the Marketing Department at 888-RAB-1000 or email: marketing@rabweb.com

BASE PLATE TEMPLATE

Template not to scale. Use actual plate as template.

CAUTION: Before drilling and mounting, make sure to align Bollard Base Retro in the orientation that will result in the desired Bollard Fixture orientation.

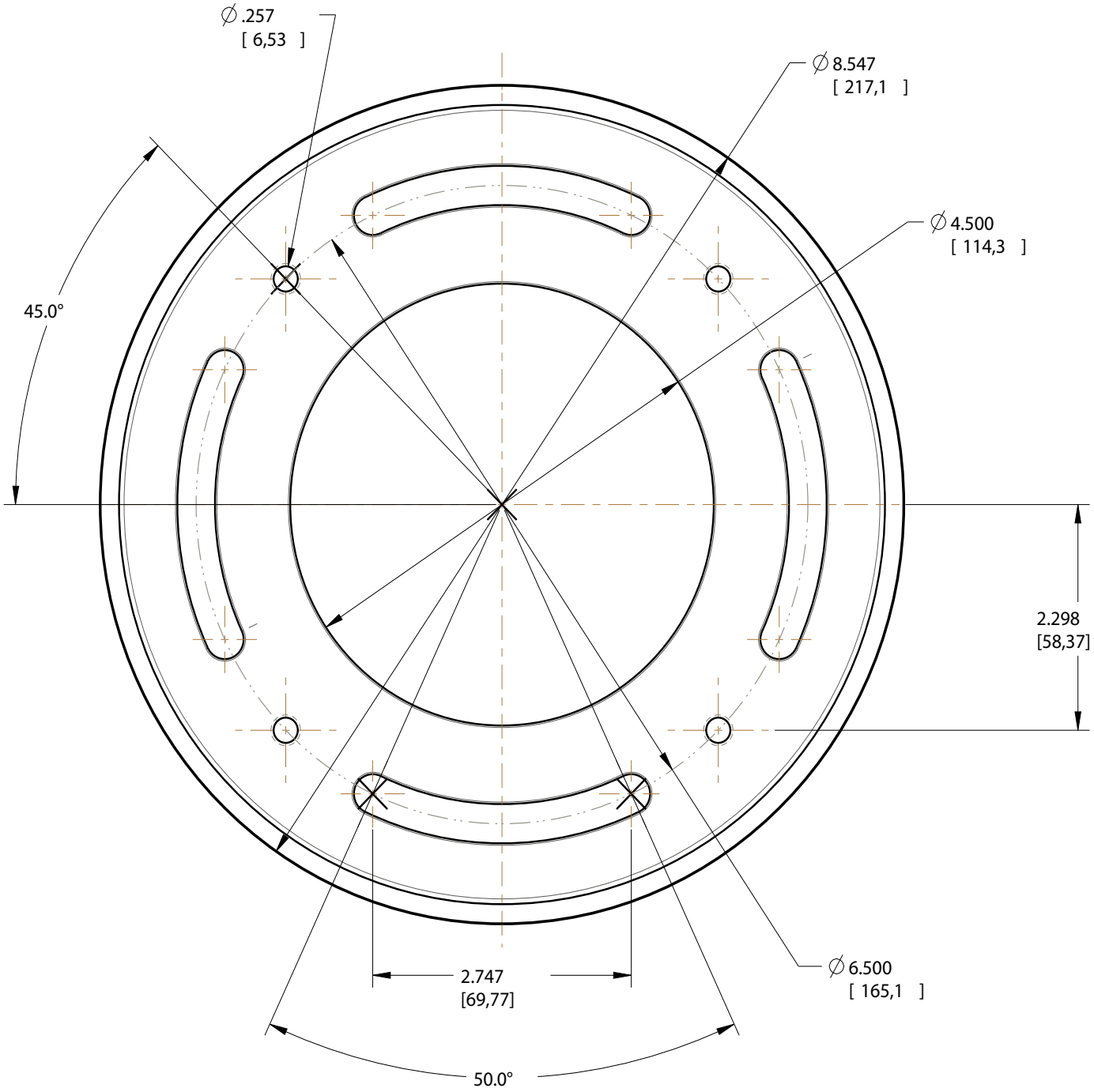

Easy Installation & Product Help

Tech Help Line
Call our experts 888 RAB-1000

rabweb.com
Visit our website for product info

email
Answered promptly sales@rabweb.com

©2014 RAB LIGHTING Inc.
Northvale, New Jersey 07647 USA

BOLBASE24 IN 0614