CLED2X13YBBW/PCS2



26 Watts of energy efficient ceiling mounted LED lighting. 100,000-hour LED lifespan. 5-year, no-compromise warranty. Flush mount fixture bracket. LED Light Engine included.

Color: White

Weight: 0.0 lbs

Project:	**Type:**
Prepared By:	**Date:**

Driver Info

Type	Constant Current
120V	N/A
208V	0.6A
240V	0.6A
277V	0.3A
Input Watts	30.1W

LED Info

Watts	26W
Color Temp	3000K (Warm)
Color Accuracy	86 CRI
L70 Lifespan	100,000 Hours
Lumens	2,960 lm
Efficacy	98.3 lm/W

Technical Specifications

Construction

CLED2X13 with Back Box:
Surface mounting box for CLED2X13

Thermal Management:
Cast aluminum Thermal Management system for optimal heat sinking. Designed for cool operation, most efficient output and maximum LED life by minimizing LED junction temperature.

Housing:
Precision die-cast aluminum housing, lens frame

Finish:
Formulated for high durability and long-lasting color

Green Technology:
Mercury and UV free. RoHS-compliant components.

Cold Weather Starting:
The minimum starting temperature is -40°C (-40°F)

Maximum Ambient Temperature:
Suitable for use in up to 40°C (104°F)

Electrical

Driver:
Multi-chip 13W high output long life LED Driver Constant Current, Class 2 100V - 277V, 50/60 Hz

Photocell:
277V Swivel photocell included. Photocell is compatible with 208V-277V.

Surge Protection:
4kV

Compliance

UL Listed:
Suitable for wet locations

IESNA LM-79 & LM-80 Testing:
RAB LED luminaires and LED components have been tested by an independent laboratory in accordance with IESNA LM-79 and LM-80.

Performance

Lifespan:
100,000-Hour LED lifespan based on IES LM-80 results and TM-21 calculations

Wattage Equivalency:
Equivalent to 42W CFL or 70W Metal Halide

LED Characteristics

Lumen Maintenance:
The LED will deliver 70% of its initial lumens at 100,000 hours of operation

Color Consistency:
3-step MacAdam Ellipse binning to achieve consistent fixture-to-fixture color

Color Stability:
LED color temperature is warrantied to shift no more than 200K in color temperature over a 5-year period

Color Uniformity:
RAB's range of Correlated Color Temperature follows the guidelines of the American National Standard for Specifications for the Chromaticity of Solid State Lighting (SSL) Products, ANSI C78.377-2017.

Other

Patents:
The design of the CLED is protected by U.S. Pat. D608,040, D615,689 , Canada Patent 821412 and patents pending in China, Taiwan and Mexico.

Warranty:
RAB warrants that our LED products will be free from defects in materials and workmanship for a period of five (5) years from the date of delivery to the end user, including coverage of light output, color stability, driver performance and fixture finish. RAB's warranty is subject to all terms and conditions found at rablighting.com/warranty.

Copyright © 2025 RAB Lighting All Rights Reserved Note: Specifications are subject to change at any time without notice

Technical Specifications (continued)

Installation

Mounting Accessory:

Surface mounting box available here.

Dimensions

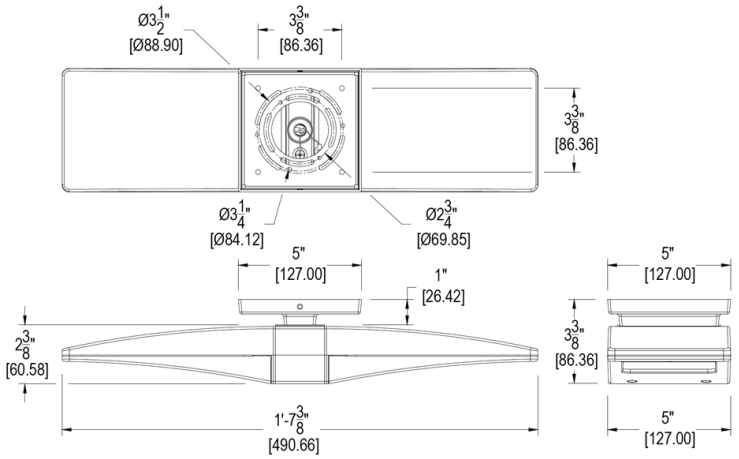

Features

- Flush mount fixture bracket
- Die cast aluminum lens frame with tempered glass and double gasketing
- Fully Shielded, Full Cutoff Optics
- LED Light Engine life delivers 70% of rated lumens at 100,000-hours
- Great for parking garages, canopies, stairwells and entrance ways
- LM-70 and LM-80 tested
- 5-Year, No-Compromise Warranty

Copyright © 2025 RAB Lighting All Rights Reserved Note: Specifications are subject to change at any time without notice