CLEDBB



Surface mounting box for CLED

Weight: 0.9 lbs

Project:	Type:
Prepared By:	**Date:**

Technical Specifications

Performance

Description:

Surface mounting box for CLED 2x10, 13, 20 & 26

Compliance

Trade Agreements Act Compliant:

This product is a product of Cambodia and a "designated country" end product that complies with the Trade Agreements Act

Electrical

THD:

11.2% at 120V, 15.944% at 277V

Copyright © 2025 RAB Lighting All Rights Reserved Note: Specifications are subject to change at any time without notice

Dimensions

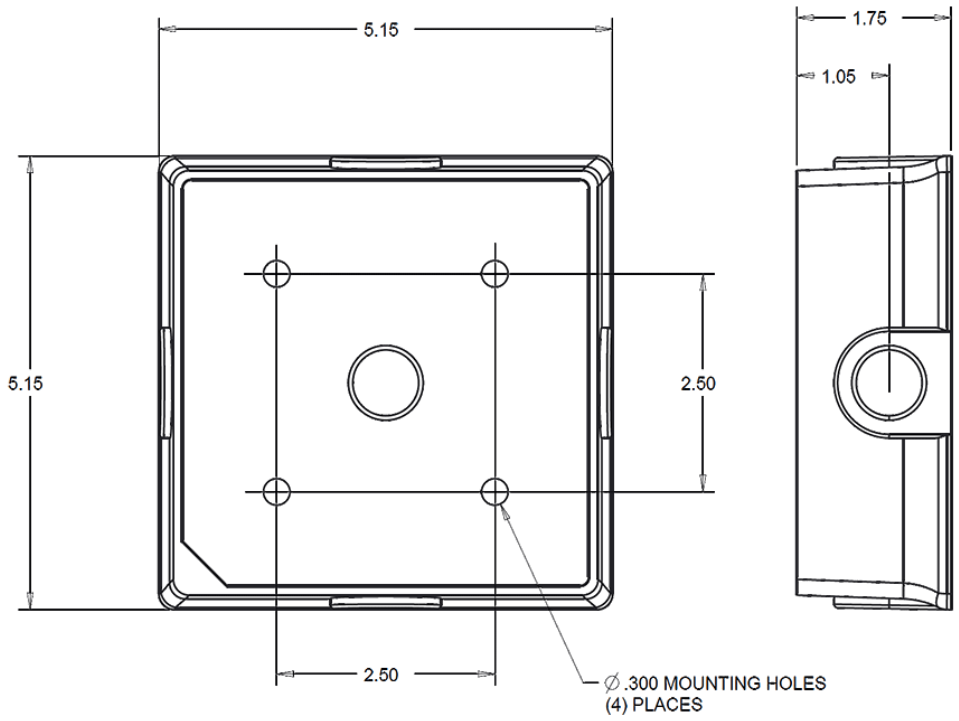

Copyright © 2025 RAB Lighting All Rights Reserved Note: Specifications are subject to change at any time without notice